Form No. 3327-516 Rev B

TORO®

1800 Power Curve®

Snowthrower

Model No. 38025—250000001 and Up

Operator's Manual

Original Instructions (EN)

Contents

	Page
Introduction	2
Important Safety Instructions	3
Safety and Instruction Decals	4
Assembly	4
Installing the Upper Handle and Chute Crank	4
Installing the Discharge Chute	5
Before Starting	6
Unlocking the Snowthrower	6
Securing the Power Supply Cord	6
Operation	7
Starting and Stopping	7
Operating Tips	7
Maintenance	9
Lubricating the Snowthrower	9
Replacing the Scraper	9
Replacing the Rotor	9
Replacing the Large Belt	10
Replacing the Small Belt	11
Storage	11
Toro Service Support	11
Warranty	Back Cover

Introduction

Read this manual carefully to learn how to operate and maintain your product properly. The information in this manual can help you and others avoid injury and product damage. Although Toro designs and produces safe products, you are responsible for operating the product properly and safely.

You may contact Toro directly at www.Toro.com for product and accessory information, help finding a dealer, or to register your product.

Whenever you need service, genuine Toro parts, or additional information, contact an Authorized Service Dealer or Toro Customer Service and have the model and serial numbers of your product ready. Figure 1 illustrates the location of the model and serial numbers on the product.

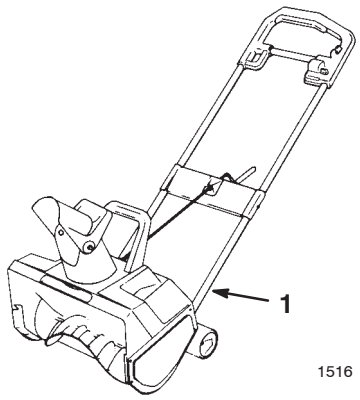

Figure 1

1. Location of the model and serial numbers

Write the product model and serial numbers in the space below:

Model No. _____

Serial No. _____

This manual identifies potential hazards and has special safety messages that help you and others avoid personal injury and even death. ***Danger***, ***Warning***, and ***Caution*** are signal words used to identify the level of hazard. However, regardless of the hazard, be extremely careful.

Danger signals an extreme hazard that **will** cause serious injury or death if you do not follow the recommended precautions.

Warning signals a hazard that **may** cause serious injury or death if you do not follow the recommended precautions.

Caution signals a hazard that may cause minor or moderate injury if you do not follow the recommended precautions.

This manual uses 2 other words to highlight information. **Important** calls attention to special mechanical information and **Note:** emphasizes general information worthy of special attention.

© 2005 by The Toro Company

8111 Lyndale Avenue South
Bloomington, MN 55420-1196

Contact us at www.Toro.com
All Rights Reserved
Printed in the USA

IMPORTANT SAFETY INSTRUCTIONS

When using an electrical appliance, basic precautions should always be followed, including the following:

READ ALL INSTRUCTIONS BEFORE USING THIS APPLIANCE

WARNING—To reduce the risk of fire, electric shock, or injury, follow these safety instructions.

It is essential that you or any other operator of the appliance read and understand the contents of this manual before operating the appliance. Pay particular attention to the safety alert symbol ⚠ which means CAUTION, WARNING or DANGER—personal safety instruction. Read and understand the instruction because it has to do with safety. **Failure to comply with these instructions may result in personal injury, risk of fire, or electrical shock.**

Replacement parts—When servicing use only identical replacement parts. Replace or repair damaged cords.

Do not use on graveled surface unless the snowthrower is adjusted for such a surface in accordance with the operator's manual.

Keep children and bystanders away—All visitors should be kept at a distance from the work area.

Dress properly—Do not wear loose clothing or jewelry. They can be caught in moving parts.

Wear rubber boots when operating the snowthrower.

Operation of the snowthrower in the hand-held position is unsafe, except in accordance with the special instructions for such use provided in the operator's manual.

Warning—To prevent electric shock, use only with an extension cord suitable for outdoor use. (Does not apply to battery-operated snowthrowers.)

Extension cords—To prevent disconnection of the extension cord during operation, tie it to the loop in the upper handle before connecting it to the snowthrower (Fig. 7).

Avoid accidental starting—Don't carry the snowthrower with your finger on the switch. Be sure switch is off when plugging in.

If cord is damaged in any manner while plugged in, pull extension cord from wall receptacle.

Don't abuse cord—Never carry snowthrower by cord or yank it to disconnect from receptacle. Keep cord from heat, oil, and sharp edges. (Does not apply to battery-operated snowthrowers.)

Keep hands away from moving parts.

Keep guards in place and in working order.

Don't force snowthrower—It will perform better and safer at the rate for which it was designed.

Don't overreach—Keep proper footing and balance at all times.

If the snowthrower strikes a foreign object, follow these steps:

- Stop the snowthrower.
- Inspect for damage.
- Repair any damage before restarting and operating the snowthrower.

Disconnect snowthrower—Disconnect the snowthrower from the power supply when not in use, before servicing, when changing accessories, and the like.

Store idle snowthrowers indoors—When not in use, snowthrowers should be stored indoors in dry, locked place—out of reach of children.

Maintain snowthrowers with care—Follow instructions for lubricating and changing accessories.

SAVE THESE INSTRUCTIONS

Safety and Instruction Decals

Safety decals and instructions are easily visible to the operator and are located near any area of potential danger. Replace any decal that is damaged or lost.

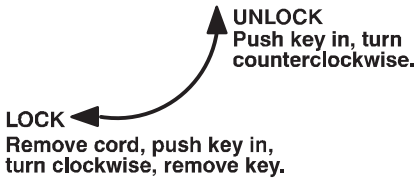

On Handle



73-0460

1. Read the Operator's Manual.
2. Electrocution
3. Cutting/dismemberment of foot, auger
4. Cutting/dismemberment of fingers/hand, impeller

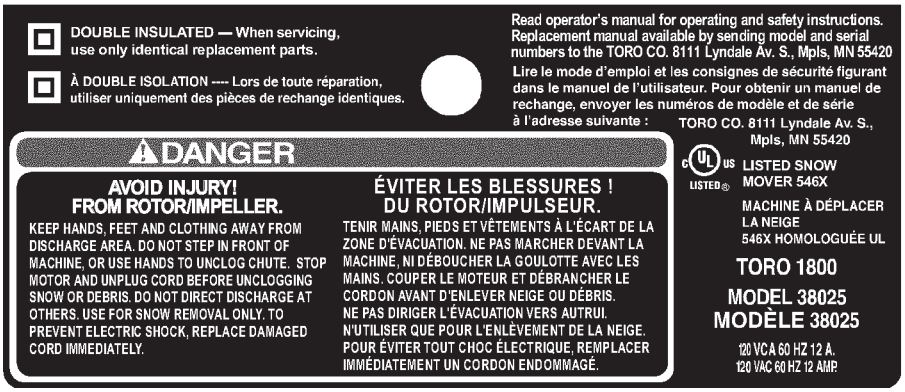

104-9382

Assembly

Note: Determine the left and right hand sides of the snowthrower by standing in the normal operating position.

Installing the Upper Handle and Chute Crank

1. Stand the snowthrower on its wheels and position the upper handle. Inspect the open internal wiring. If it is damaged, do not assemble. Contact your Authorized Service Dealer.

Caution

Internal wiring could be damaged during assembly. Damaged wiring can cause serious personal injury when operating the snowthrower.

- **Carefully assemble the snowthrower so that you will not damage the electrical wiring.**
- **If wiring is damaged, do not assemble the snowthrower. Contact your Authorized Service Dealer.**

2. Carefully insert the right side of the upper tubing **over** the end of the lower right side tubing (Fig. 2).

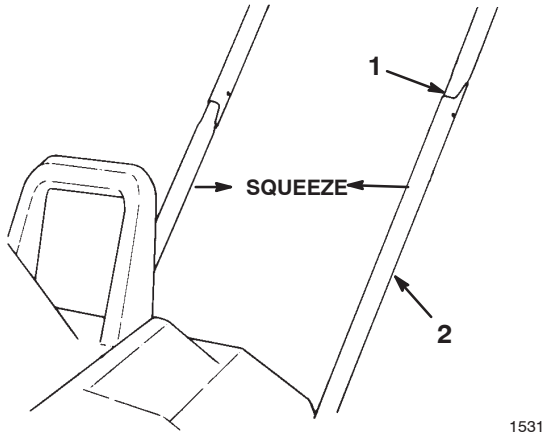

Figure 2

1. Upper tubing
2. Lower tubing

3. Carefully insert the left side of the upper tubing **into** the end of the lower left side tubing (Fig. 2).

4. Squeeze the upper tubes together, and wiggle the upper tubes down until the mounting holes in the upper and lower tubing line up (Fig. 2).

5. Place the mounting plate over the tubes (Fig. 3). Align the mounting plate holes with the upper and lower tubing holes.

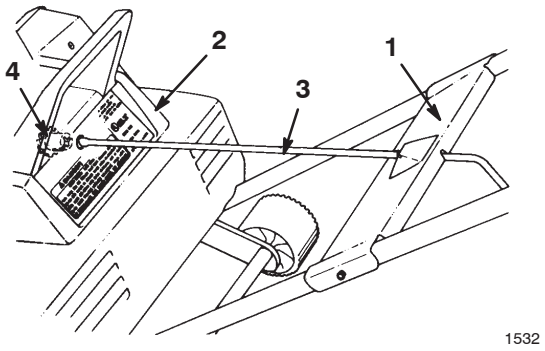

Figure 3

1. Mounting plate
2. Shroud
3. Chute crank
4. Gear

6. Insert the end of the chute crank through the hole in the shroud. Turn the chute crank rod **lightly** until the flattened end drops into the slot in the gear. Firmly push the chute crank into the gear until it snaps into place (Figs. 3 and 4).

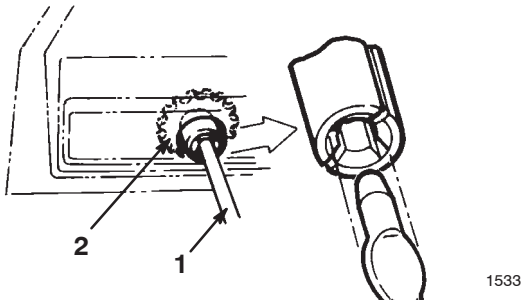

Figure 4

1. Chute crank
2. Chute crank gear

7. Secure the upper and lower tubing and the mounting plate together with 2 machine screws and locknuts.

Note: Position the screw heads on the outside of the mounting plate. **Be careful not to damage the internal electrical wiring when you insert the screws.** If the wiring blocks the hole, use a blunt 1/8-in. punch to carefully route the electrical wiring away from the aligned holes.

Installing the Discharge Chute

1. Position the chute deflector onto the discharge chute and align the mounting holes (Fig. 5).

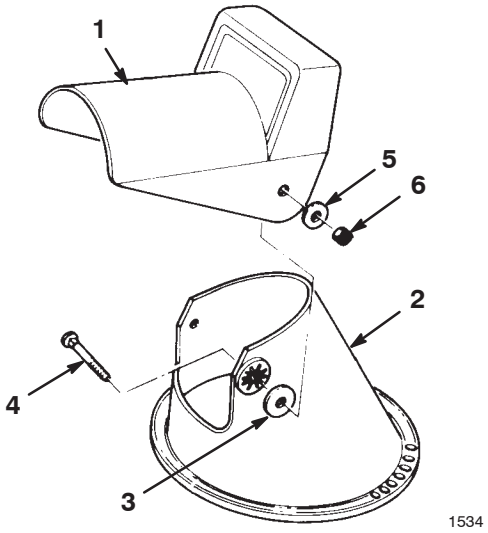

Figure 5

1. Chute deflector
2. Discharge chute
3. Rubber washer (2)
4. Carriage bolt (2)
5. Metal washer (2)
6. Locknut (2)

2. Insert 2 rubber washers between the chute deflector and the discharge chute while maintaining the hole alignment (Fig. 5).

3. Secure the deflector to the discharge chute with 2 carriage bolts, metal washers, and locknuts.

Note: Ensure that the square shoulders on the carriage bolts align with the inside square on the discharge chute. Position the metal washers to the outside of the chute deflector as shown in Figure 5. **Do not overtighten the bolts.**

Before Starting

Unlocking the Snowthrower

To unlock the snowthrower, push the key into the hole (Fig. 6), hold the key down, and turn the key counterclockwise.

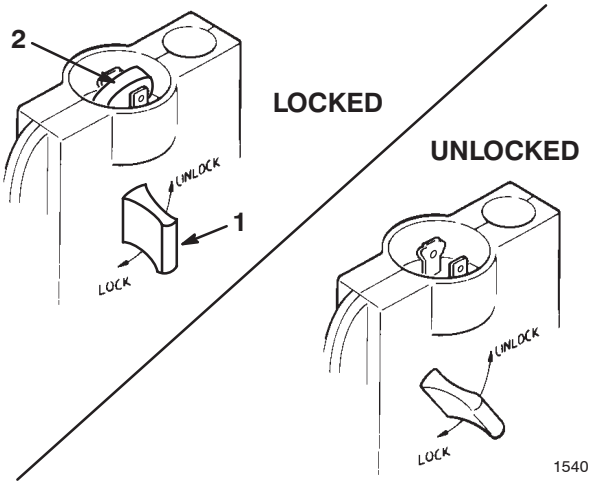

Figure 6

1. Key
2. Interlock tab

Note: When you turn the key counterclockwise, the interlock tab (a safety device that prevents an unauthorized person from using the snowthrower) rotates away from the prongs and allows you to plug the extension cord into the snowthrower (Fig. 6).

Note: Do not attempt to remove the key when it is in the unlocked position.

Securing the Power Supply Cord

For safe and efficient use of your appliance, use only a UL-listed extension cord recommended for outdoor use. Refer to the Extension Cord Chart that follows.

Extension Cord Chart		
If length of extension cord is less than or equal to:	100 ft. (30 m)	150 ft. (46 m)
Assure wire size gauge (A.W.G.) in cord is:	16	14

Note: Do not use an extension cord longer than 150 feet (46 m).

Warning

Contact with water while operating the snowthrower can cause electric shock, resulting in personal injury or death.

- **Don't handle the plug or the appliance with wet hands or while standing in water.**
- **Use only a UL-listed extension cord recommended for outdoor cold weather use. Refer to the *Extension Cord Chart* on page 6.**

Note: To prevent the extension cord from disconnecting during operation, tie it to the loop in the upper handle before you connect it to the snowthrower (Fig. 7).

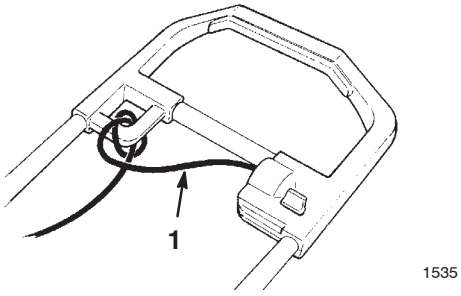

Figure 7

1. Extension cord

Warning

The electrical cord can get damaged, causing a shock or fire.

Thoroughly inspect electrical cord before using the snowthrower. If the cord is damaged, do not operate the snowthrower. Replace or repair the damaged cord immediately. Contact your Authorized Service Dealer for assistance.

Your snowthrower has a polarized plug, with one prong in the handle socket being larger than the other (Fig. 8). When you insert the end of a suitable extension cord into

the handle socket, insert the enlarged prong into the wide slot in the extension cord end. Refer to Important Safety Instructions on page 3 for additional information.

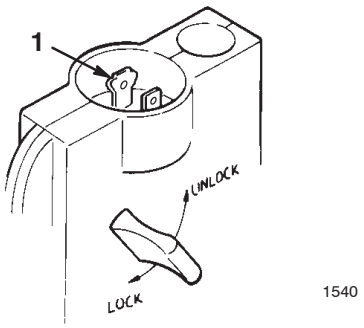

Figure 8

1. Enlarged prong

Operation

Check the condition of the snowthrower before operating it. Ensure that the rotor turns freely.

Starting and Stopping

1. To start the rotor, squeeze the control bar (Fig. 9).

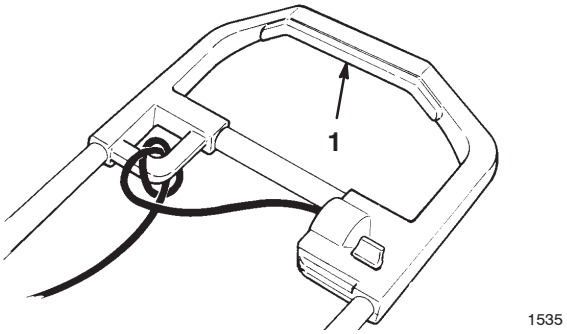

Figure 9

1. Control bar

2. To stop the rotor, release the control bar.

Operating Tips

Warning

If snowthrower hits a foreign object while in operation, the object could be thrown in operator's or bystander's direction. Thrown objects could cause serious personal injury.

Keep the area to be cleared free of all foreign objects which may be picked up and thrown by the rotor blades.

- Always keep children and pets away from the area of operation.
- Keep the area to be cleared free of stones, toys, or other foreign objects which the rotor blades can throw. Such items could be covered by snowfall and go unnoticed. If the snowthrower strikes an obstruction or a foreign object during operation, stop the snowthrower, unplug the extension cord, remove the obstruction, and check the snowthrower for damage.
- To adjust the discharge chute, rotate the chute crank clockwise to move the discharge chute to the left; counterclockwise to move the chute to the right.

  Note: The chute crank makes a noise as you turn the crank. This is normal.

  The deflector handle on top of the discharge chute controls the height of the snow stream (Fig. 10). Adjust the height of the snow stream by raising or lowering the chute deflector.

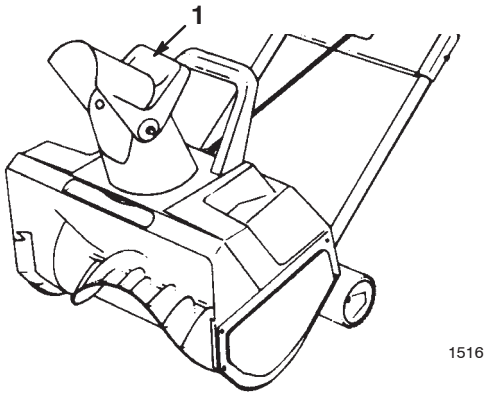

Figure 10

1. Chute deflector handle

Warning

A gap between the discharge chute and the chute deflector may allow snow and anything that can be picked up by snowthrower to fly in the direction of the operator. Thrown objects could cause serious personal injury.

- **Do not force the chute deflector too far forward so that a gap appears between the discharge chute and chute deflector.**
- **Do not overtighten the locknuts that hold the chute deflector in place so that you need to use excessive force to adjust the chute deflector.**

- Begin removing snow near the electrical outlet and work outward. Blow back and forth, not away from and toward the outlet.
- When turning at the end of a swath, step over the cord and turn the snowthrower.
- Always overlap each swath and discharge the snow downwind when possible.
- Shave down large banks of snow by placing the snowthrower on the bank. Lift the snowthrower by the primary and secondary handles only (Fig. 11). Let the weight of the snowthrower shave down the bank in a back-and-forth motion.

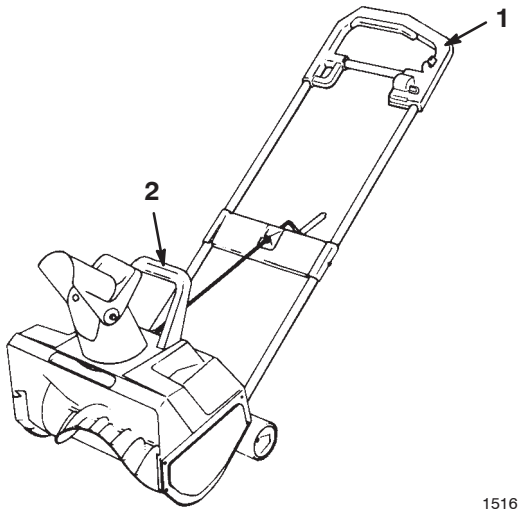

Figure 11

1. Primary handle
2. Secondary handle

- When clearing steps or deep drifts, hold the snowthrower by the primary and secondary handles (Fig. 11) and use a swinging or sweeping motion.

Warning

When using the secondary handle, never direct the snow discharge chute at the operator or at bystanders. The snowthrower can throw foreign objects and cause serious personal injury.

When using the secondary handle, always turn the discharge chute in the opposite direction from where you or bystanders are standing.

- Keep the extension cord clear of obstructions, sharp objects, and all moving parts. Do not pull sharply on cord or abuse it in any manner. Frequently inspect the extension cord for damage that may result in an electric shock. If the extension cord becomes damaged in any way, replace it.
- In some cold and snowy weather conditions, some controls and moving parts may freeze. Therefore, when any control becomes hard to operate, stop the motor, disconnect the extension cord, and check for frozen parts. **Do not use excessive force when trying to operate frozen controls.** Free all the controls and moving parts before operating.
- When operating the snowthrower, keep the wheels 1 inch (2.5 cm) off the pavement by tipping the snowthrower forward. This helps prevent the snow from building up on the wheels.
- After clearing the snow, let the motor run for a few minutes so that the ice doesn't freeze any moving parts. Then shut off the motor, wait for all moving parts to stop, and wipe the ice and snow off the snowthrower. Rotate the chute crank several times to remove the snow from the snowthrower.
- Lock the snowthrower when you are not using the snowthrower. Disconnect the extension cord. Hold the key down, turn it clockwise and remove it from the handle to prevent an unauthorized person from using the snowthrower.

Maintenance

Note: Determine the left and right sides of the snowthrower by standing in the normal operating position.

Warning

If the extension cord is plugged into the snowthrower and the key is in the handle, someone could accidentally operate snowthrower while you are performing maintenance on it, causing serious personal injury.

Disconnect the extension cord before you perform any maintenance. Hold the key down, turn it clockwise and remove it from the handle.

Lubricating the Snowthrower

You do not need to lubricate the snowthrower; all the bearings were lubricated at the factory for the life of the snowthrower.

Replacing the Scraper

The scraper is located at the bottom of the rotor housing as shown in Figure 12.

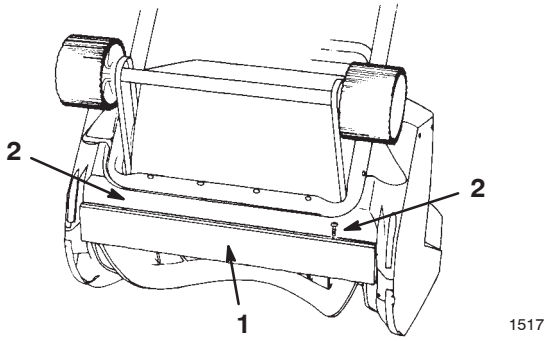

Figure 12

1. Scraper
2. Screw

1. Remove the 2 screws that secure the scraper to the snowthrower (Fig. 12).

2. Install the new scraper and fasten it securely with 2 screws.

Replacing the Rotor

1. Remove the 3 screws that secure the right side cover and the skid to the snowthrower frame (Fig. 13).

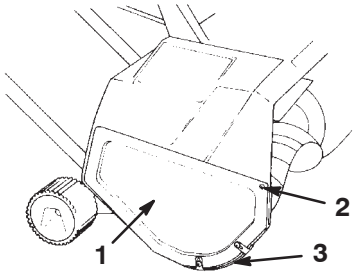

Figure 13

1. Right side cover
2. Screw
3. Skid

2. Using a 5/16-inch Allen wrench, turn the rotor shaft clockwise (left-hand thread) while holding the rotor (Fig. 14).

Note: You may need to tap the Allen wrench with a hammer to loosen the rotor shaft. Wedge a stick or a hammer handle in the rotor to prevent it from rotating.

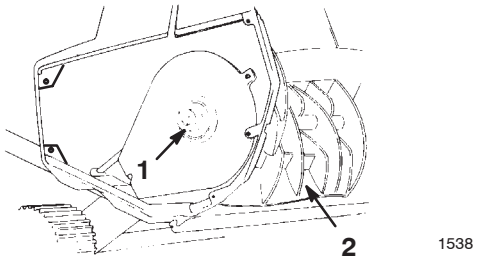

Figure 14

1. Rotor shaft
2. Rotor

Note: If you cannot remove the rotor shaft by holding the rotor, remove the left side cover and the skid (Fig. 15). Hold the hex nut with a 7/8-inch wrench while unscrewing the rotor shaft (Fig. 16).

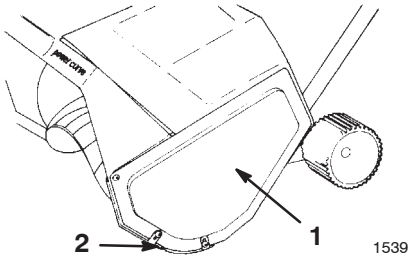

Figure 15

1. Left side cover
2. Skid

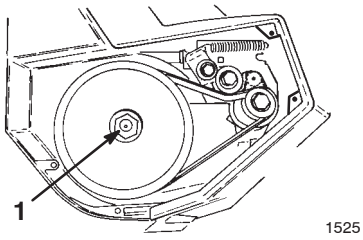

Figure 16

1. Hex nut

3. Hold the rotor and pull out the rotor shaft.

4. Remove the rotor.

5. Align the left side of the new rotor with the coupler. The 3 bosses on the rotor end must align with the slots on the coupler (Fig. 17).

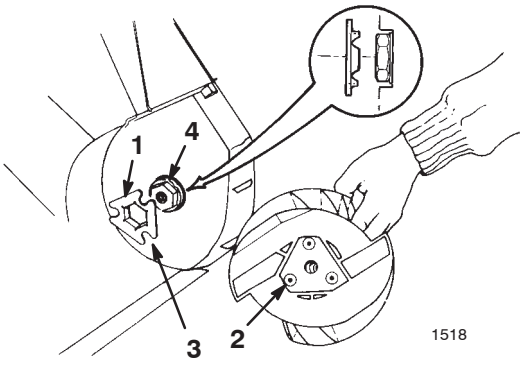

Figure 17

1. Coupler
2. Boss
3. Slot
4. Drive hex

Note: When mounting the coupler to the drive hex, align the coupler tabs to the **inside**.

6. Slide the right side of the rotor into the mounting position.

7. Insert the rotor shaft through the rotor. Ensure that the shaft fits into the bearing on the right side. Torque it to at least 10 ft-lb (14 N·m).

8. Install the cover and the skid.

Replacing the Large Belt

1. Remove the 3 screws that secure the left side plate to the snowthrower frame (Fig. 15). Remove the side plate and the skid.

Caution

The idler spring could fly in your face while you remove it, causing personal injury.

Wear safety goggles when working with the idler spring.

2. Remove the idler spring from the idler arm (Fig. 18).

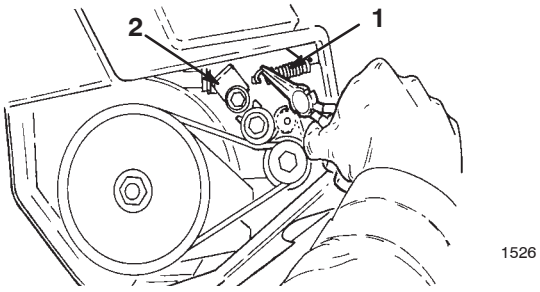

Figure 18

1. Idler spring
2. Idler arm

3. Rotate the rotor with your left hand while sliding the belt off the large pulley with your right hand (Fig. 19).

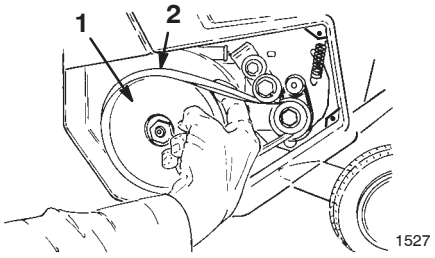

Figure 19

1. Large pulley
2. Belt

4. Slip the new belt over the small pulley (Fig. 20).

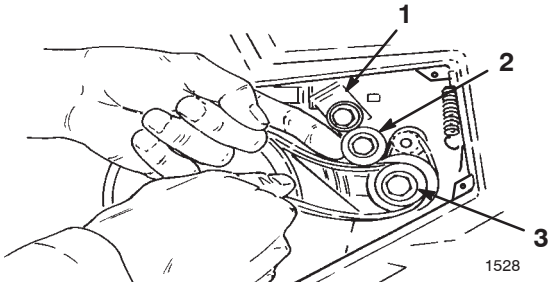

Figure 20

1. Idler arm
2. Idler pulley
3. Small pulley

5. Lift up the idler arm and slip the belt under the idler pulley (Fig. 20).

6. Rotate the rotor with your left hand while sliding the belt onto the large pulley with your right hand (Fig. 21).

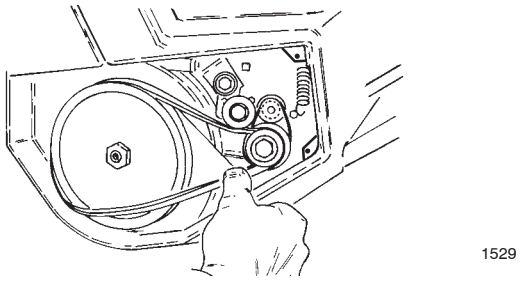

Figure 21

7. Assemble the idler spring (Fig. 18), making sure the idler pulley rides on the belt.

8. Install the left side cover and the skid with the 3 screws.

Replacing the Small Belt

1. Remove the screws that secure the left side plate and the skid to the snowthrower frame (Fig. 15), and remove the side plate and the skid.

2. Remove the large belt by slowly sliding it off the small pulley (Fig. 19). Refer to steps 2 and 3 of Replacing the Large Belt on page 10.

3. Remove the small pulley bolt (left hand thread) by turning the bolt clockwise.

4. Remove the 2 washers and the small pulley (Fig. 22).

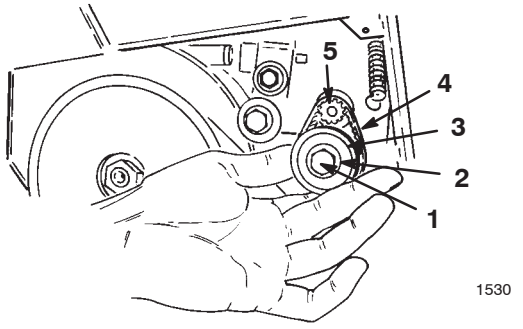

Figure 22

1. Bolt (left hand thread)
2. Washers
3. Small pulley
4. Small belt
5. Motor shaft pulley

5. Remove and discard the small belt (Fig. 22).

6. Slide 2 washers onto the bolt and insert the bolt through the small pulley.

Note: The bolt must ride on bearings in the small pulley.

7. Place the new belt on the small pulley.

8. Slide the belt over the motor shaft pulley (Fig. 22).

9. When tightening the bolt, the bolt head and the washers must be flush against the small pulley. Torque the bolt to 25 to 30 in-lb (2.8 to 3.4 N·m). **Do not overtighten the bolt.**

10. Slip the large belt over the small pulley (Fig. 21). Refer to step 4 through 8 of Replacing the Large Belt on page 10.

Storage

1. Run the snowthrower for a few minutes to melt away any snow on the snowthrower.

2. Disconnect the extension cord from the snowthrower.

3. Examine the extension cord thoroughly for signs of wear or damage. Replace it if it is worn or damaged.

4. Examine the snowthrower thoroughly for worn, loose, or damaged parts. For repairing or replacing parts, contact your local Authorized Service Dealer for assistance.

5. Store the extension cord with the snowthrower.

6. Store the snowthrower in a clean, dry place. Cover it to provide protection.

Toro Service Support

If your snowthrower requires service or maintenance, your nearest Toro Master Service Dealer is the best dealer to assist you. Refer to the “Yellow Pages” of your local telephone directory in the section titled “Lawn Mowers.” Toro Master Service Dealers are listed under the Toro trademark. If you need help locating a Toro Master Service Dealer near you, call 1-800-421-9684 for assistance.

The Toro Promise – Electric Snowthrowers and Brooms

A Two-Year Full Warranty for Residential Use for the United States and Canada

The Toro Company and its affiliate, Toro Warranty Company, pursuant to an agreement between them, jointly warrant this product for two years against defects in material or workmanship when used for normal residential purposes.

- If you have questions or problems, or before returning this product, call toll free: 1–800–808–2963 (US) or 1–800–808–3072 (Canada).
- To receive a replacement or repair, at our option, return the complete unit, postage prepaid, to the seller. **Only** United States customers may return their product, with proof of purchase, to any Authorized Service Dealer, Master Service Dealer, or the Toro Service Center, 21350 Cedar Avenue S., Lakeville, MN 55044–9090.

This warranty covers product defects only. **Neither The Toro Company nor Toro Warranty Company is liable for indirect, incidental or consequential damages in connection with the use of the Toro Products covered by this warranty, including any cost or expense of providing substitute equipment or service during reasonable periods of malfunction or non-use pending completion of repairs under this warranty. Some states do not allow exclusions of incidental or consequential damages, so the above exclusions may not apply to you.** This warranty gives you specific legal rights, and you may also have other rights which vary from state to state.

Countries Other than the United States and Canada

Customers who have purchased Toro products exported from the United States or Canada should contact their Toro Distributor (Dealer) to obtain guarantee policies for your country, province, or state. If for any reason you are dissatisfied with your Distributor's service or have difficulty obtaining guarantee information, contact the Toro importer. If all other remedies fail, you may contact us at Toro Warranty Company.

Part No. 374-0071