Form No. 3353-614 Rev B

Super Recycler®
Lawn Mower
Model Nos. 20056 and 20058

Setup Instructions

Important: Refer to the *Operator's Manual* for more information on setting up the mower.

Install the blade control bar into the upper handle.

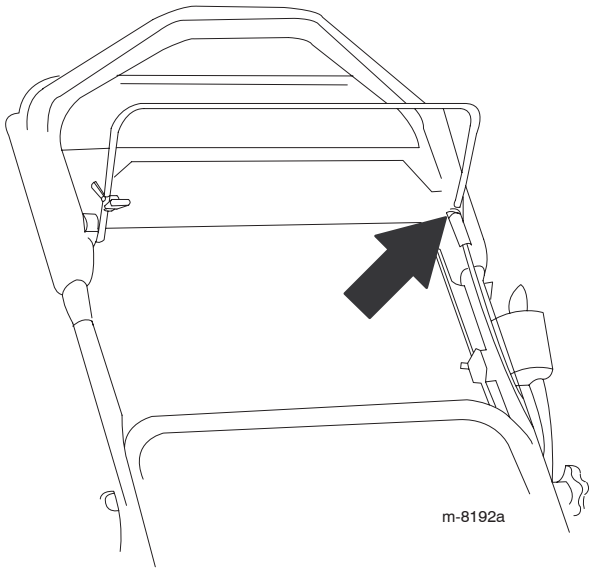

© 2005 by The Toro Company
8111 Lyndale Ave., Bloomington, MN 55420, USA

Printed in the USA
All Rights Reserved

Original Instructions (EN)
Register your product at www.toro.com