Form No. 3352–124 Rev. B

Flow Combining Kit

Groundsmaster® 580–D

Model No. 30614

Installation Instructions

Note: If a front–mounted implement, such as a broom or snowthrower, is used with the Groundsmaster 580–D, the Flow Combining Kit must be installed on the machine. The Flow Combining Kit lets you direct all the oil flow to the front implement by shutting off the flow of oil to the wing units. Complete oil flow to the front implement is required to assure the implement gets maximum power.

Remove the Rear Panel and the Battery

1. Park the machine on a level surface, lower all the cutting units, shut engine off and engage the parking brake
2. Open the hood and prop it up. Unlatch and remove the left and right engine panels.

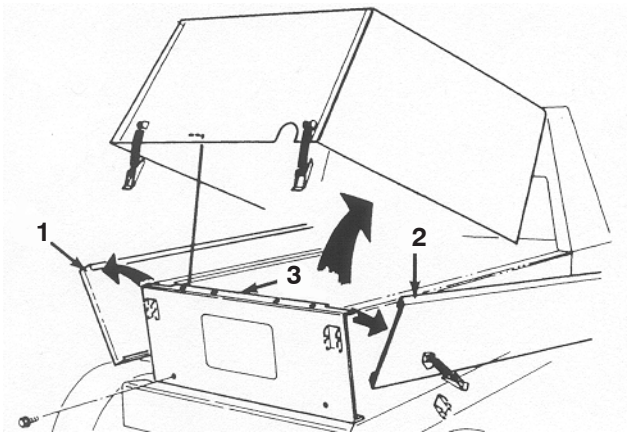

Figure 1

1. Left engine panel
2. Right engine panel
3. Rear panel

3. Remove the (6) flangehead screws securing the rear panel to the frame (Fig. 1). Set the rear panel aside.
4. Remove the (2) screws retaining the battery tray to the battery base (Fig. 2). Slide the battery tray out to the side. This gives you more space to work on the hydraulic system.

Drain the Oil from the Pump and Remove the Elbows

1. Put an oil pan below the fixed tandem oil gear pump.
2. Disconnect the hoses from the fittings on the right front and the rear of the pump. Also, disconnect the hoses from the fittings on the PTO manifold, as shown in figure 3.

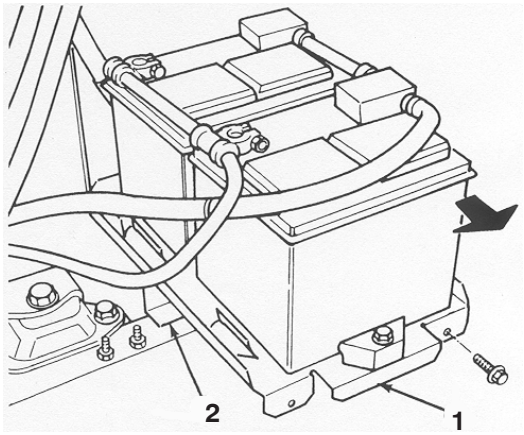

Figure 2

1. Battery tray
2. Battery base

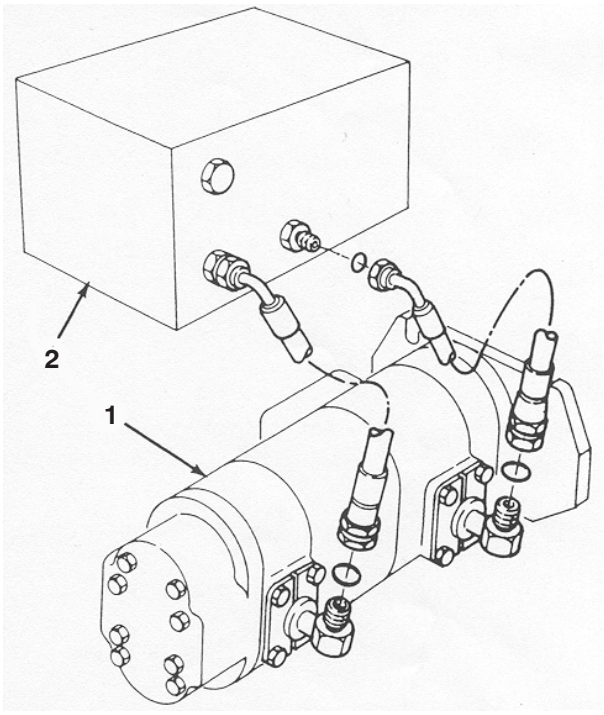

Figure 3

1. Pump
2. PTO Manifold

© 2005 by The Toro Company
8111 Lyndale Avenue South
Bloomington, MN 55420-1196

All Rights Reserved
Printed in the USA

3. Remove the 90 degree fitting from the right front and the rear of the pump (Fig. 4). However, the two–piece mounting flange that held the rear fitting to the pump will be used later. The other two–piece mounting flange will not be used.

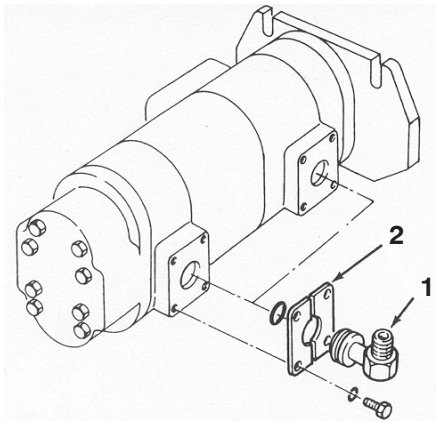

Figure 4

1. 90 degree fitting
2. Mounting flange

Install the Flow Combining Valve

1. Install the 90 degree fitting and the O–ring into the top port on the flow combining valve (Fig. 5).
2. Remove the plug from the top of the valve and install the 90 degree fitting and the O–ring into the port (Fig. 5).
3. Install the straight fitting and the O–ring into the bottom port on the side of valve (Fig. 5).

Note: The fittings may need a slight adjustment when the hydraulic hoses are eventually installed.

4. Mount the flow combining valve and O–ring to the front port, on the side of the pump, with (4) socket head capscrews. Position the components as shown in figure 5. The arrow on the valve must point up to assure proper installation.

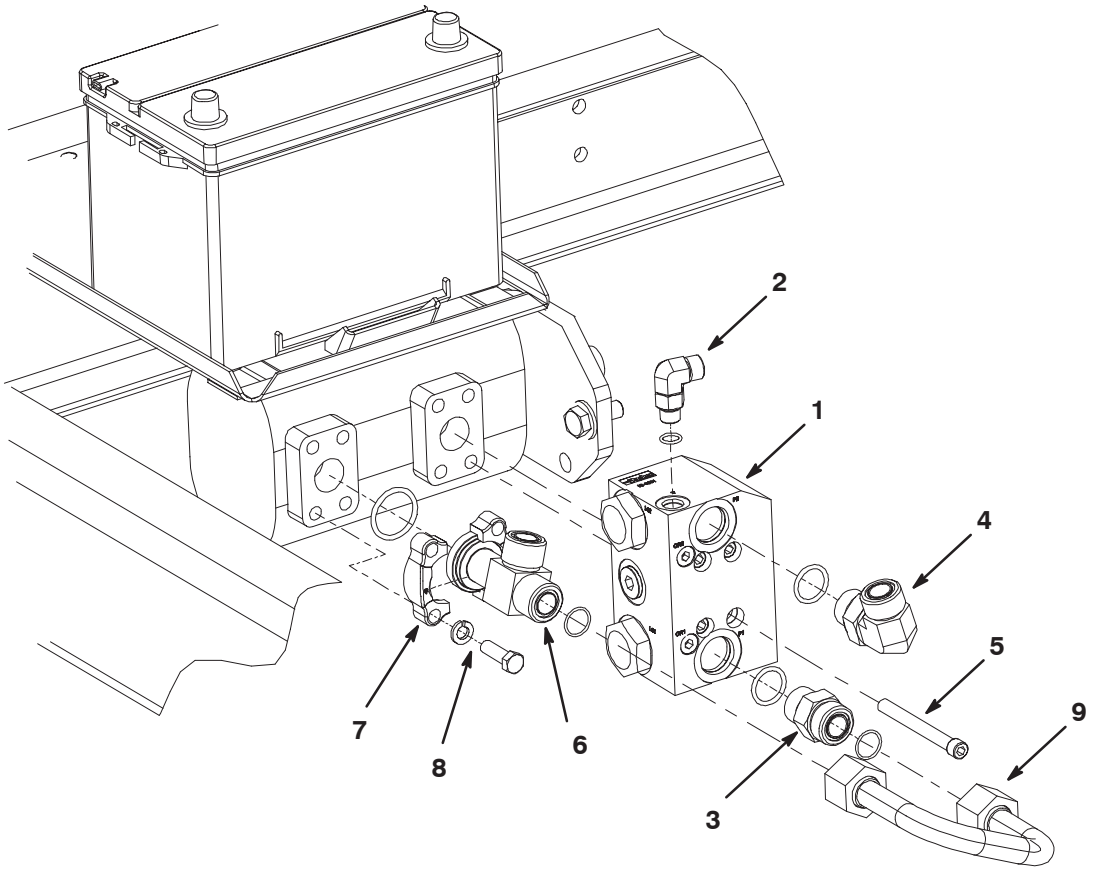

Figure 5

1. Flow combining valve
2. 90 degree fitting
3. Straight fitting
4. 90 degree fitting
5. Socket head capscrew
6. T–fitting
7. Mounting flange
8. Capscrew & lockwasher
9. U–shaped hydraulic tube

Install the Fittings and U–Shaped Hydraulic Tube

1. Install the T–fitting and the O–ring in the port at the left rear of the pump, using the existing two–piece mounting flange, (4) lockwashers and capscrews (Fig. 5).
2. Connect the U–shaped hydraulic tube and the O–rings to the end of the T–fitting and the straight fitting at the front of the flow combining valve (Fig. 5).

Note: The 90 degree fitting may need a slight adjustment when the hydraulic hose is eventually installed.

3. Remove the plug from the top left rear port in the PTO manifold and install the 90 degree fitting and the O–ring into the port (Fig. 6).
4. If the PTO manifold fittings, that the (2) hoses were disconnected from are straight fittings, remove the fittings and proceed to step 5. If the fittings are 45 degree fittings, proceed to step 6.
5. Install (2) 45 degree fittings into the PTO manifold ports where the straight fittings were previously installed (Fig. 6).

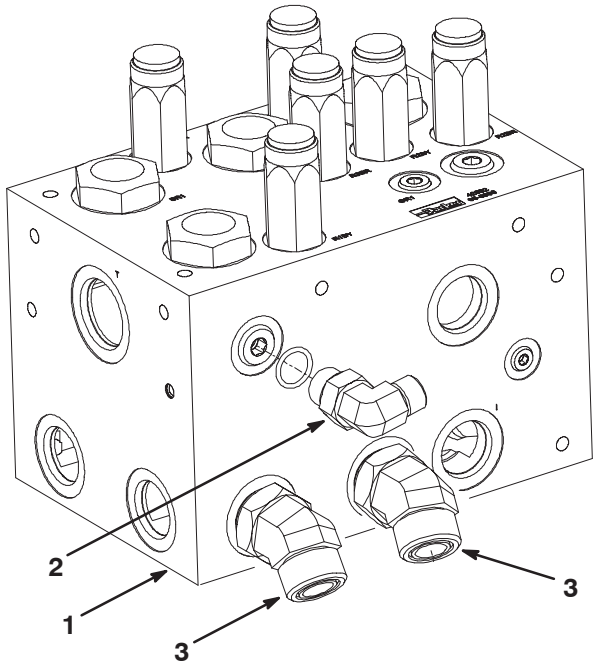

Figure 6

1. PTO manifold
2. 90 degree fitting w/o–ring
3. 45 degree fitting (2)

Note: The 45 degree fittings may need a slight adjustment when the hydraulic hoses are eventually installed.

6. Assemble the needle valve, 90 degree swivel fitting, straight fitting and O–rings (Fig. 7).

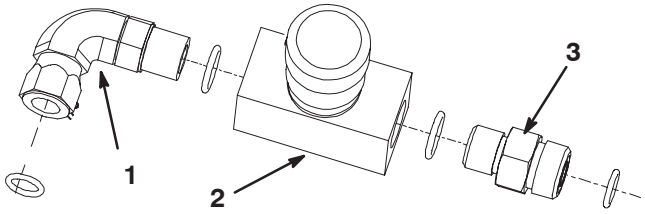

Figure 7

1. 90 degree swivel fitting w/o–ring
2. Needle valve
3. Straight fitting

Connect the Hydraulic Hoses

1. Assemble the swivel fitting to the 90 degree fitting, installed in the PTO manifold (Fig. 7 & 8).

Note: After the hydraulic hoses are installed, it may be necessary to slightly adjust each fitting.

2. Connect hose “A” and the O–rings to the needle valve straight fitting and to the 90 degree fitting on top of the flow combining valve, as shown in figure 8.

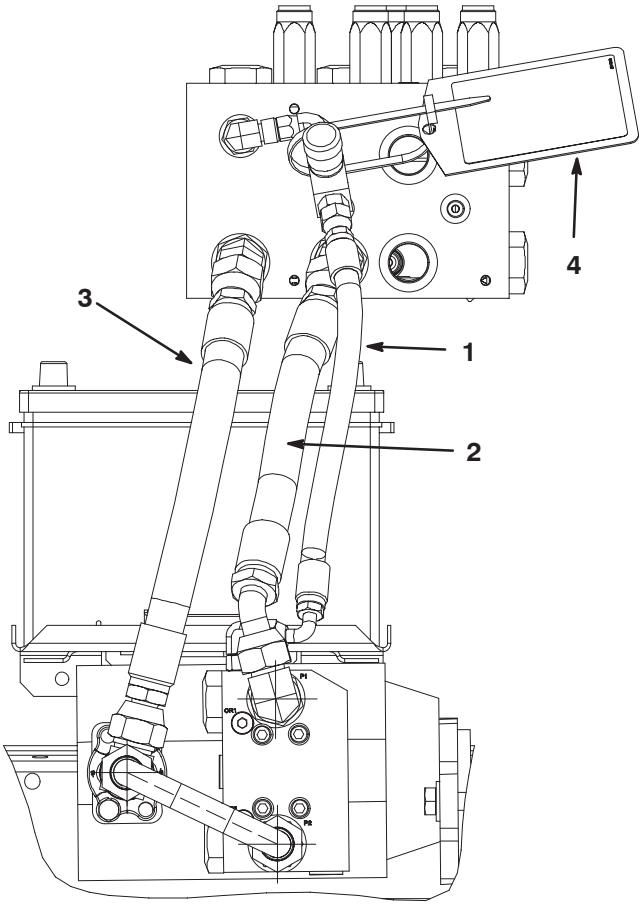

Figure 8

1. Hose “A”
1. Hose “B”
1. Hose “C”
2. Metal tag

3. Connect hose “B” and the O–rings to the 90 degree fitting on the flow combining valve and the 45 degree fitting on the PTO manifold, as shown in figure 8.

4. Connect hose “C” and O–rings to the 45 degree fitting on the PTO manifold to and to the T–fitting at the rear of the pump, as shown in figure 8.

Install the Metal Tag and the Decals

1. Affix the warning decal to one side of the metal tag and the operating decal to the other side. Install the metal tag to the flow combining needle with a cable tire (Fig. 8).

2. Affix the warning decal to the center of the front frame below the steering tower.

Check the Hydraulic System

1. If all three cutting units are still on the machine, make sure to completely close the flow combining valve.

2. Make sure all hydraulic fittings are tight.

Danger

Keep body and hands away from pin hole leaks or nozzles that elect high pressure hydraulic fluid. Use cardboard or paper, not hands, to search for all leaks. Highly pressurized hydraulic fluid that is escaping can penetrate skin and cause serious injury. If fluid is accidentally injected into the skin, it must be surgically removed within a few hours by a doctor familiar with this type of injury, otherwise gangrene may occur.

3. Start the engine, lower the cutting units and engage the deck drive/PTO switch. All cutting units should be operating at the same speed. If the side cutting units are not operating, disengage switch immediately and assure that the needle valve is completely closed.

4. With the engine running and all other controls disengaged, check for leaks around the newly installed hydraulic parts.

5. After checking for leaks, shut the engine off.

Operating Instructions

The Flow Combining Kit, by means of an in–line needle valve between the flow combiner and the manifold, controls the flow of oil to the front and side hydraulic motors.

1. **Using a front–mounted Implement** – Attachments, such as snowthrowers and brooms that are powered by the front hydraulic motor, require maximum oil flow to operate properly. To assure maximum oil flow to the front hydraulic motor and attachment, turn the needle valve counterclockwise until it is completely open to combine flow.

2. **Using three cutting units** – Three cutting units attached to the hydraulic motors require equal oil flow and power so the blades operate at the same speed. To separate flow and assure equal oil flow to all three hydraulic motors, turn needle valve clockwise until it is completely closed.

Caution

If the flow combining needle valve is accidentally allowed to remain open:

- **the front cutting unit blades will spin excessively fast and be very noisy**
- **the side cutting units will not engage.**

Failure to close the needle valve may result in serious injury to the operator of the machine, and/or bystanders, especially from thrown objects. Whenever you notice the blades spinning excessively fast, disengage the deck drive/PTO switch immediately. Then have a qualified mechanic close the needle valve before you resume operating the cutting units.

3. **Adjusting the Implement Drop Rate (Flow Control Valve)** – Rotate the flow control knob 1/4 turn (at a time) counterclockwise, if front implement is dropping too slow or 1/4 turn clockwise it front implement is dropping too fast.

Note: Allow hydraulic oil to reach full operating temperature before adjusting flow control valve.

Important **DO NOT CLOSE VALVE COMPLETELY!** Doing so will restrict fluid flow and prevent front implement from being lowered.