FORM NO. 95-9308 Rev B

TORO®

Model No. 41119-90001 & UP
Model No. 41020-90001 & UP
Model No. 41021-90001 & UP
Model No. 41128-90001 & UP
Model No. 41120-90001 & UP

OPERATOR'S INSTRUCTIONS

MANUAL VALVE SPRAY SYSTEM
for the MULTI-PRO™ 1100 Vehicle

To assure maximum safety, optimum performance, and to gain knowledge of the product, it is essential that you or any other operator of this Vehicle read and understand the contents of this manual before the engine is ever started. Pay particular attention to the SAFETY INSTRUCTIONS highlighted by the triangular safety alert symbol.

The safety alert symbol means CAUTION, WARNING or DANGER - personal safety instruction. Failure to comply with the instruction may result in personal injury.

SAFETY INSTRUCTIONS

Keep this Operator's Manual in the plastic tube behind the operator seat.

It is very important that all persons operating this equipment have easy access to these instructions at all times!

Carefully read and follow the "Set-Up" Instructions that are provided with this equipment and the Safety Instructions in the Multi-Pro™ Operator's Manual.

RECOGNIZE SAFETY INFORMATION

This safety-alert symbol is used to call attention to a **dangerous** situation, which could result in serious injury or death to the operator or a bystander.

Safety, mechanical and some general information in this manual are emphasized. **DANGER, WARNING** and **CAUTION** identify safety messages. Whenever the triangular safety symbol appears, it is followed by a safety message that must be read and understood. For more details concerning safety, read the Safety Instructions on this page and page 2. **IMPORTANT** identifies special mechanical information and **NOTE** identifies general information worthy of special attention.

These instructions are provided as a guide for the safe operation and maintenance of this equipment. However, the operator's personal safety, as well as those persons in the work area, will depend on the careful actions and good judgement of the operator. **To reduce the potential for injury or death, comply with the following safety instructions.**

BEFORE OPERATING:

1. Operate this machine only after reading and understanding the contents of this manual. A replacement manual is available by sending complete model and serial number to: Hahn, Inc., 1625 N. Garvin, Evansville, IN 47711.

2. Learn how to operate the Sprayer and how to use the controls properly. DO NOT let anyone operate this equipment without first receiving thorough instructions.

3. Keep all shields, safety devices and decals in place. If a shield, safety device or decal is malfunctioning, illegible or damaged, repair or replace it before operating the machine.

4. Chemicals can injure persons, animals, plants, soils or other property. To eliminate environmental damage and personal injury:

A. Select the proper chemical for the job.

B. Follow manufacturer's instructions on chemical container labels. Apply and handle chemicals as recommended.

C. Handle and apply chemicals with care. Wear goggles and other necessary protective equipment. Handle chemicals in well ventilated areas. Never smoke while handling chemicals.

D. Properly dispose of chemical container and unused chemicals.

©The TORO Company - 1999
All Rights Reserved

SAFETY INSTRUCTIONS

MAINTENANCE:

5. Before servicing or making any adjustments to the Sprayer:

A. Stop the Vehicle and set the parking brake.

B. Shut off the vehicle's engine and remove key from ignition.

C. Disengage all power and wait until all moving parts have stopped.

6. Keep all nuts, bolts and other fasteners tightened securely. Replace any shields removed during servicing or adjustments.

7. To be sure of optimum performance and safety, always purchase genuine TORO replacement parts and accessories. Replacement parts and accessories made by other manufacturers could be dangerous. Altering this equipment in any manner may affect the machine's operation, performance, durability or its use may result in injury or death. Such use could void the product warranty of the TORO Company.



Part No. 93-1021: Located on face of Tachometer.

RPM/SPEED RATIO

RPM	1st GEAR	2nd GEAR	3rd GEAR
2600	3.0 (MPH)	4.8 (MPH)	7.9 (MPH)
2800	3.3	5.2	8.5
3000	3.5	5.6	9.1
3200	3.7	5.9	9.7
3400	3.9	6.3	10.3

92-0920

Part No. 93-0920 Located above Tachometer



Part No. 93-0932: Located on Control Valve/ Mounting Bracket Assembly



Part No. 87-0570: Located on Rear Tank Band.



Part No. 93-1093: Located on Splash Shield.



Part No. 93-0688: Located on Lid of Sprayer Tank.



Part No. 93-0800: Located on side of Clean Water Wash Tank Saddle.

CONTROLS

PUMP ENGAGEMENT LEVER: Pivot the Pump Engagement Lever DOWN to lower the Centrifugal Pump and ENGAGE the Drive Belt. Pull UP to DISENGAGE the drive belt. See FIG 1.

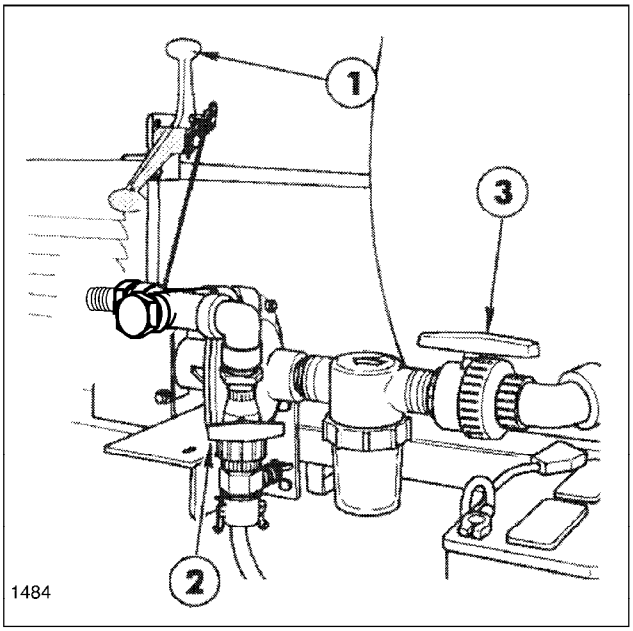

FIG. 1

1. Pump Engagement Lever
2. Agitator Valve Handle
3. Suction Valve Handle

AGITATOR VALVE HANDLE: Opens and closes the Agitator Valve to activate, adjust or stop the agitation of the spray solution in the Tank.

SUCTION VALVE HANDLE: Opens and closes the Suction Line Valve. Close during maintenance to the Suction Line Strainer or Centrifugal Pump.

IMPORTANT! The Pump will be damaged if it is activated with the Suction Line Valve closed, or before the Tank contains enough liquid to flood the Pump.

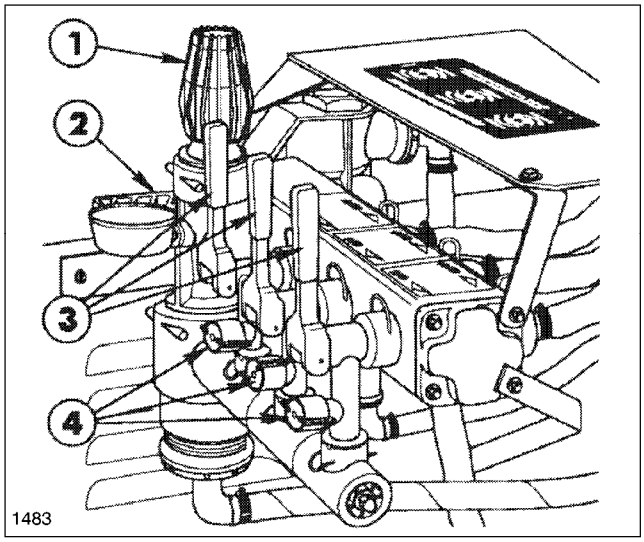

FIG. 2

1. Throttling Valve

MAIN PRESSURE ADJUST KNOB: Controls. overall pressure of Boom Spray. Turn the Knob clockwise to increase the pressure; counter-clock-wise to decrease the pressure.

MAIN SHUTOFF LEVER: Pivot the Main Shutoff Lever DOWN to begin flow to all Boom valves.

INDIVIDUAL BOOM SHUTOFF LEVER: Pivot Boom Shutoff Lever **DOWN** to begin flow to individual Boom.

INDIVIDUAL By-PASS PRESSURE ADJUST KNOBS: Turn Knobs to adjust pressure to individual Booms. Refer to the BEFORE SPRAYING section on page 6 for further instructions on this procedure.

BEFORE SPRAYING

NOZZLE SELECTION:

See the nozzle charts on page 5 to be sure that your spray nozzles have the capacity necessary to achieve the application rate selected.

To select the proper nozzle, you need to know:

1. Recommended chemical application rate in gallons per acre, gallons per 1000 sq. ft. or liters per hectare.

2. Average Vehicle speed in Miles per hour or kilometers per hour.

3. Nozzle spacing (20 inches or 50 centimeters.)

With this information you can calculate the volume per minute per nozzle, using the formulas below.

US FORMULA:

$$\text{G.P.M. (Per Nozzle)} = \frac{\text{G.P.A. x M.P.H. X 20 ins.}}{5940}$$

TU (Turf) FORMULA:

$$\text{G.P.M. (Per Nozzle)} = \frac{\text{G.P.K. x M.P.H. x 20 ins.}}{137}$$

SI (METRIC) FORMULA:

$$\text{lit/min (Per Nozzle)} = \frac{\text{lit/ha x km/h x 50 cm}}{60{,}000}$$

Use G.P.M. (lit/min) and Pressure to select appropriate nozzle from chart on page 5.

EXAMPLE (US FORMULA)

Application Rate = 75 Gallons/Acre
Vehicle Speed = 4 M.P.H.
Nozzle Spacing = 20 inches

$$\frac{\text{75 G.P.A. x 4 M.P.H. x 20}}{5940} = \text{1.00 G.P.M. (per nozzle)}$$

With 1.00 G.P.M. and a pressure of 40 P.S.I. you would select Nozzle No. 95-9188.

EXAMPLE (TU FORMULA):

Application Rate = 1.70 Gal./1000 sq. ft.
Vehicle Speed = 4 M.P.H.
Nozzle Spacing = 20 inches

$$\frac{\text{1.70 G.P.K. x 4 M.P.H. x 20}}{137} = \text{1.00 G.P.M. (per nozzle)}$$

EXAMPLE (SI FORMULA):

Application Rate = 907 lit/hectare
Vehicle Speed = 5 km/h
Nozzle Spacing = 50 cm

$$\frac{\text{907 lit/ha x 5 km/h x 50}}{60{,}000} = \text{3.78 lit/min. (per nozzle)}$$

With 3.78 lit/min. and a pressure at 275 kPa you would select nozzle No. 95-9188

SYMBOL DEFINITIONS:

GPM	- Gallons per minute
lit/min	- Liters per minute
dl/min	- Deciliter per minute
PSI	- Pounds per square inch
kPa	- Kilopascal
GPA	- Gallons per acre
lit/ha	- Liter per hectare
ml/ha	- Milliliter per hectare
GPK	- Gallons per 1,000 sq. ft.
mm	- Millimeters
cm	- Centimeters
dm	- Decimeters
m	- Meter
MPH	- Miles per hour
km	- Kilometers
km/h	- Kilometers per hour
US	- Volume per ACRE
SI	- Volume per HECTARE
TU	- Volume per 1,000 sq. ft.

LIQUID CONVERSIONS

U.S. Gallons x 128 = Fluid Ounces
U.S. Gallons x 3.785 = Liters
U.S. Gallons x 0.83267 = Imperial Gallons
U.S. Gallons x 8.34 = Pounds (Water)

LENGTH

1 millimeter (mm) = 0.039 inch
1 centimeter (cm) = 0.393 inch
1 meter (m) = 3.281 feet
1 kilometer (km) = 0.621 mile
1 inch = 25.4 millimeters; 2.54 centimeters
1 mile = 1.609 kilometers

PRESSURE

1 psi = 6.89 kPa

AREA

1 square meter = 10.764 sq. feet
1 hectare (ha) = 2.471 acres; 10,000 sq.meters
1 acre = 0.405 hectare; 43,560 sq. ft.
1 sq. mile = 640 acres; 258.9 hectares

Gallons Per Acre Application Rates

TORO Part No.	Nozzle Number / Color Code	Pressure (PSIG)	Capacity 1 Nozzle (GPM)	Gallons per Acre at 20" Spacings							
				2.5 MPH	3 MPH	3.5 MPH	4 MPH	4.5 MPH	5 MPH	5.5 MPH	6 MPH
95-9221	Yellow	20	0.14	16.6	13.9	11.9	10.4	9.2	8.3	7.6	6.9
		30	0.17	20.2	16.8	14.4	12.6	11.2	10.1	9.2	8.4
		40	0.20	23.8	19.8	17.0	14.9	13.2	11.9	10.8	9.9
		50	0.22	26.1	21.8	18.7	16.3	14.5	13.1	11.9	10.9
95-9222	Red	20	0.28	33	28	24	21	18	17	15	14
		30	0.35	42	35	30	26	23	21	19	17
		40	0.40	48	40	34	30	26	24	22	20
		50	0.45	53	45	38	33	30	27	24	22
95-9223	Brown	20	0.35	42	35	30	26	23	21	19	17
		30	0.43	51	43	36	32	28	26	23	21
		40	0.50	59	50	42	37	33	30	27	25
		50	0.56	67	55	48	42	37	33	30	28
95-9224	Gray	20	0.42	50	42	36	31	28	25	23	21
		30	0.52	62	51	44	39	34	31	28	26
		40	0.60	71	59	51	45	40	36	32	30
		50	0.67	80	66	57	50	44	40	36	33
95-9225	White	20	0.57	68	56	48	42	38	34	31	28
		30	0.69	82	68	59	51	46	41	37	34
		40	0.80	95	79	68	59	53	48	43	40
		50	0.89	106	88	76	66	59	53	48	44
95-9188	Light Blue	20	0.71	84	70	60	53	47	42	38	35
		30	0.87	103	86	74	65	57	52	47	43
		40	1.00	119	99	85	74	66	59	54	50
		50	1.12	133	111	95	83	74	67	60	55
95-9226	Light Green	20	1.06	126	105	90	79	70	63	57	52
		30	1.30	154	129	110	97	86	77	70	64
		40	1.50	178	149	127	111	99	89	81	74
		50	1.68	200	166	143	125	111	100	91	83

Gallons Per 1000 Sq. Ft. Application Rates

TORO Part No.	Nozzle Number / Color Code	Pressure (PSIG)	Capacity 1 Nozzle (GPM)	Gallons per 1000 Sq. Ft. at 20" Spacings							
				2.5 MPH	3 MPH	3.5 MPH	4 MPH	4.5 MPH	5 MPH	5.5 MPH	6 MPH
95-9221	Yellow	20	0.14	0.38	0.32	0.27	0.24	0.21	0.19	0.17	0.16
		30	0.17	0.46	0.39	0.33	0.29	0.26	0.23	0.21	0.19
		40	0.20	0.54	0.45	0.39	0.34	0.30	0.27	0.25	0.23
		50	0.22	0.60	0.50	0.43	0.37	0.33	0.30	0.27	0.25
95-9222	Red	20	0.28	0.76	0.63	0.54	0.48	0.42	0.38	0.35	0.32
		30	0.35	0.95	0.79	0.68	0.60	0.53	0.48	0.43	0.40
		40	0.40	1.09	0.91	0.78	0.68	0.60	0.54	0.49	0.45
		50	0.45	1.22	1.02	0.87	0.77	0.68	0.61	0.56	0.51
95-9223	Brown	20	0.35	0.95	0.79	0.68	0.60	0.53	0.48	0.43	0.40
		30	0.43	1.17	0.97	0.84	0.73	0.65	0.58	0.53	0.49
		40	0.50	1.36	1.13	0.97	0.85	0.76	0.68	0.62	0.57
		50	0.56	1.52	1.27	1.09	0.95	0.85	0.76	0.69	0.63
95-9224	Gray	20	0.42	1.14	0.95	0.82	0.71	0.63	0.57	0.52	0.48
		30	0.52	1.41	1.18	1.01	0.88	0.79	0.71	0.64	0.59
		40	0.60	1.63	1.36	1.17	1.02	0.91	0.82	0.74	0.68
		50	0.67	1.82	1.52	1.30	1.14	1.01	0.91	0.83	0.76
95-9225	White	20	0.57	1.55	1.29	1.11	0.97	0.86	0.78	0.70	0.65
		30	0.69	1.88	1.56	1.34	1.17	1.04	0.94	0.85	0.78
		40	0.80	2.18	1.81	1.55	1.36	1.21	1.09	0.99	0.91
		50	0.89	2.42	2.02	1.73	1.51	1.34	1.21	1.10	1.01
95-9188	Light Blue	20	0.71	1.93	1.61	1.38	1.21	1.07	0.97	0.88	0.80
		30	0.87	2.37	1.97	1.69	1.48	1.31	1.18	1.08	0.99
		40	1.00	2.72	2.27	1.94	1.70	1.51	1.36	1.24	1.13
		50	1.12	3.05	2.54	2.18	1.90	1.69	1.52	1.38	1.27
95-9226	Light Green	20	1.06	2.88	2.40	2.06	1.80	1.60	1.44	1.31	1.20
		30	1.30	3.54	2.95	2.53	2.21	1.96	1.77	1.61	1.47
		40	1.50	4.08	3.40	2.91	2.55	2.27	2.04	1.85	1.70
		50	1.68	4.57	3.81	3.26	2.86	2.54	2.28	2.08	1.90

Liters Per Hectare Application Rates

TORO Part No.	Nozzle Number Color Code	Pressure (kPa)	Capacity 1 Nozzle (L/min)	Liters per Hectare at 50 cm Spacings							
				4 km/h	5 km/h	6 km/h	7 km/h	8 km/h	9 km/h	10 km/h	11 km/h
95-9221	Yellow	150	0.53	159	127	106	91	80	71	64	58
		200	0.64	192	154	128	110	96	85	77	70
		275	0.76	228	182	152	130	114	101	91	83
		350	0.83	249	199	166	142	125	111	100	91
95-9222	Red	150	1.06	318	254	212	182	159	141	127	116
		200	1.32	396	317	264	226	198	176	158	144
		275	1.51	453	362	302	259	227	201	181	165
		350	1.70	510	408	340	291	255	227	204	185
95-9223	Brown	150	1.40	420	336	280	240	210	187	168	153
		200	1.61	483	386	322	276	242	215	193	176
		275	1.89	567	454	378	324	284	252	227	206
		350	2.13	639	511	426	365	320	284	256	232
95-9224	Grey	150	1.67	501	401	334	286	251	223	200	182
		200	1.93	579	463	386	331	290	257	232	211
		275	2.27	681	545	454	389	341	303	272	248
		350	2.56	768	614	512	439	384	341	307	279
95-9225	White	150	2.23	669	535	446	382	335	297	268	243
		200	2.58	774	619	516	442	387	344	310	281
		275	3.02	906	725	604	518	453	403	362	329
		350	3.41	1023	818	682	585	512	455	409	372
95-9188	Light Blue	150	2.79	837	670	558	478	419	372	335	304
		200	3.22	966	773	644	552	483	429	386	351
		275	3.78	1134	907	756	648	567	504	454	412
		350	4.28	1284	1027	856	734	642	571	514	467
95-9226	Light Green	150	4.18	1254	1003	836	717	627	557	502	456
		200	4.84	1452	1162	968	830	726	645	581	528
		275	5.67	1701	1361	1134	972	851	756	680	619
		350	6.40	1920	1536	1280	1097	960	853	768	698

BEFORE SPRAYING

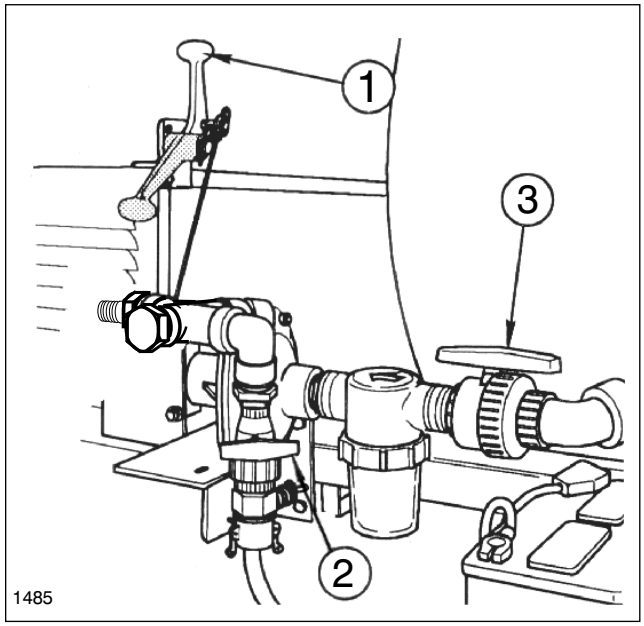

FIG. 3

1. Pump Engagement Lever (Disengaged)
2. Suction valve Handle (Open)
3. Pump Engagement Lever (Engaged)

SYSTEM SET-UP:

1. Fill the Tank with water and open the Suction Line Valve. See FIG. 3.

IMPORTANT: The pump will be damaged if it is activated before it is completely filled with liquid. Be certain the suction line valve is open and liquid has reached the pump.

2. Take the Vehicle out of gear and set the parking brake. Move the Pump Engagement Lever **UP** to the **disengaged** position. Start the engine and set the throttle at 3/4 to full RPM to represent your desired spraying speed.

3. Move the Pump Engagement Lever **DOWN** to the engaged position.

4. Turn all three individual Boom Shut-off Levers and Main Shut-Off Lever to the "ON" position.

5. Set the Pressure Gauge to the desired operating pressure, using Main Pressure Adjust Knob.

6. With all three Boom Shut-Off Levers “ON”, switch Boom to “OFF”. You will notice a change in pressure at the Gauge. Turn the left By-Pass

BEFORE SPRAYING

Pressure Adjust Knob until the original pressure setting is reached. Turn Left Boom back on.

7. With all Boom "ON", switch Center Boom to "OFF" and adjust the Center Boom's By-Pass Pressure Adjust Knob. Turn Center Boom back on.

8. With all Booms on, Switch Right Boom to "OFF" and repeat this procedure for setting the Right Boom's By-Pass Pressure Adjust Knob. Turn Right Boom back on.

To double check these settings, switch Boom sections ON and OFF. Verify that the pressure does not change at the gauge.

NOTE: This entire procedure should be repeated whenever changeing to a different operating pressure.

FILLING THE SOLUTION TANK:

CAUTION

CHEMICALS ARE HAZARDOUS AND CAN CAUSE PERSONAL INJURY!

- **Carefully read the directions printed on the chemical manufacturer's labels before handling chemicals. Instructions on chemical manufacturer's container labels, regarding mixing proportions, should be strictly followed.**
- **Keep spray material from skin. If spray material comes in contact with body, wash it off immediately with clean water and detergent.**
- **Always wear goggles and other protective equipment as recommended by the Chemical Manufacturer.**

IMPORTANT: Do not add chemical to Tank until just before use. The concentrate should not be poured into an empty Tank: fill Tank about one-half full with clean, clear water, add chemical concentrate and finish filling Tank with water. Follow the chemical manufacturer's instructions for mixing spray solution to obtain desired application rate.

FILL THE FRESH WATER WASHTANK

NOTE: Fill Fresh Water Wash Tank with clean water only. Check to assure tank is full before each operation.

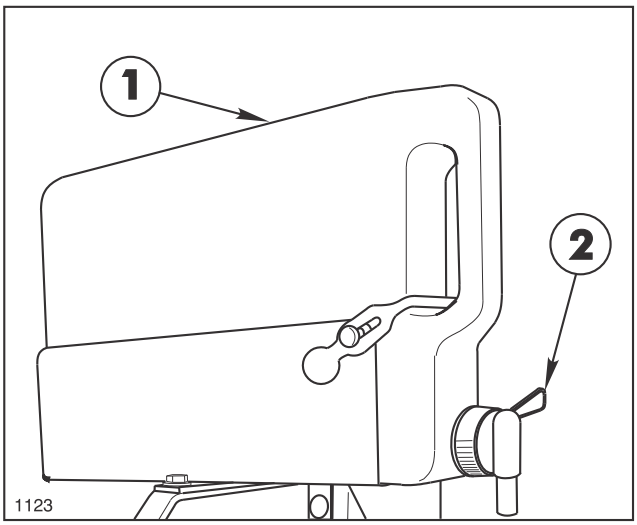

FIG. 4.

1.Clean Water Wash Tank 2. Tank Spigot

In case of chemical contact with skin or eyes, a fresh water wash tank has been installed on the R.H. side of the vehicle.

1. Turn Tank Spigot to on position. See FIG. 4.

2. Hold contaminated area directly under water stream.

OPERATION

USING THE SPRAYER:

IMPORTANT: Check all of your equipment... Make sure that all components are clean, including the Tank, Pump, Control Valve, Solenoids, Strainers, Check Valves, Hoses, Nozzles, Spray Tips, and Suction Line Strainer.

1. Start the vehicle engine and select the proper gear. Position the throttle to the desired operating RPM, as determined by RPM/Seed ratio decal located on the front dash panel above the Tachometer.

2. Engage the Pump and use the Main Shut off Lever and individual Boom Shut off Levers to control Boom sections while spraying.

IMPORTANT! While operating the Sprayer:

- Do not overlap areas that have been sprayed previously.

OPERATION

• Watch for plugged Nozzles. Replace all worn Nozzles or those producing streaky or uneven patterns.

• Stop the spray flow **before** stopping the vehicle.

AFTER SPRAYING:

It is extremely important to carefully wash and clean the Tank after **every** use. Not only the Tank but the Pump, Hoses, Nozzles, Screens, Filters, and the exterior of the Sprayer also should be cleaned.

Flush Pump After Use

One for the most common causes for faulty pump performance is “gumming” or corrosion inside the pump. Flush the pump and entire system with a solution that will chemically neutralize the liquid pumped. Mix according to the manufacturer’s directions. This will dissolve most residue remaining in the pump, leaving the inside of the pump clean for the next use.

A **minimum** of three (3) rinses usually is required for all components of the Sprayer. The addition of a detergent cleaner may be advisable in the initial washing. Directions for such an addition, if required, are included on the chemical container.

Cleaning of Sprayer should be accomplished in an area where there is no potential for the chemicals to be washed off in surface water or to enter subsurface drainage systems.

When Sprayer is not to be used for an extended period, refer to the **STORAGE** section of this Manual for the detailed instructions to prevent damage to the components.

PREVENTIVE MAINTENANCE

Preventative maintenance is most important to assure long life of the Manual Spray System. The following maintenance procedures should be followed on a regular basis:

Flush the entire spraying system after each use as described above. Failure to clean the system can result in a chemical residue which can plug the Control Valve, Hoses and/or Nozzle Tips, and seriously damage the Centrifugal Pump.

Wash spray nozzles thoroughly with water. Blow out orifice, clean and dry. If orifice remains clogged, clean it with a soft bristled brush... never use a metal object.

Check all of the nozzles frequently to spot any inconsistencies in the spray pattern. Worn nozzle orifices which allow a greater volume of spray material to flow through the nozzle can cause an expensive loss in chemical and/or turf damage.

SUCTION STRAINER:

Turn off Suction Line Valve if Tank is full of spray solution. Remove the bowl and clean the strainer screen when spraying wettable powders - after every 50 hours when using liquid chemical.

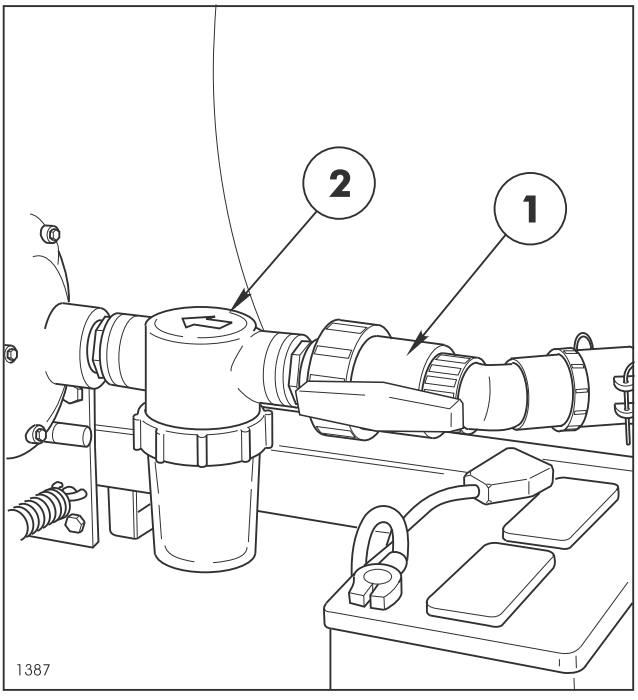

FIG. 5
1. Suction Line Valve (open) 2. Suction Strainer

IMPORTANT: Do not operate the pump dry! Be certain Suction Line Valve is opened when spraying is resumed. Damage to Spray Pump will result when operating the Sprayer with Valve closed.

PREVENTIVE MAINTENANCE

BELT TENSION:

⚠ CAUTION

ROTATING PULLEYS AND BELTS CAN CAUSE SERIOUS INJURY.

- **Keep hands, feet, and clothing clear while engine is running.**
- **Stop engine before attempting any belt adjustment.**

The best tension for a V belt drive is the lowest tension at which the Belt will not slip under the highest load condition. Too much tension shortens Belt and Bearing life.

Keep Belt and Pulley free from any foreign material which may cause slippage. If a V belt slips, tighten it.

Check the tension on a new drive belt **frequently** during the **first day** of operation and periodically thereafter.

Check and maintain the clearances between all Belt Guides and the outside surfaces of the Belts at 1/8 inch.

After every 200 hours of operation, check the tension of all belts and clearances of Belt Guides. If a Belt shows signs of cracks or fraying, install a new belt.

MAINTENANCE

CENTRIFUGAL PUMP SEAL PROBLEM TROUBLESHOOTING

Trouble	Probable Cause	Remedy
1. Cracked or broken stationary seat(ceramic)	Seal ran dry and heated up. When liquid reached seal faces it was cooler, causing thermal cracks.	Check to insure seal chamber is full of liquid before starting pump. On high temperature application, insure proper flushing at seal surfaces
2. Carbon washer scored grooved.	Dirty System.	Have system cleaned and flushed.
3. Carbon washer worn unevenly.	Seal improperly installed.	Check installation instructions for proper assembly.
4. Rubber bellows of seal are hard and brittle. Rapid carbon wear.	Pump ran dry or cavitated.	Check to insure seal chamber is full of liquid before starting pump.
5. Retainer drive tabs badly worn or broken.	Periodic loss of lubrication at seal faces.	Insure proper flushing at seal faces.
6. Flexible bellows broken.	Seal improperly installed.	Check installation instructions for proper assembly.
7. Seal wears out shaft.	Check bearings for shaft end play. Check bearings for shaft radial movement. Check Shaft straightness.	Replace bearings. Replace Shaft.

MAINTENANCE

Always flush pump with water, or neutralizing agent before servicing.

Refer to the illustrated Parts List for part ordering information.

Pump Housing Disassembly
In most cases, seal replacement requires disassembly of only the pump half of the unit.

1. Remove the four casing cap screws with a 9/16" box end wrench. Tap pump casing on discharge port with rubber hammer, if necessary, to break loose from the mounting flange. Check inside of pump casing including suction port. If badly eroded (or damaged), pump casing should be replaced.

2. To remove the impeller nut, clamp the flange in a vise and insert a large screwdriver or file (at least 10" long) into impeller vanes to prevent impeller from turning when loosening nut. Use a 5/8" box end or socket wrench to remove the impeller nut by turning it counterclockwise. See FIG 6.

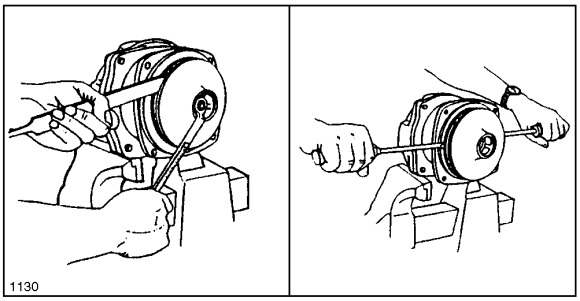

FIG. 6

3. Once nut is removed, place a screwdriver on each side (FIG 6)behind the impeller and pry away from the mounting flange. Remove woodruff key from the shaft. Remove O-ring from the mounting flange. Remove O-ring and discard. O-ring should always be replaced.

Pump Seal Removal

1. Lightly lubricate shaft for easier removal of seal. Using two screwdrivers positioned opposite each other, pry the rotary portion of the seal from the shaft. See FIG. 7.

2. Remove stationary seat and boot by prying out with two small screwdrivers in manner similar to impeller removal. (Important: The seal will be damaged by removal in this manner. A new seal and rubber gasket MUST be used when pump is reassembled.)

Clean-Up of Pump Housing

1. Using a circular bottle-type wire brush with air or hand drill, clean the discharge port, suction port, and the sealing areas of the O-ring on the pump casing and mounting flange.

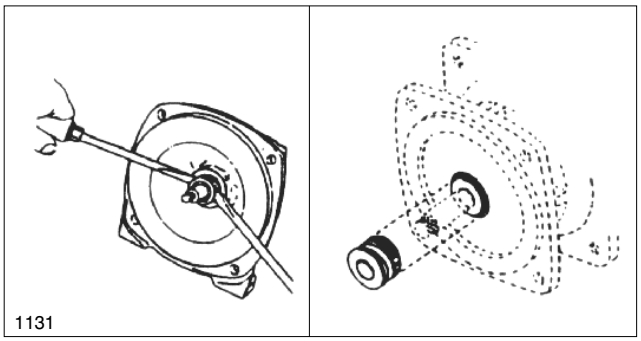

FIG. 7.

2. After wire brush cleaning, it is recommended that the pump casing and mounting flange be further cleaned in a solvent tank to remove rust and corrosion particles.

Seal Replacement/Pump Housing Reassembly

Be extremely careful with the new seal. Take special care not to scratch the lapped sealing faces of the rotary washer and stationary seat.

1. Lubricate seal cavity in mounting flange with WD-40, LPS, or equivalent.

2. Install the stationary portion of the mechanical seal by sliding over the shaft with the ceramic side out.

IMPORTANT: Make sure both seal cavity and seal are clean and lubricated. Never run the sealing faces dry.

3. To seat the seal in the seal cavity, use a piece of 3/4" PVC pipe 4" to 6" in length. Press it in firmly and squarely. Lubricate sealing surface on seal after it is sealed.

4. To install the rotary portion of the mechanical seal, place it over the shaft with the carbon side facing in, and press until it bottoms out against the stationary portion. See FIG. 7.

5. Insert key into shaft key slot. Place impeller on shaft. Put impeller nut on shaft end using a large screwdriver or file in the impeller vanes for support, tighten impeller nut securely.

6. Install new O-ring on mounting flange. O-ring should always be replaced.

7. Place pump casing on mounting flange, insert and tighten bolts evenly.

STORAGE

FLUSH PUMP AFTER USE

One of the most common causes for faulty pump performance is "gumming" or corrosion inside the pump. Flush the pump and entire system with a solution that will chemically neutralize the liquid pump. Mix according to manufacturer's directions. This will dissolve most residue remaining in the pump, leaving the inside of the pump clean for the next use.

TO PREVENT CORROSION

After cleaning the pump as directed above, flush it with a permanent type automobile antifreeze (Prestone, Zerex, etc.) containing a rust inhibitor. Use a 50% solution - that is , half antifreeze and half water, or fill pump with FLUID FILM and then drain it. A protective coating of FLUID FILM will remain on the inner pump surfaces. Save the excess FLUID FILM for the next application. Plug the ports to keep out air during storage. For short periods of idleness, noncorrosive liquids may be left in the pump, BUT AIR MUST BE KEPT OUT. Plug ports or seal port connections.

IMPORTANT: FREEZING TEMPERATURES MAY DAMAGE THE PUMP & CONTROL VALVE IF THE WATER IS NOT DRAINED COMPLETELY!

SERVICING AFTER STORAGE:

Flush the entire spraying system with clean water and detergent.

Flush the entire spraying system again with clean, clear water to rinse.

Drain entire spraying system.

STORAGE AND DISPOSAL OF CHEMICALS:

Follow chemical manufacturer's recommendations for storage and disposal of chemicals.

The Toro Commercial Products Two Year Limited Warranty

The Toro Company warrants your 1996 or newer Toro Commercial Product ("Product") purchased after January 1, 1997, to be free from defects in materials or workmanship for the period of time listed below. Where a warrantable condition exists, Toro will repair the Product at no cost to you including diagnosis, labor , parts, and transportation. This warranty begins on the date the Product is delivered to the original retail purchaser.

Warranty Duration: Two years or 1500 operational hours*, whichever occurs first.
***Product equipped with hour meter**

Owner Responsibilities:

As the Product owner, you are responsible for required maintenance and adjustments stated in your Owner's Manual. Failure to preform required maintenance and adjustments can be grounds for disallowing a warranty claim.

Instructions for Obtaining Warranty Service:

You are responsible for notifying the Commercial Products Distributor or Authorized Commercial Products Dealer from whom you purchased the Product as soon as you believe a warrantable condition exists.

If you need help locating a Commercial Products Distributor or Authorized Dealer, or if you have questions regarding your warranty rights or responsibilities, you may contact us at:

TORO Commercial Products Service Department
8111 Lyndale Avenue South
Minneapolis, MN 55420-1196
Telephone: (612) 888-8801
Facsimile: (612) 887-8258
E-Mail: Commercial.Service@Toro.Com

Maintenance Parts:

Parts scheduled for replacement as required maintenance ("Maintenance Parts"), are warranted for the period of time up to the scheduled replacement time for that part.

Items/Conditions Not Covered:

Not all product failures or malfunctions that occur during the warranty period are defects in material or workmanship. The items / conditions listed below are not covered by this warranty:

- Product failures which result from the use of non-Toro replacement parts, or from installation and use of add-on, modified, or unapproved accessories are not covered.
- Product failures which result from failure to perform required maintenance and/or adjustments are not covered.
- Product failures which result from operating the Product in an abusive, negligent, or reckless manner are not covered.
- This warranty does not apply to parts subject to consumption through use unless found to be defective. Examples of parts which are consumed, or used up, during normal Product operation include, but are not limited to, blades, reels, bedknives, tines, spark plugs, castor wheels, tires, filters, belts, etc.
- This warranty does not apply to failures caused by outside influence. Items considered to be outside influence include, but are not limited to, weather, storage practices, contamination, use of unapproved coolants, lubricants, additives, or chemicals, etc.
- This warranty does not apply to normal "wear and tear" items. Normal "Wear and Tear" includes, but is not limited to, damage to seats due to wear or abrasion, worn painted surfaces, scratched decals or windows, etc.

Other Legal Disclaimers:

The above remedy of product defects through repair by an authorized distributor or dealer is the purchaser's sole remedy for any defect. This warranty gives you specific legal rights, and you may also have other rights which vary from state to state.

Except for the Emissions warranty referenced below, If applicable, there is no other express warranty. All implied warranties of merchantability and fitness for use are limited to the duration of the express warranty.

Some states do not allow limitations on how long an implied warranty lasts, so the above limitations may not apply to you.

The Toro Company is not liable for indirect, incidental or consequential damages in connection with the use of the Product, including any cost or expense of providing substitute Product or service during periods of malfunction or non-use.

Some states do not allow the exclusion of incidental or consequential damages, so the above exclusion may not apply to you.

Note to California residents: The Emissions Control System on your Product may be covered by a separate warranty meeting requirements established by the U.S. Environmental Protection Agency (EPA), or the California Air Resources Board (CARB). The hour limitations set forth above do not apply to the Emissions Control System Warranty. Refer to the California Emission Control Warranty Statement printed in your Owner's Manual or contained in the engine manufacturer's documentation for details.