Form No. 3353–784 Rev A

Four Wheel Drive Kit

Groundsmaster 580D

Model No. 30601–250000001 and Up

Installation Instructions

Note: For machine model 30582 with serial numbers 240000101 through 250000253, the revision level of the ACE software that is loaded in the machine controller must be verified to ensure it is of the latest version that is currently available from Toro. The verification of this software needs to be performed by an authorized Toro Commercial Distributor.

⚠ WARNING

POTENTIAL HAZARD
- **Traction Unit rolls over.**

WHAT CAN HAPPEN
- **Bodily injury could occur.**

HOW TO AVOID THE HAZARD
- **Make sure ROPS is installed on all Groundsmaster 580–D Traction Units equipped with a Four Wheel Drive Kit.**

Mount the Wheel Motors

1. Disconnect/remove the rear tires, tie rod assembly and steering cylinder from the wheel spindles. Remove the wheel spindles from the axle (Fig. 1).

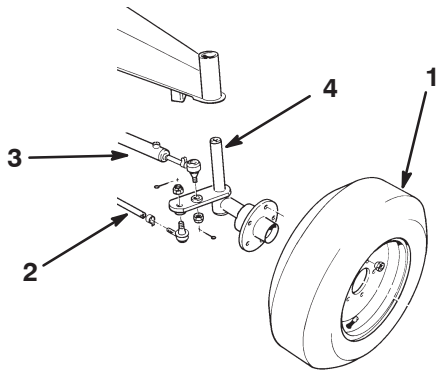

Figure 1

1. Rear tire
2. Tire rod
3. Steering cylinder
4. Wheel spindle

2. Slide a thrust washer over the shaft on each of the wheel motor housings (Fig. 2).

3. Slide the left and right wheel motor housings onto the axle and secure with retaining rings, spindle caps, and 3/8–16 x 3/4” lg. flange bolts (Fig. 2).

4. Reinstall the steering cylinders. **Do not re–use the washers when installing the steering cylinders to the wheel motor housings.** Adjust the ball joint on the steering cylinder so that the steering arms contact the stops on the axle in either direction (Fig. 2).

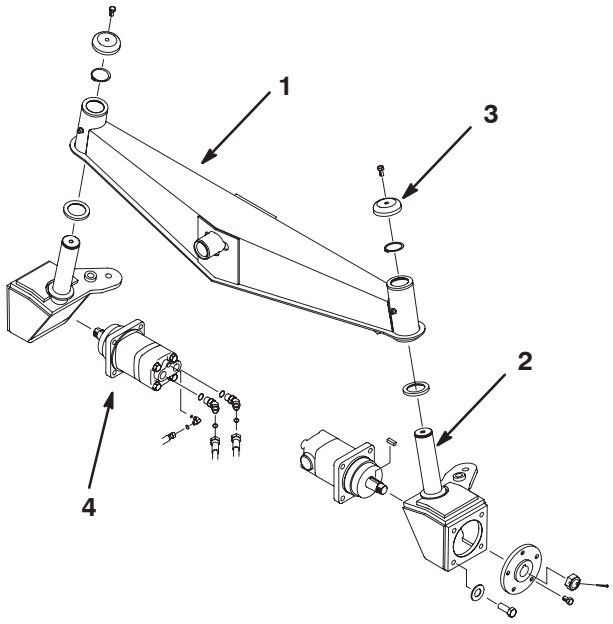

Figure 2

1. Four wheel drive axle
2. Wheel motor housing
3. Spindle caps
4. Wheel motor

5. Reinstall the tie rod and tires. **Do not re–use the washers when installing the tie rods to the wheel motors.** Torque the wheel studs to 50 ft–lbs.

6. Adjust the tie rod so that the toe–in (measure at the front of the tires) is within 1/8 of an inch when the wheels are in the straight ahead position. The measurement must be taken at the same height from the ground on both the front and rear (Fig. 3). After adjusting, the slots in the tie rod and the clamps should face downwards.

© 2005 by The Toro Company
8111 Lyndale Avenue South
Bloomington, MN 55420-1196

All Rights Reserved
Printed in the USA

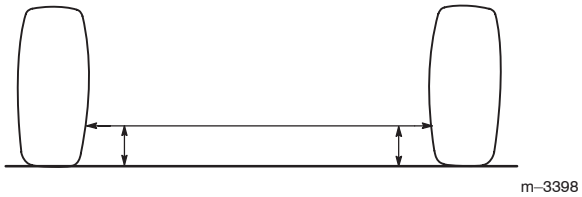

Figure 3

Install the Hydraulic Lines

1. Remove the hydraulic tubes from the rear bulkhead assembly (Fig. 4).

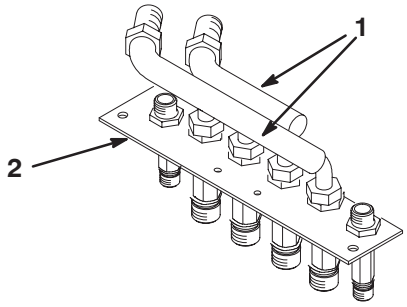

Figure 4

1. Hydraulic tubes
2. Bulkhead assembly

2. Secure the rear bulkhead assembly to the rear bumper with two 3/8–16 x 1" lg. screws and 3/8–16 locknuts (Fig. 5).

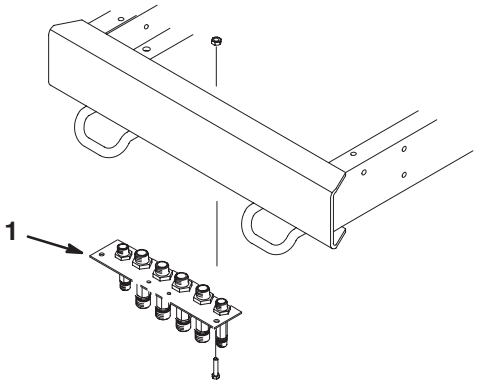

Figure 5

1. Bulkhead assembly

3. Install the hoses from the wheel motors to the rear bulkhead assembly (Fig. 6).

Note: The two hoses in the center of the rear bulkhead assembly go to the rear port holes that are closest to the rear of the unit. The outside hoses attach to the port holes that are closest to the front of the unit.

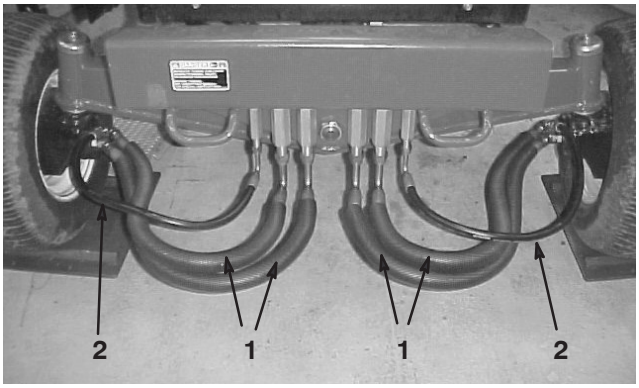

Figure 6

1. Wheel motor hoses (Part No. 100–3910)
2. Wheel motor drain hoses (Part No. 100–3912)

4. Install a Tee fitting to the rear bulkhead plate as shown in figure. 7.

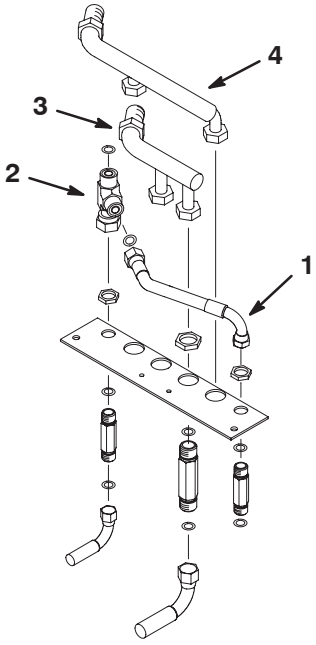

Figure 7

1. Bulkhead hose (Part No. 100–3911)
2. Tee fitting
3. Hydraulic tube (short)
4. Hydraulic tube (long)

5. Install the bulkhead hose as shown in figure. 7.

6. Reinstall the hydraulic tubes to the rear bulkhead assembly. Install the longer tube first.

7. Attach the block bracket to the frame with two 5/16–18 x 3/4" lg. self tapping screws and washers (Fig. 8).

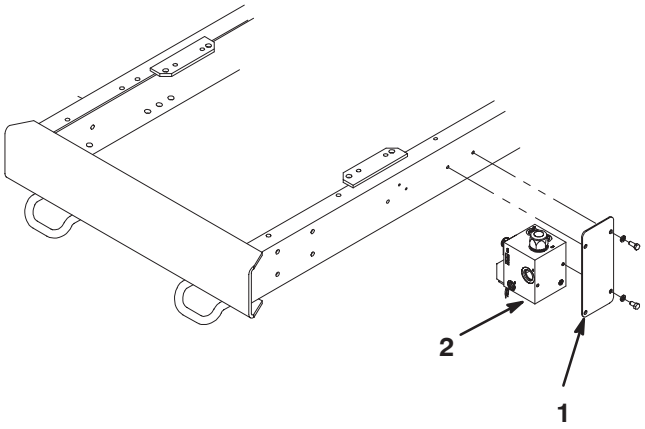

Figure 8

1. Block bracket
2. Control block

8. Remove the two bolts from the cover on the bottom of the Hydrostat. Install the switch bracket to the cover and the hydrostat with the two bolts previously removed and the two .312 x .750 washers, which are included in the kit (Fig. 9 & 10).

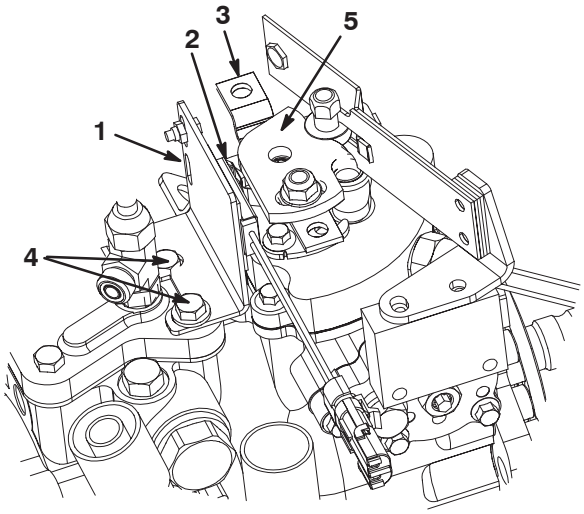

Bottom view

Figure 9

1. Switch bracket
2. Switch arm
3. Hydrostat arm
4. Cover mounting bolts
5. Cam plate

9. Mount the mechanical switch to the switch bracket with two #10–24 screws and nuts positioning it so the arm on the switch in is contact with the arm on the hydrostat (Not the cam plate) (Fig. 9 & 10). Engage the switch by sliding the switch and the switch bracket towards the arm on the hydrostat until a click is heard. Then, slide the switch and the switch bracket away from the arm on the hydrostat until it clicks again (resets).Tighten the bolts securing the switch bracket to the hydrostat.

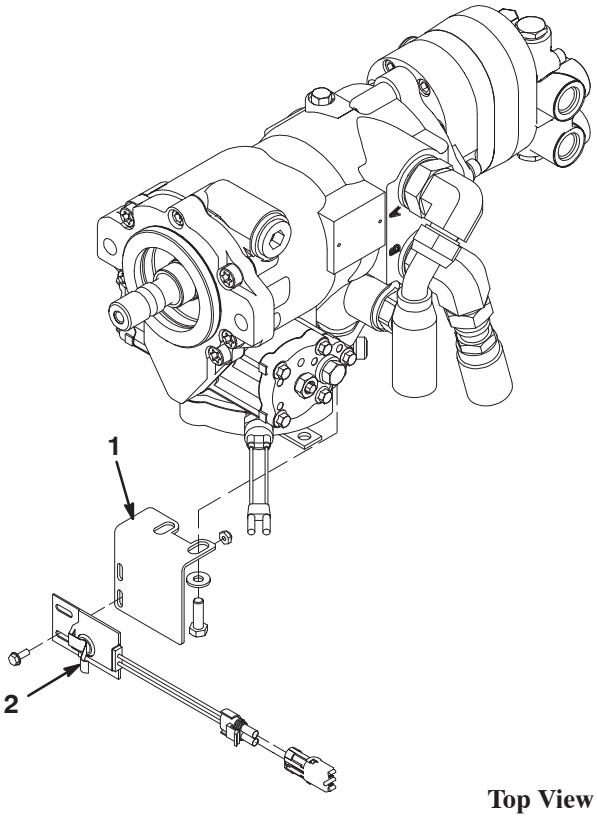

Top View

Figure 10

1. Switch bracket
2. Switch

10. To check the position and the operation of the switch, depress the traction pedal fully in reverse and measure the gap between the arm and the switch body. The gap should be a minimum of 1/8" (Fig. 11).

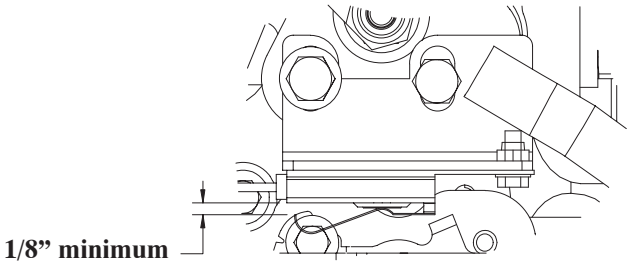

Figure 11

11. Insert the spacer into the hose clamp. Attach the hose clamp to the hose bracket with two 1/4–20 x 2–1/2” lg. screws and nuts. Remove the bolts and locknuts from the left front motor mount, near the left side of the carrier frame and discard the locknuts. Install the hose bracket and hose clamp with the previously removed bolts and two new locknuts (Fig. 12).

Note: Hose 100–3913 routes through the hose clamp (Fig. 12).

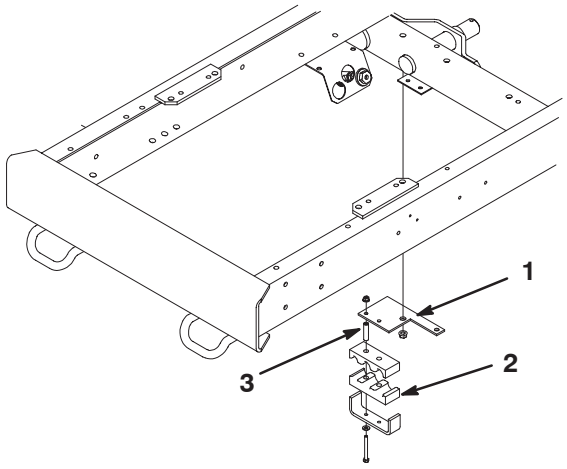

Figure 12

1. Hose bracket
2. Hose clamp
3. Spacer

12. Mount the control block to the block bracket with two 5/16–18 x 5/8” lg. screws and washers (Fig. 8).

13. Install the remaining hoses, positioning as shown in figure 13. Use figures 14 –17 for reference during installation.

Note: Route hoses 106–0197, 106–0190 & 100–3919 above the wing deck carrier frame, on top of existing long hydraulic tubes and next to main wire harness.

Note: Hoses 106–0197 & 106–0198 are connected to the control block and front bulkhead fittings. Remove caps from fittings.

Note: Hose 76–9570 connects to existing Tee fitting located at R.H. bulkhead for the right, deck motor hydraulic hoses.

Note: Hose 100–3915 connects to existing Tee fitting located at L.H. bulkhead connections for the left, deck motor hydraulic hoses

Note: Hose 100–3919 connects to existing Tee fitting located on the underside of the hydrostat.

14. Secure all new hoses with cable ties. Make sure hoses do not contact any hot or moving parts.

Note: Route hose 100–3914 under oil pan allowing a 4” gap between oil pan and hose.

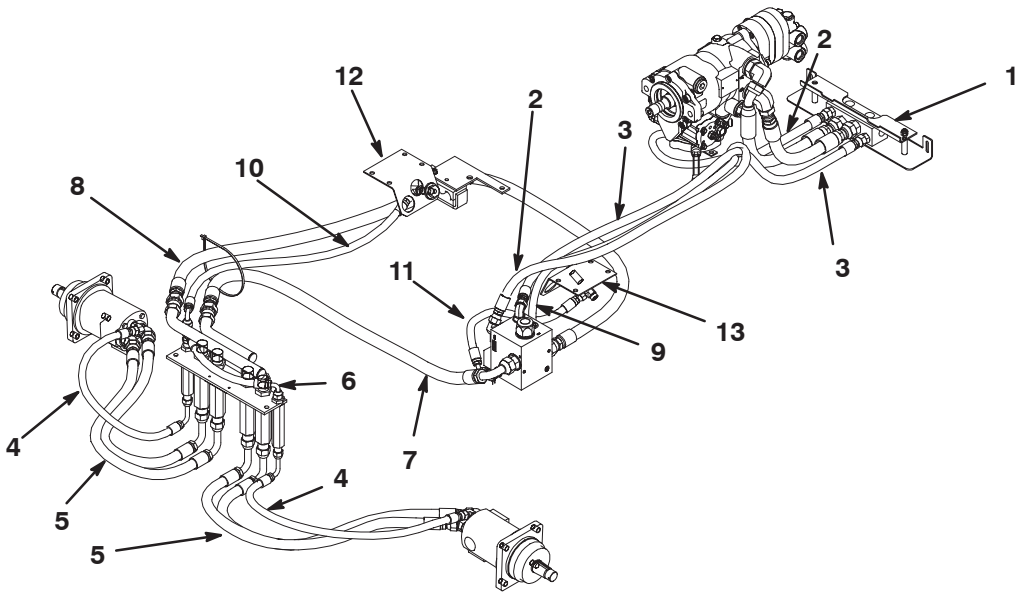

Figure 13

1. Front Bulkhead
2. Part No. 106–0197
3. Part No. 106–0198
4. Part No 100–3912
5. Part No 100–3910
6. Part No 100–3911
7. Part No 100–3914
8. Part No 100–3913
9. Part No. 100–3919
10. Part No 100–3915
11. Part No 76–9570
12. L.H. Bulkhead
13. R.H. Bulkhead

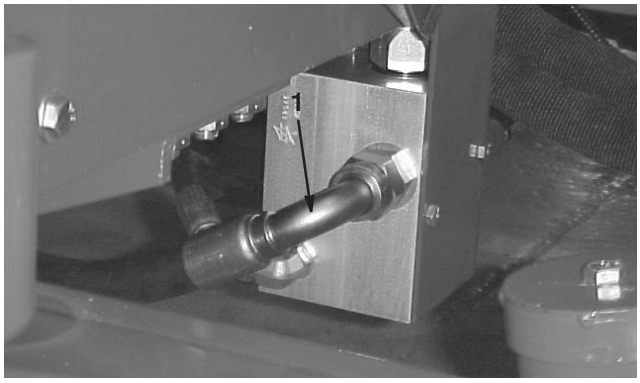

Figure 14

1. Hose (Part No. 100–3914)

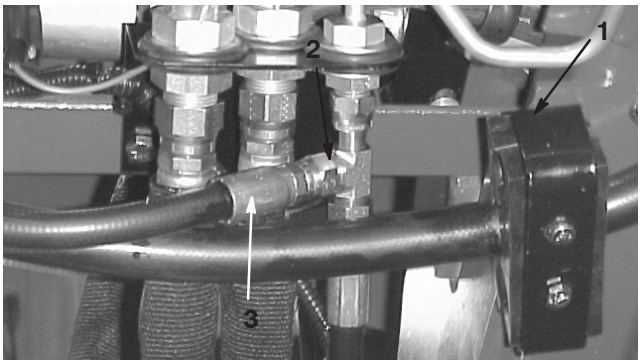

Figure 15

1. Clamp
2. Tee fitting
3. Hose (Part No. 100–3915)

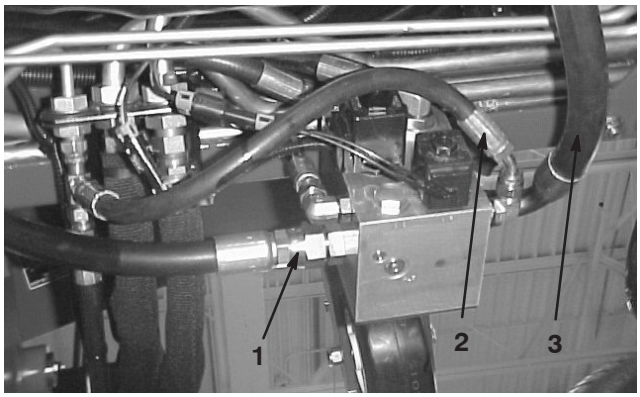

Figure 16

1. Hose (Part No. 100–3913)
2. Hose (Part No. 76–9570)
3. Hose (Part No. 100–3914)

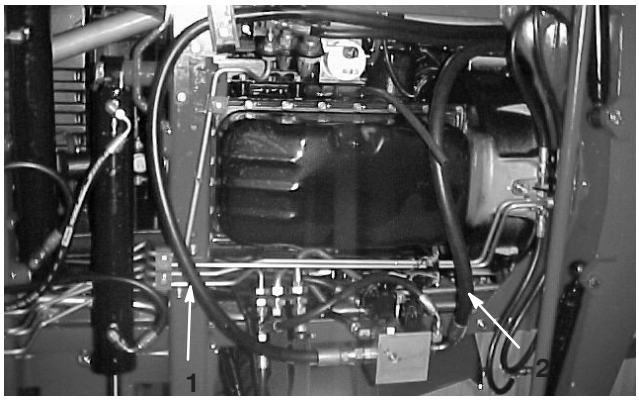

Figure 17

1. Hose (Part No. 100–3913)
2. Hose (Part No. 100–3914)

Installing the Switches and the Wire Harness

1. Mount the four–wheel–drive switch (three position switch) to the right of the ignition switch on the control panel (Fig. 18).

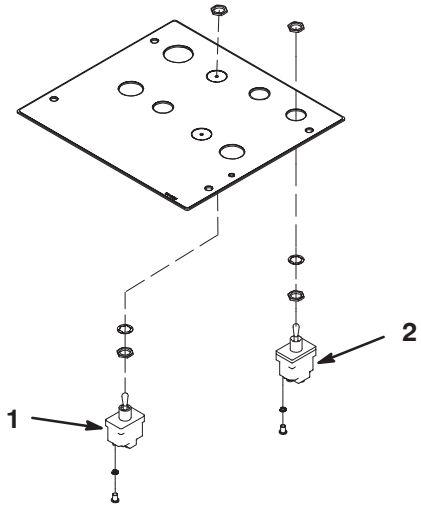

Figure 18

1. Four–wheel–drive toggle switch
2. High/low toggle switch

2. Also on the control panel, disconnect and replace the high/low speed switch (two position switch) (Fig. 18) with the new switch included in the kit. Reattach the wires to the switch as follows:

- Terminal #1=Green/Yellow wire (GN/Y)
- Terminal #2=Black wire (BK)
- Terminal #3=Blue/White wire (BU/W)

3. Using the instructions and the wire harness drawing (Fig. 19), install the new wire harness as follows:

- Starting at the control panel, route the harness under and out the back of the cup holder. The harness should continue straight down the outside of the shrouding to the existing wire harness and run along side of it.
- Unplug the connector from the back of the ignition switch.
- Locate the grey wire with the the female spade terminal coming from the four wheel drive harness and plug it into the vacant cavity in the connector. Make sure it locks into the connector.
- Reconnect the connector into the back of the ignition switch.
- Attach the harness wires with the fork terminals to the appropriate terminals on the four wheel drive switch and the high/low range switch.
- Attach the ground wire ring terminal to the engine block, at the location used for the frame grounding cable.
- Attach the remaining connectors to the switch near the transmission pump and the solenoid coils on the four wheel drive manifold.
- Secure the harness with cable ties to prevent it from getting damaged by hot or moving parts.

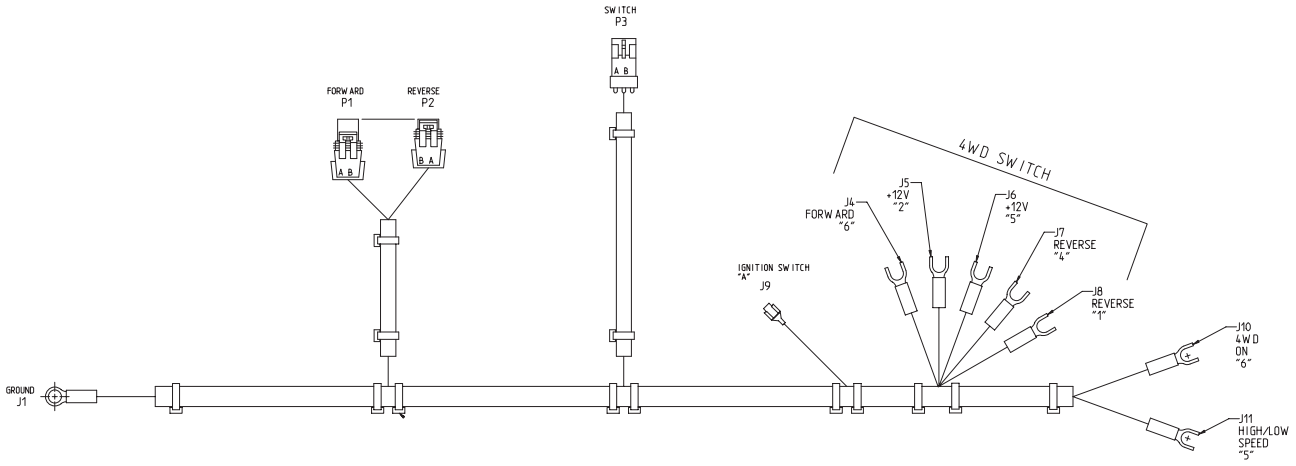

Figure 19

Installing the Bumper Guard

1. Attach the bumper bracket to the frame using eight 3/8–16 x 1–1/4" lg. bolts, washers, and nuts. (Fig. 20).

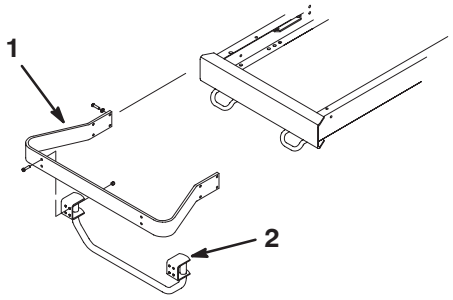

Figure 20

1. Bumper bracket
2. Guard assembly

2. Secure the guard assembly to the bumper bracket with four carriage bolts (Fig. 20).

Installing the Decals

1. Using the dimensions shown in figure 21, locate and affix a 4 wheel drive decal to each side of machine.

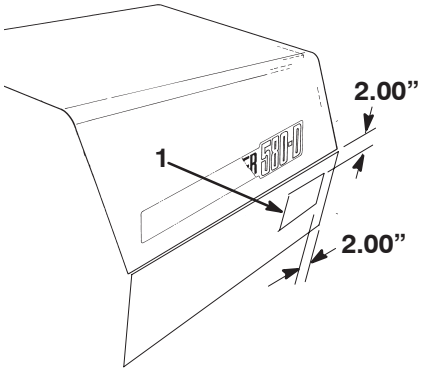

Figure 21

1. Decal

Operation

Four wheel drive is only available in the low range. Place the High/Low Range Switch in the low range to operate the four wheel drive system.

Toggle the switch in the on or forward position to engage the four wheel drive in forward. Toggle the switch in the momentary or reverse position will engage the four wheel drive in reverse.

If the high/low range switch is not placed in the low range when the decks are lowered, the machine will automatically shift into the low range. If the decks are raised into the transport position the high/low range switch must be switched to low and then to high range to re–engage transport speed (high range).

Note: The Four Wheel Drive Kit is designed as a traction assist to the front traction wheels. In wet conditions or during a steep hill climb, loss of traction may occur causing the front tires to spin.

Note: The rear tires will not spin freely causing loss of steering.

Note: Come to a complete stop before engaging or disengaging the four wheel drive.

Note: Refer to Traction Unit Operator's Manual for proper towing procedures.

Note: Mow speed will drop from 7.5 mph to 5.2 mph with 4 wheel drive engaged.

Check Hydraulic Lines

Check the hydraulic lines and hoses for leaks, loose fittings, kinked lines, and loose mounting supports. Make necessary repairs before operating.

Note: Keep areas around the hydraulic system clean from grass and debris build up.

⚠ WARNING

POTENTIAL HAZARD

- **Hydraulic fluid escaping under pressure can penetrate skin and cause injury.**

WHAT CAN HAPPEN

- **Fluid accidentally injected into the skin must be surgically removed within a few hours by a doctor familiar with this form of injury or gangrene may result.**

HOW TO AVOID THE HAZARD

- **Keep body and hands away from pin hole leaks or nozzles that eject high pressure hydraulic fluid.**
- **Use cardboard or paper to find hydraulic leaks.**

Electrical Schematic

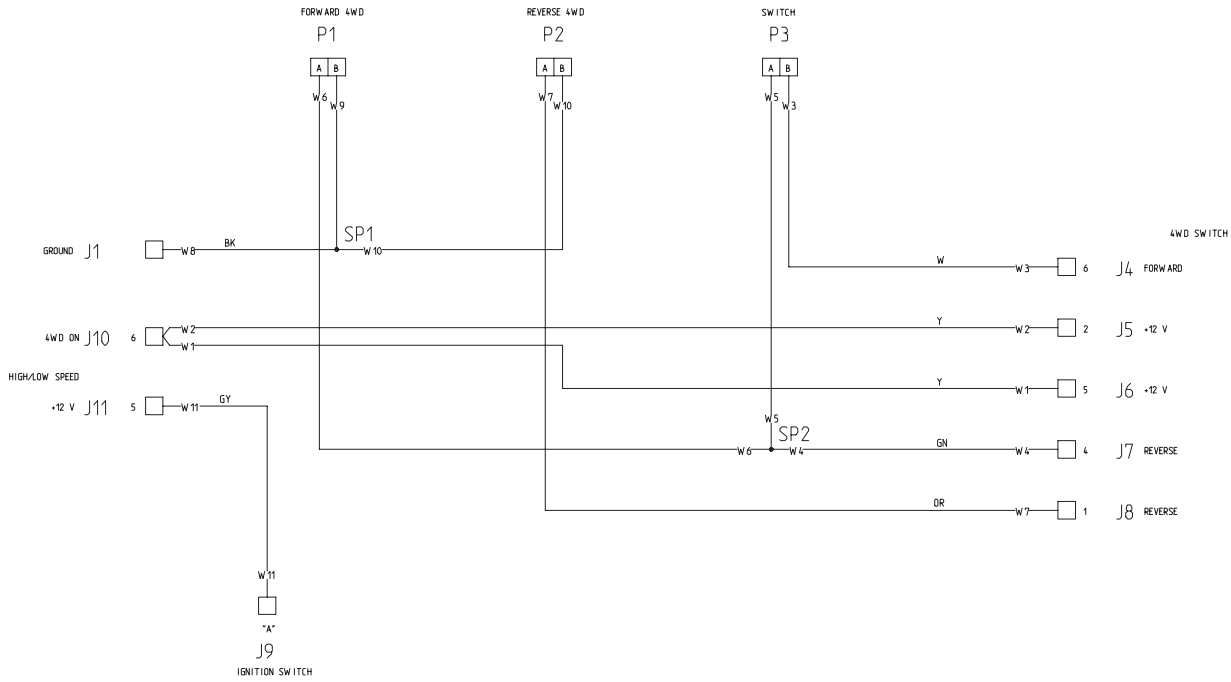

Hydraulic Schematic

