Form No. 3353-855 Rev A

Power Box Rake

for Compact Utility Loaders

Model No. 22425—Serial No. 240000001 and Up

Operator's Manual

Register your product at www.Toro.com

Original Instructions (EN)

Contents

	Page
Introduction	2
Safety	2
Safety and Instruction Decals	3
Specifications	4
Stability Ratings	5
Setup	5
Extending the Caster Wheels	5
Operation	5
Setting the Barrier Gap	5
Starting the Power Rake	6
Using the End Plates	6
Angling the Roller	6
Operating Tips	6
Maintenance	7
Recommended Maintenance Schedule	7
Lubricating the Pivot Points	8
Inspecting and Servicing the Drive Chain	8
Changing the Oil in the Chain Case	8
Storage	9
Troubleshooting	9

Introduction

Read this manual carefully to learn how to operate and maintain your product properly. The information in this manual can help you and others avoid injury and product damage. Although Toro designs and produces safe products, you are responsible for operating the product properly and safely.

You may contact Toro directly at www.Toro.com for product and accessory information, help finding a dealer, or to register your product.

Whenever you need service, genuine Toro parts, or additional information, contact an Authorized Service Dealer or Toro Customer Service and have the model and serial numbers of your product ready. You will find the model and serial number on a plate located on the product.

Write the product model and serial numbers in the space below:

Model No. _____

Serial No. _____

This manual identifies potential hazards and has special safety messages that help you and others avoid personal injury and even death. ***Danger***, ***Warning***, and ***Caution*** are signal words used to identify the level of hazard. However, regardless of the hazard, be extremely careful.

Danger signals an extreme hazard that **will** cause serious injury or death if you do not follow the recommended precautions.

Warning signals a hazard that **may** cause serious injury or death if you do not follow the recommended precautions.

Caution signals a hazard that may cause minor or moderate injury if you do not follow the recommended precautions.

This manual uses 2 other words to highlight information. **Important** calls attention to special mechanical information and **Note:** emphasizes general information worthy of special attention.

Safety

To ensure maximum safety and best performance, and to gain knowledge of the product, it is essential that you and any other operator of the product read and understand the contents of this manual before the engine is ever started.

⚠ This is the safety alert symbol. It is used to alert you to potential personal injury hazards. Obey all safety messages that follow this symbol to avoid possible injury or death.

Improperly using or maintaining this product could result in injury or death. To reduce this potential, comply with the following safety instructions.

⚠ Danger ⚠

Contact with rotating teeth can cause entanglement, severe wounds, and/or death.

- **Keep away from the rotating teeth while operating the power rake.**
- **Keep your hands, feet, other parts of your body, and clothing away from rotating parts.**
- **Before adjusting, cleaning, repairing, and inspecting the power rake, lower the power rake and loader arms to the ground, shut off the engine, and remove the key.**

© 2005 by The Toro Company
8111 Lyndale Avenue South
Bloomington, MN 55420-1196

Contact us at www.Toro.com
All Rights Reserved
Printed in the USA

Danger

If there are buried power, gas, or telephone lines in the work area, you may contact them, causing a shock or an explosion.

Have the property or work area marked for buried lines and do not operate the power rake in marked areas.

Warning

When the engine is off, an attachment in the raised position can gradually lower, possibly pinning or injuring someone.

Always lower the attachment lift each time you shut off the traction unit.

Warning

Hydraulic fluid escaping under pressure can penetrate the skin and cause injury. Fluid injected into the skin must be surgically removed within a few hours by a doctor familiar with this form of injury, or gangrene may result.

- **Keep your body and hands away from pin hole leaks or nozzles that eject high-pressure hydraulic fluid.**
- **Use cardboard or paper to find hydraulic leaks; never use your hands.**

Caution

Hydraulic couplers, hydraulic lines and valves, and hydraulic fluid may be hot. If you contact hot components, you may be burned.

- **Wear gloves when operating the hydraulic couplers.**
- **Allow the traction unit to cool before touching hydraulic components.**
- **Do not touch hydraulic fluid spills.**

Safety and Instruction Decals

Safety decals and instructions are easily visible to the operator and are located near any area of potential danger. Replace any decal that is damaged or lost.

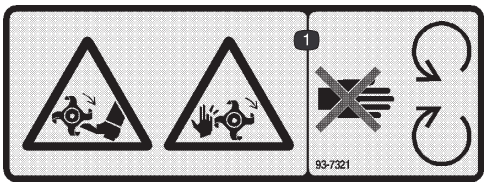

93-7321

1. Cutting/dismemberment hazard of hands and feet, rotating knives—stay away from moving parts.

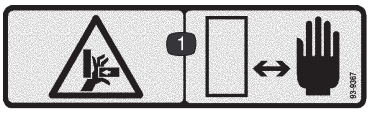

93-9367

1. Crushing hazard of hand—keep hands a safe distance from the hazard area.

100-4708

1. Thrown object hazard—Keep bystanders a safe distance from the traction unit.

Specifications

Note: Specifications and design are subject to change without notice.

Raking width	48 inches (122 cm)
Roller type	Carbide toothed roller 7-inch (18 cm) diameter
Roller angle (angling model only)	20° in both directions
Gap (tube to barrier)	1-1/8 to 1-3/4 inch (2.9 to 4.4 cm) adjustable
Tires	13 x 5.00
Tire Pressure	20 psi (137 kPa)
Weight (angling rake)	510 lbs (232 kg) max.
Oil capacity of the chain case	approx. 1.5 pints (.71 l)

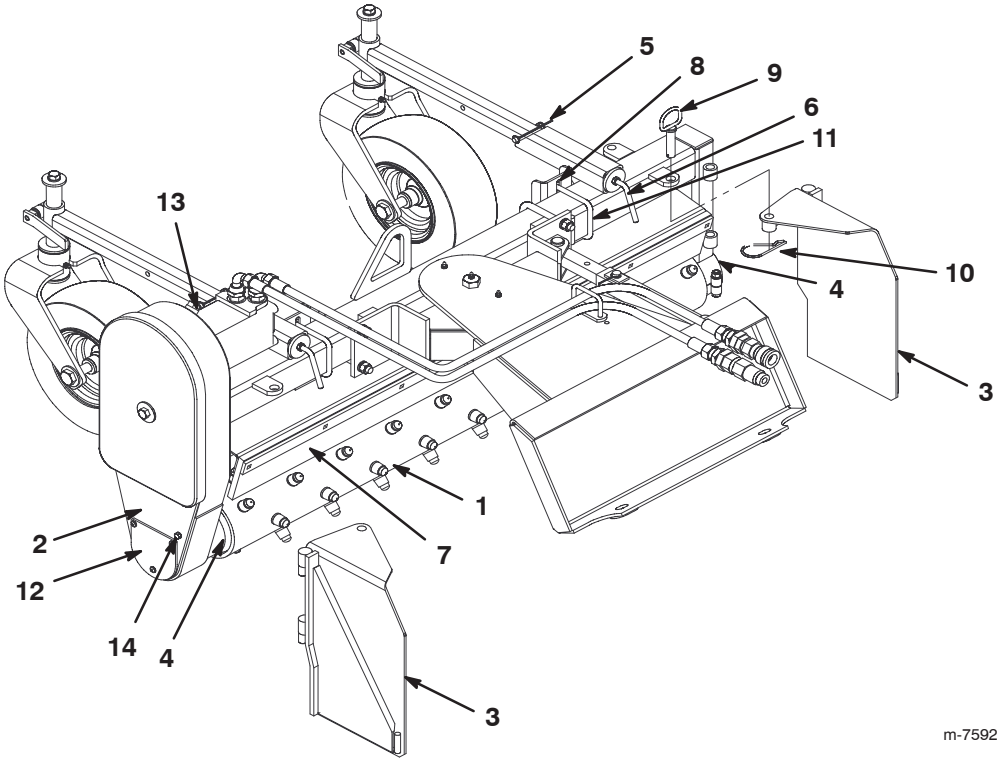

Figure 1

1. Roller
2. Chain case
3. End plate
4. Roller bearing (2)
5. Caster lock pin (2)
6. Caster locking handle (2)
7. Barrier
8. Barrier gap adjustment
9. End plate pin (2)
10. Hairpin (2)
11. U-bolt
12. Oil drain cover
13. Fill hole plug
14. Level hole plug

Stability Ratings

Warning

If you exceed the maximum slope, the traction unit could tip, possibly crushing you or bystanders.

Do not drive the the traction unit on a slope steeper than the maximum recommended slope.

To determine the degree of slope you can traverse with the power rake installed on a traction unit, find the stability rating for the hill position you want to travel in the table below, then find the degree of slope for the same rating and hill position in the Stability Data section of the traction unit *Operator's Manual*.

Orientation	Stability Rating
Front Uphill	B
Rear Uphill	D
Side Uphill 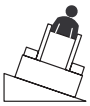	C

Important If you have a traction unit other than the TX, use the counterweight on the traction unit when using the power rake, or the traction unit may become unstable.

Setup

Extending the Caster Wheels

1. Extend the caster arms so that the caster wheels are in the operating position.
2. Tighten the caster locking handles to secure the caster arms in place.

Refer to your traction unit *Operator's Manual* for information on installing and removing attachments from your traction unit.

Operation

Important Lift and move the attachment using the traction unit.

Refer to your traction unit *Operator's Manual* before installing, operating, and removing the power rake.

Setting the Barrier Gap

The normal gap between the roller and barrier for average conditions is about 1-1/4 inch. You can adjust this gap by loosening the U-bolt that holds the barrier mount and sliding it up or down. A wider opening allows more dirt and rock to pass through. For finer raking, reduce the gap, but be careful not to let the roller hit the barrier. The gap should be the same all the way across (Fig. 2).

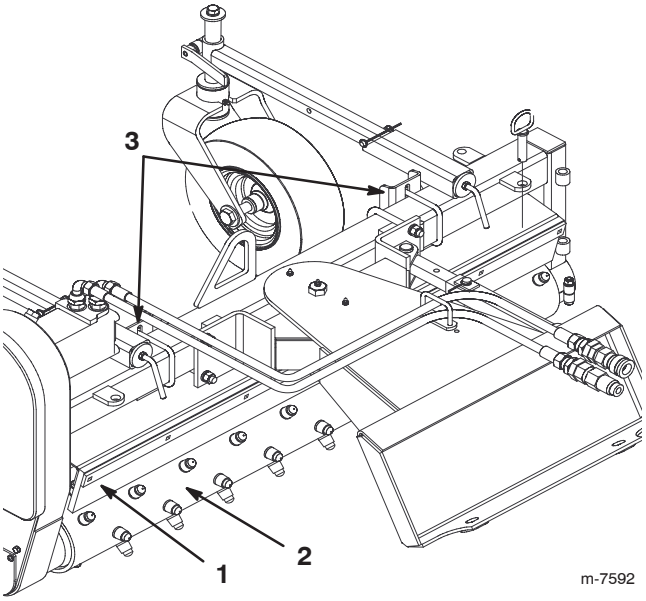

Figure 2

1. Barrier
2. Roller
3. Barrier gap adjustment

Starting the Power Rake

With the end plates mounted in the working position and the rake straight (the end plates parallel with the traction unit track), material can be moved along, filling in the low spots. This attachment is used to clear the ground of rocks, so you do not need to clear all the rocks from the area prior to operating the power rake.

1. Start the traction unit engine.
2. Lower the power rake slowly to the ground.
3. Engage the hydraulic control lever for auxiliary implements.
4. Move the traction unit forward or backward as desired.

   Note: For the roller to operate effectively, rotate it in the opposite direction of the traction unit track. The direction of the roller rotation is controlled by the traction unit hydraulic controls. Refer to the chart below.

Roller Rotation	Travel Direction
↺	←
↻	→

Using the End Plates

The end plates contain the material in front of the roller while the clean material passes between the roller and the barrier. With the end plates mounted in the working position and the rake straight (parallel with traction unit track), the material can be moved, filling in the low spots.

You can mount the end plates to either the front or the back of the power rake, depending on the raking direction. When you move the end plates from front to back, you must move the left one to the right side and the right one to the left side.

To move the end plate, remove the hair pin from the end plate pin, and pull out the pin from the end plate (Fig. 3).

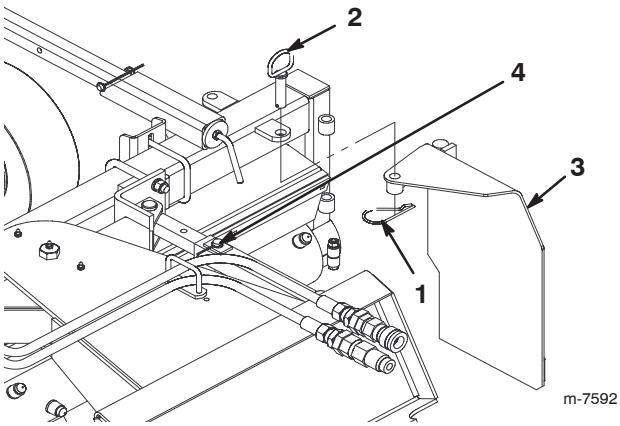

Figure 3

1. Hair pin
2. End plate pin
3. End plate
4. Angle locking pin

Angling the Roller

You can angle the roller 20° in either direction. For windrowing, remove the angle locking pin (Fig. 3), slide the angle mount to a new set of holes, and insert the pin.

Operating Tips

Important Do not drop the power rake onto the ground with the roller turning. Sudden high speed jolts multiply the stress to the drive line and can cause extreme damage.

- Always begin power raking at the slowest ground speed possible. Increase the ground speed if conditions permit.
- Always use full throttle (maximum engine speed).
- If a rock or other obstruction gets into the teeth, stop the hydraulics and drive the traction unit forward until the obstruction is dislodged.
- Reduce the ground speed in rocky conditions. Increase the ground speed if the conditions permit.
- The roller should be level with the ground. The power rake should also be level with the ground front to back. To accomplish this, raise or lower the gauge wheels and use the traction unit's tilt cylinder.
- To allow the roller to penetrate deeper into the ground, loosen the handle and raise the gauge wheels. To raise the roller, lower the gauge wheels.

- Because the chain case end of the roller is heavier than the other end of the roller, set the tire closest to the chain case down 3/4 inch lower than the opposite tire. This will still give an even grade when landscaping.
- You can achieve further depth control by tilting the rake forward on its gauge wheels to raise the roller, or tilt the rake back to raise the gauge wheels and allow the roller to penetrate more deeply.
- Check the air pressure in each tire regularly to maintain an even and consistent grade.
- To break up compacted soil, roll back the attachment plate to take the guide wheels off the ground so that only the toothed roller is in contact with the ground. Control the ground speed to avoid stalling the toothed roller. Remove the end plates to allow material to move out of the way if you are only trying to break up the soil.
- To remove loose debris, tilt the traction unit attachment plate until the guide wheels control the depth of the toothed roller. You can angle the rake at this time for windrowing debris or you can set the rake straight with both end plates installed to collect debris. You can increase the traction unit speed when you do this.
- For finish grading, tilt the rake forward until the teeth of the toothed roller are barely touching the soil. You can increase the traction unit speed to collect the material from the high spots and leave it in the lower areas.
- To thatch grassy areas, tilt the traction unit attachment plate forward to support the rake on the front gauge wheels and the toothed roller raised so that the teeth are just grazing the surface. The travel speed should be slow.

Maintenance

Note: Determine the left and right sides of the machine from the normal operating position.

Recommended Maintenance Schedule

Maintenance Service Interval	Maintenance Procedure
10 Hours	• Check all hardware and tighten all nuts and bolts as needed.
Weekly	• Lubricate all pivot points. • Lubricate the caster axle. • Lightly lubricate the bearing at each end of the roller with 1 or 2 pumps of grease. • Check the tire pressure (Maintain at 20 psi cold).
Monthly	• Inspect the drive chain for stretching. • Check the oil level in the chain case and add oil if necessary.
Quarterly	• Change the oil in the chain case; add 1.5 pints of 85–140 wt. lube.
Storage	• Paint chipped surfaces.

Caution

If you leave the key in the ignition switch, someone could start the engine, seriously injuring you or bystanders.

Remove the key from the ignition switch before performing any maintenance.

Lubricating the Pivot Points

Lubricate the pivot points with general-purpose grease in the locations shown in Figure 4.

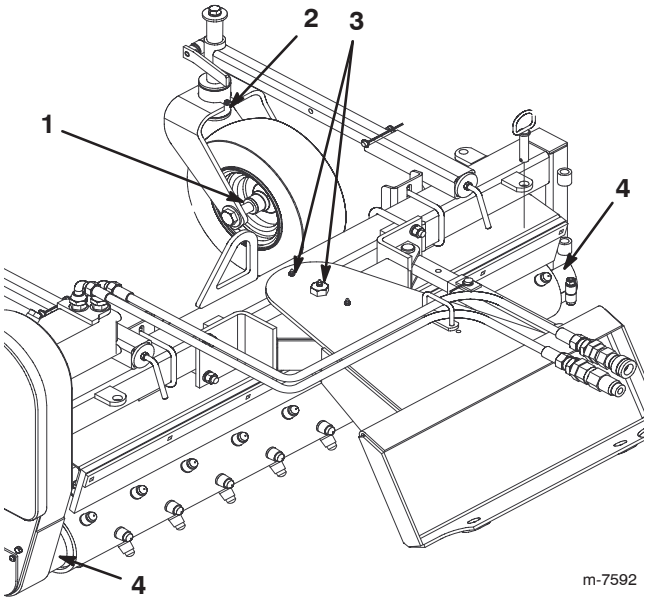

Figure 4

1. Caster axle (2)
2. Caster pivot point (2)
3. Pivot points
4. Roller bearing

Inspecting and Servicing the Drive Chain

Inspect the drive chain monthly. A new chain has a tendency to stretch, so check the chain tension to prevent it from becoming excessively loose.

1. Loosen the bolt that holds the chain case cover.

2. If the chain appears excessively loose, replace the chain or contact an Authorized Service Dealer.

Note: The chain tension is preset with the extension spring.

3. Install the chain cover and bolt and torque the bolt to 75 ft-lb (102 N·m).

Changing the Oil in the Chain Case

Change the chain oil every 200 operating hours.

Oil Type: 85W140

1. Park the power rake on a flat surface and ensure that the chain case is perpendicular to the ground.

2. Lower the loader arms.

3. Shut off the engine and remove the key.

4. Remove the fill hole plug on top of the chain case (Fig. 5).

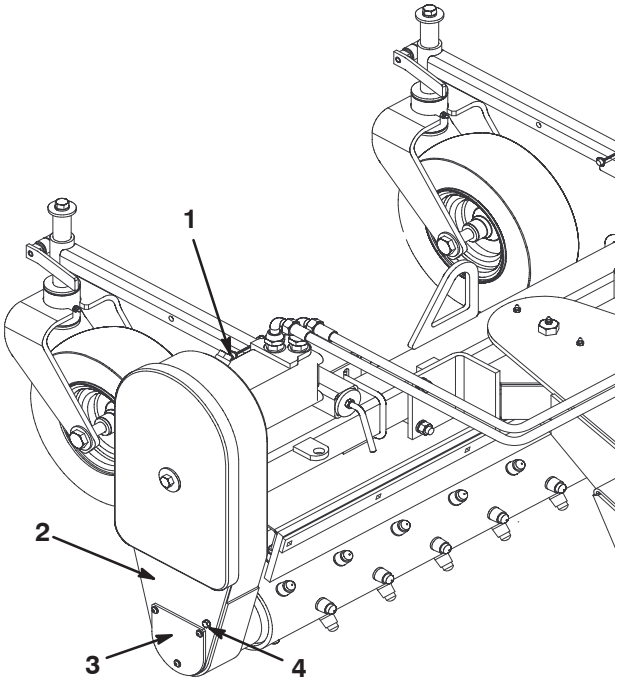

Figure 5

1. Fill hole plug
2. Chain case
3. Oil drain cover
4. Level hole plug

5. Place a large drip pan under the drive chain case.

6. Remove the oil drain cover (Fig. 5).

7. When all the oil has drained from the oil drain cover, install the cover.

8. Pour oil into the fill hole slowly until oil runs out the level hole (Fig. 5).

9. Install the level hole plug and torque it to 100 in-lb (1130 N·cm).

10. Install the fill hole plug (Fig. 5).

11. Wipe up any spilled oil.

12. Recycle oil according to local codes.

Storage

1. Before long term storage, wash the power rake with mild detergent and water.
2. Check and tighten all bolts, nuts, and screws. Repair or replace all damaged or worn parts.
3. Check the oil level in the chain case and add oil if necessary.
4. Ensure that all hydraulic couplers are connected together to prevent contamination of the hydraulic system.
5. Paint all scratched or bare metal surfaces with paint available from an Authorized Service Dealer.
6. Store the power rake in a clean, dry garage or storage area. Cover it to protect it and keep it clean.
7. Store the power rake on a hard and level surface, and block it to prevent it from moving.

Troubleshooting

Problem	Possible Causes	Corrective Action
The power rake does not operate.	1. The hydraulic coupler is not completely connected.	1. Check and tighten all couplers.
	2. The hydraulic coupler is damaged.	2. Check the couplers and replace any that are damaged.
	3. There is an obstruction in a hydraulic hose.	3. Find and remove the obstruction.
	4. The auxiliary valve on the traction unit is not opening.	4. Repair the valve.
	5. There is an obstruction in the power rake.	5. Find and remove the obstruction.
	6. The drive chain is broken.	6. Repair or replace the chain.
	7. The drive chain is loose.	7. Repair or replace the chain.
	8. A hydraulic valve is damaged.	8. Repair or replace the hydraulic valve.
	9. The drive motor is damaged.	9. Repair or replace the drive motor.
Oil is leaking from the traction unit.	1. A seal is worn or damaged.	1. Contact an Authorized Service Dealer.
	2. The hoses are loose or damaged.	2. Contact an Authorized Service Dealer.
	3. The connections are loose or damaged.	3. Contact an Authorized Service Dealer.
	4. The housing is worn or damaged.	4. Contact an Authorized Service Dealer.
	5. The roller is out of position.	5. Contact an Authorized Service Dealer.

TORO®