Form No. 3353-888 Rev A

# Electric Bed Lift Kit

## For For Workman e2050 Utility Vehicle

**Model No. 07260**

**Installation Instructions**

# Installation

## Loose Parts

Use the chart below to verify that all parts have been shipped.

| Step | Description | Qty. | Use |
|---|---|---|---|
| 1 | No parts required | – | Prepare the Machine |
| 2 | Lift bracket, upper | 1 | Install the bed lift |
| | Flange head screw (5/16 x 3/4 inch) | 4 | |
| | Lift cylinder support | 1 | |
| | Lift actuator | 1 | |
| | U-bolts | 2 | |
| | Flange nut (3/8 inch) | 6 | |
| | Carriage bolts (3/8 x 3/4 inch) | 2 | |
| | Clevis pin | 1 | |
| | Cotter pin | 1 | |
| | Nylon washer | 1 | |
| | Steel washer | 3 | |
| 3 | Solenoid | 1 | Install the switch |
| | Bolt, #10 x 3/4 inch | 2 | |
| | Nut, #10 | 2 | |
| | Accessory harness | 1 | |
| | Switch | 1 | |
| | Clevis pin, large | 1 | |
| | Cotter pin | 1 | |

**Note:** Determine the left and right sides of the machine from the normal operating position.

**Step 1**

## Preparing the Machine

### No Parts Required

### Procedure

1. Position the machine on a level surface. Set the parking brake, turn the ignition off, and remove the key.

© 2005—The Toro® Company
8111 Lyndale Avenue South
Bloomington, MN 55420

Register at www.Toro.com.

CE

Original Instructions (EN)
Printed in the USA.
All Rights Reserved

**If you leave the key in the ignition switch, someone could accidently start the machine and seriously injure you or other bystanders.**

**Remove the key from the ignition switch before you do any maintenance.**

2. Raise the bed. Rotate the latch rod upward and raise the box with the other hand.
3. Raise the box to its full height; then lower it slightly to engage the prop rod (Figure 1).

**A raised box could fall and injure persons that are working beneath it.**

- **Always use the prop rod to hold the box up before working under the box.**
- **Remove any load material from the box before raising it.**

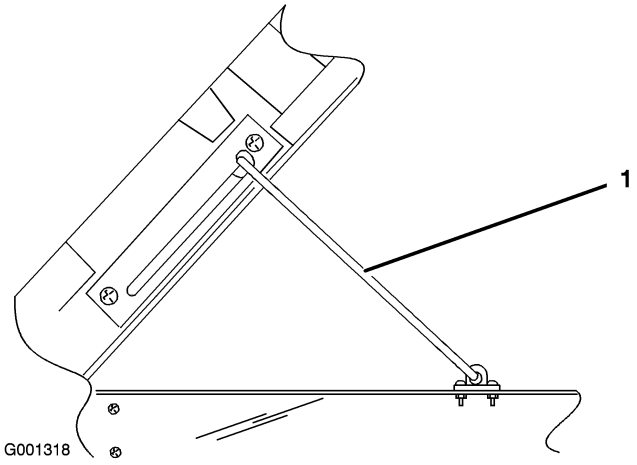


**Figure 1**

1. Prop rod

4. Remove a short battery cable linking any two batteries in the battery bank to remove power from the system (Figure 2).

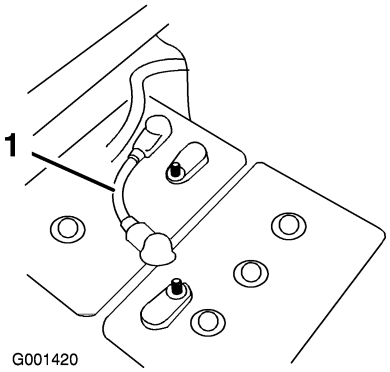


**Figure 2**

1. Short battery cable

5. Remove the 2 flange head screws securing each side of the latch rod bracket to the underside and front face of the box (Figure 3). Retain all parts for future use.

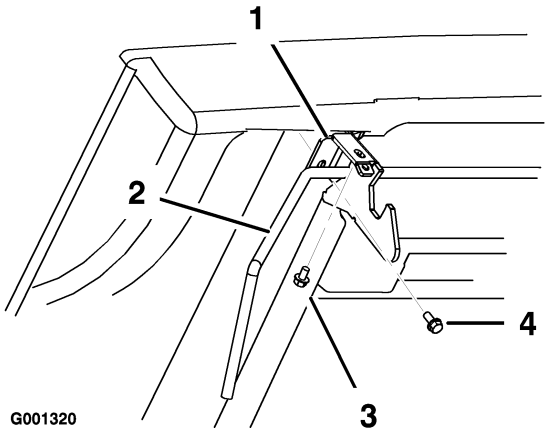


**Figure 3**

1. Latch rod bracket
2. Latch rod
3. Flange head screw, inside front face of box
4. Flange head screw, underside of box

**Step**

# 2

# Installing the Bed Lift

## Parts needed for this step:

| | |
|---|---|
| 1 | Lift bracket, upper |
| 4 | Flange head screw (5/16 x 3/4 inch) |
| 1 | Lift cylinder support |
| 1 | Lift actuator |
| 2 | U-bolts |
| 6 | Flange nut (3/8 inch) |
| 2 | Carriage bolts (3/8 x 3/4 inch) |
| 1 | Clevis pin |
| 1 | Cotter pin |
| 1 | Nylon washer |
| 3 | Steel washer |

## Procedure

1. Remove the screws from the braces on the underside of the box in the positions shown in (Figure 4).
2. Mount the upper lift bracket to the underside of the box with 6 flange head screws (5/16 x 3/4 inch) from loose parts and removed previously. Position the bracket as shown in Figure 4.

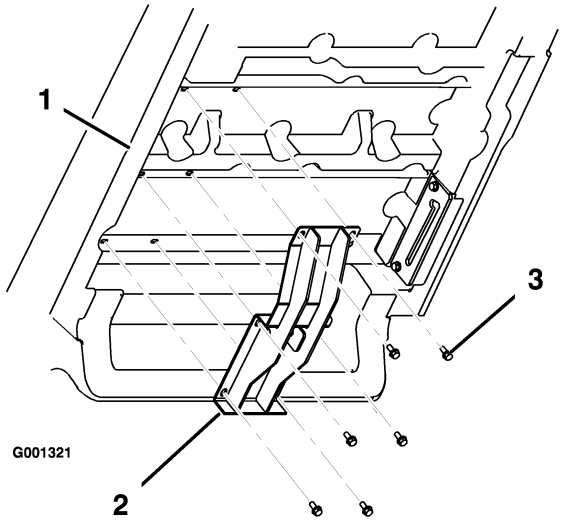


**Figure 4**

1. Bed
2. Upper lift bracket
3. Flange head screw, 5/16 x 3/4 inch

3. Loosely mount the lift cylinder support to the right end of the rear axle with 2 U-bolts and 4 flange nuts (3/4 inch) while aligning the mounting holes with the holes in the battery tray (Figure 5).

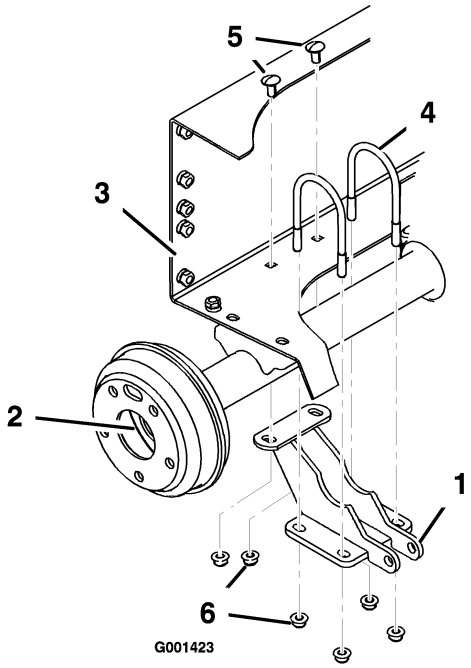


**Figure 5**

1. Lift cylinder support
2. Right end of the axle
3. Rear frame battery tray
4. U-bolt
5. Carriage bolt, 3/8 x 3/4 inch
6. Flange nut, 3/8 inch

4. Secure the lift cylinder support to the rear frame with 2 carriage bolts (3/8 x 3/4 inch) and 2 flange nuts (3/8 inch). Tighten the 4 flange nuts on the U-bolts equally to make sure the bracket is aligned to the axle. Tighten the two nuts securing the rear of the bracket to the rear frame (Figure 5).
5. Mount the bottom end of the lift actuator to the lift cylinder support with a clevis pin and

cotter pin. Position the components as shown in Figure 6.

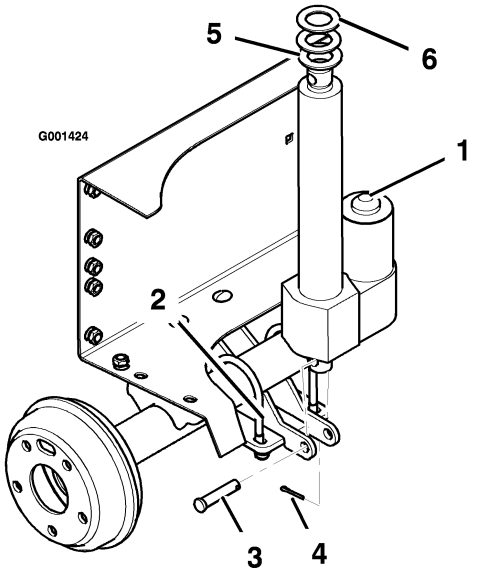


**Figure 6**

1. Actuator
2. Lift cylinder support
3. Clevis pin
4. Cotter pin
5. Nylon washer
6. Steel washers

6. Slide a nylon washer onto the actuator rod, then slide on one steel washer.

   **Note:** Additional steel washers are provided and can be used to adjust the lower stop of the actuator rod.

**Step 3**

# Installing the Switch

## Parts needed for this step:

| | |
|---|---|
| 1 | Solenoid |
| 2 | Bolt, #10 x 3/4 inch |
| 2 | Nut, #10 |
| 1 | Accessory harness |
| 1 | Switch |
| 1 | Clevis pin, large |
| 1 | Cotter pin |

## Procedure

1. Remove the hood to access the main harness and solenoid plate.
2. Install the solenoid on the existing plate using two bolts (#10 x 3/4 inch) and two nuts (#10) as shown in Figure 7.

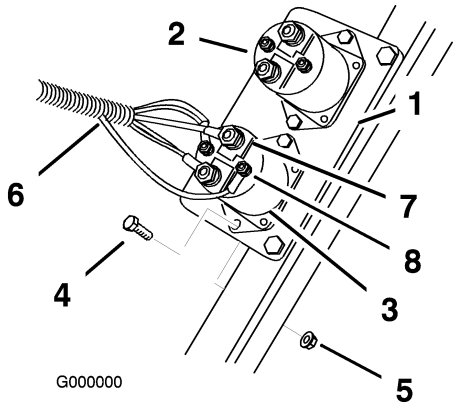


**Figure 7**

1. Solenoid plate
2. Solenoid, existing
3. Solenoid, new
4. Bolt, #10 x 3/4 inch
5. Nut, #10
6. Accessory harness
7. Large posts
8. Small posts

3. Attach the accessory harness to the solenoid. Connect a large ring to each large post. Connect a small ring wire to each small post. Secure the wires with the existing fasteners.
4. Locate the optional 48v output connector as labeled on the main harness and remove the

cap. Connect the accessory harness to the 48v output connector as shown in Figure 8.

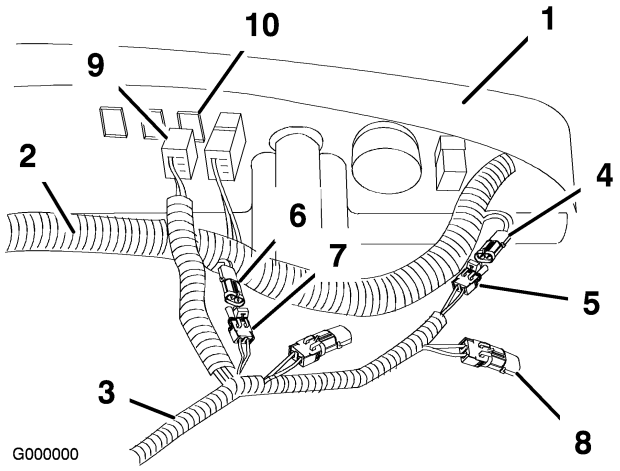


**Figure 8**

1. Dash, under side
2. Main harness
3. Accessory harness
4. 48v connector, from main harness
5. 48v connector, from accessory harness
6. Box lift kit connector, from main harness
7. Box lift kit connector, from accessory harness
8. Cap 48v connector extension, from accessory harness
9. Switch connector
10. Plug in dash

5. Locate the box lift kit connector on the main harness and remove the cap. Attach accessory harness to box lift kit connector. wire from main harness.
6. Cap 48v output connector on accessory harness.
7. Place the switch connector into position behind the plug in the dash as shown in Figure 8.
8. Remove the plug from the hole in the right side of the dash (Figure 9).
9. Plug the switch into the accessory connector in the dash. Insert the switch into the hole in the dash (Figure 9).

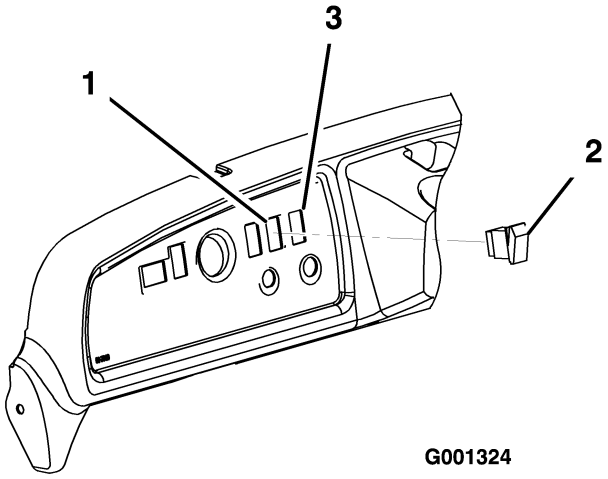


**Figure 9**

1. Plugged hole
2. Switch
3. Cut new hole (if required).

**Loose or improperly secured battery connections could damage the vehicle and cables causing sparks. Sparks can cause the battery gasses to explode, resulting in personal injury.**

**Always ensure the battery polarity when making connections.**

10. Plug the switch into the harness connector in the dash. Insert the switch into the hole in the dash (Figure 9).
11. Coat the battery terminals with Toro battery terminal protector.
12. Replace the short battery cable removed previously. Torque the nuts securing all battery cables to 120 to 180 inch-lb (13.5 to 21 N·m).
13. Press the switch upward to extend the actuator rod until it is aligned with the mounting holes in the upper lift bracket. Secure the rod to the bracket with the large clevis pin and cotter pin.
14. Remove the screws and clip securing the prop rod to the frame rail (Figure 10).

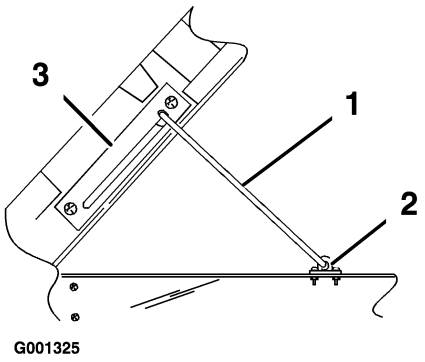


**Figure 10**

1. Prop rod
2. Prop rod clip
3. Prop rod bracket

15. Remove the screws securing the prop rod bracket to the underside of the box. Remove the retainer securing the rod to the bracket and remove the rod (Figure 10). Retain the prop rod components for future use.

    **Note:** If the electric box lift is ever removed, install the prop rod, prop rod clip, and prop rod bracket.

# Operation

## Raising the Bed

**Driving the vehicle with the cargo box raised may cause the vehicle to tip or roll easier. The box structure may become damaged if the box is raised for an extended period of time while operating the vehicle.**

- **Only operate the vehicle when the cargo box is down.**
- **After a load has been dumped, lower the cargo box.**

1. Turn the ignition key to the On position.
2. Push the top of the switch to raise the box.

    **Important: When a ratcheting noise is heard, the box lift is completely extended or retracted. Do not continue pressing the switch.**

## Lowering the Bed

**The weight of the box may be heavy. Hands or other body parts could be crushed.**

**Keep hands and other body parts clear when lowering the box.**

1. Push the bottom of the switch to lower the box.

    **Note:** The bed will deform slightly before the actuator clutch begins to engage. If the bed floor deforms more than 1/4 inch add additional steel washers to the raise the lower stop of the actuator rod. When bed is pulled tight to the vehicle frame, but the bed floor does not deform more than 1/4 inch the lift has been adjusted correctly.

2. Turn the ignition key to the Off position and remove the key.




**Count on it.**