Form No. 3353–604 Rev B

DFS Bagger Adapter Kit

for Mounting 2005 and After Baggers on 2004 and Before Z500 Series Z Masters

Part No. 110–0350

Installation Instructions

Note: Use the existing hardware that came with the bagger to install the bagger mounting bracket in Step 3.

Setup

Note: Determine the left and right sides of the machine from the normal operating position.

Loose Parts

Note: Use the chart below to verify all parts have been shipped.

Step	Description	Qty.	Use
1	No parts needed		Removing the Drive Wheels
2	No parts needed		Removing the Roll Over Protection System (ROPS)
3	Side bracket—right Side bracket—left Stiffener bracket	1 1 2	Installing bagger mounting bracket
4	Bolt, 3/8 x 1 inch Flange Nut, 3/8 inch Curved washer Spacer	6 6 6 4	Installing the side brackets to the machine
5	No parts needed		Tightening all mounting bolts
6	No parts needed		Installing the Drive Wheels

© 2005 by The Toro Company
8111 Lyndale Avenue South
Bloomington, MN 55420-1196

Original Instructions (Language abbreviation)

Contact us at www.Toro.com
All Rights Reserved
Printed in the USA

Step 1

No parts needed for this step.

Removing the Drive Wheels

Danger

Mechanical or hydraulic jacks may fail to support machine and cause a serious injury.

- **Use jack stands when supporting machine.**
- **Do not use hydraulic jacks.**

1. Loosen the drive wheel nuts.
2. Raise the rear of the machine and support with jack stands (Fig. 1).

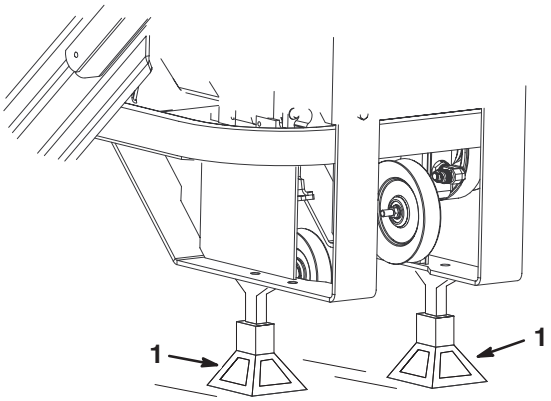

Figure 1

1. Jack stand

3. Remove the nuts and the drive wheels (Fig. 2).

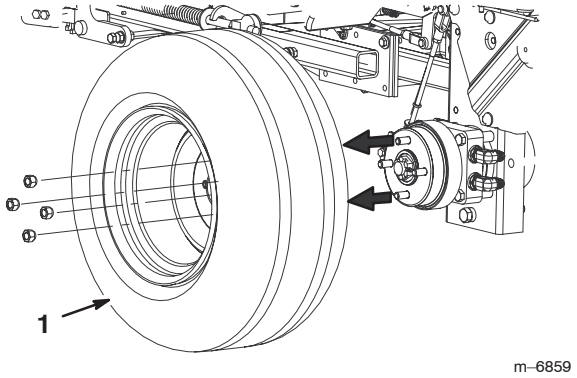

Figure 2

1. Drive wheel

Step

2

No parts needed for this step.

Removing the Roll Over Protection System (ROPS)

Remove the following fasteners (Fig. 3) securing each (right and left) roll bar section to the frame:

- Lock nut (3/8 inch) and curved washer. Do not remove bolt from frame.
- Bolt (3/8 x 1 inch), curved washer and flange nut (3/8 inch).
- Bolt (3/8 x 1 inch), curved washer and flange nut (3/8 inch).
- Bolt (3/8 x 4-1/2 inches), curved washer and flange nut (3/8 inch).

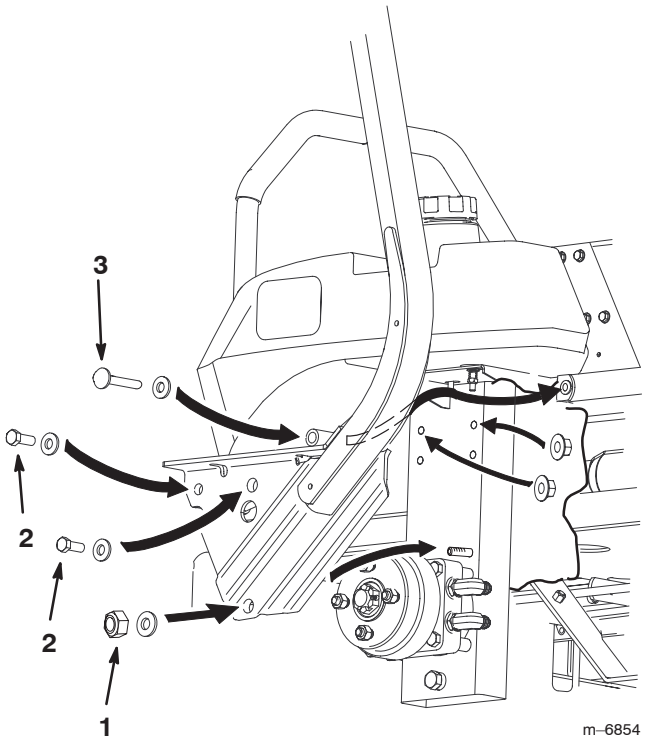

Figure 3

1. Lock nut, 3/8 inch & curved washer
2. Bolt, 3/8 x 1 inch, curved washer & flange nut, 3/8 inch (2)
3. Bolt, 3/8 x 4–1/2 inches, curved washer & flange nut, 3/8 inch

Step

3

Parts needed for this step:

- 1 Side bracket—right
- 1 Side bracket—left
- 2 Stiffener brackets

Note: Use the existing hardware that came with the bagger to install the bagger mounting bracket.

If you have a **liquid cooled machin**e, go to page 5 for Installing the Bagger Mounting Bracket onto a Liquid Cooled Machine.

If you have an **air cooled machine**, use the following instructions for Installing the Bagger Mounting Bracket onto a Air Cooled Machine.

Installing the Bagger Mounting Bracket onto an Air Cooled Machine

Important Do not tighten any bolts until both side brackets and bagger mounting bracket are fit loose on the machine.

Refer to Tightening the Mounting Bolts, on page 7, for the correct procedure to tighten the bolts.

Installing the Bagger Mounting Bracket to the Side Brackets (Air Cooled)

Important When installing the bagger bracket for an air cooled machine, use only 2 long frame spacers; 1 per each side (Fig. 4).

1. Install the side brackets to the bagger mounting bracket (Fig. 4).
2. In the top two holes, install 2 bolts (3/8 x 1–1/2 inch), 2 flange nuts (3/8 in.) one long frame spacer, and one short frame spacer (Fig. 4).

Note: Make sure the long frame spacers are installed as shown in figure 4.

3. In the bottom hole, install a bolt (3/8 x 1–1/4 inch) and a flange nut (3/8 in.) (Fig. 4).
4. Install a bracket stiffener to the side bracket and bagger mounting bracket. Use 4 bolts (3/8 x 3/4 inch) and 4 flange nuts (3/8 in.) (Fig. 4).
5. Repeat the previous steps for the opposite side.

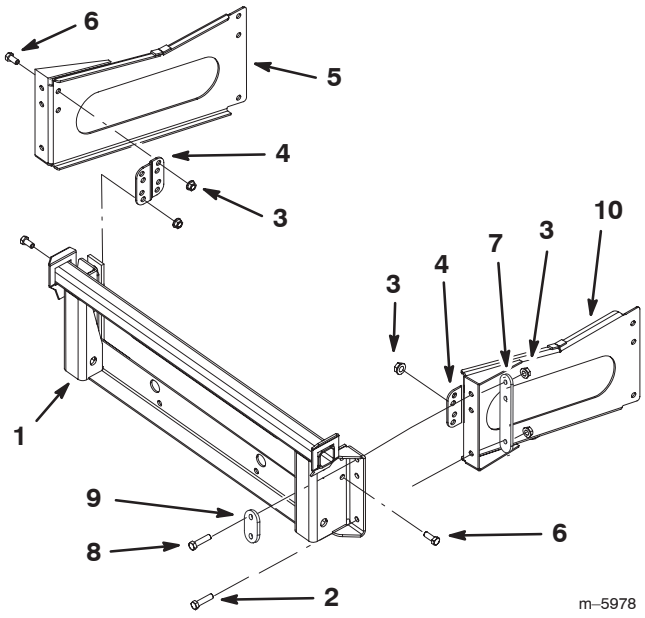

Figure 4

1. Bagger mounting bracket
2. Bolt, 3/8 x 1–1/4 inch
3. Flange nut, 3/8 inch
4. Bracket stiffener
5. Left side bracket
6. Bolt, 3/8 x 3/4 inch
7. Long frame spacer
8. Bolt, 3/8 x 1–1/2 inch
9. Short frame spacer
10. Right side bracket

Installing the Bagger Mounting Bracket onto an Air Cooled Machine

Important When installing the bagger onto an air cooled machine, use the air cooled spacer (Fig. 5).

1. Pull the bottom of the roll bar away from the frame and slide the side braket between the machine frame and the ROPS frame (Fig. 3). Repeat for the opposite side of the machine.
2. Install the bagger mounting bracket to the rear frame of the machine (Fig. 5).
3. In the top two holes, install 2 bolts (3/8 x 1–3/4 inch), 2 flange nuts (3/8 in.) and the air cooled frame spacer (Fig. 5).

4. In the bottom two holes, install 2 bolts (3/8 x 1–1/4 inch) and 2 flange nuts (3/8 in.) (Fig. 5).

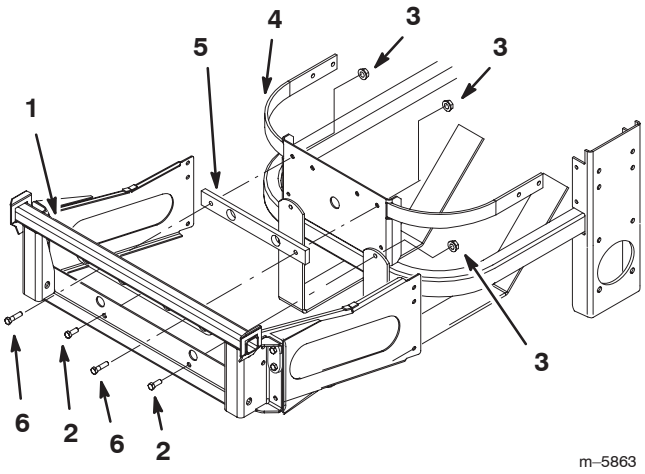

Figure 5

1. Bagger mounting bracket
2. Bolt, 3/8 x 1–1/4 inch
3. Flange nut, 3/8 inch
4. Bumper
5. Air cooled frame spacer
6. Bolt, 3/8 x 1–3/4 inch

Installing the Bagger Mounting Bracket onto a Liquid Cooled Machine

Important Do not tighten any bolts until both side brackets and bagger mounting bracket are fit loose on the machine.

Refer to Tightening the Mounting Bolts, on page 7, for the correct procedure to tighten the bolts.

Installing the Bagger Mounting Bracket to the Side Brackets (Liquid Cooled)

Important When installing the bagger onto a liquid cooled machine, the rear bumper plate must be removed. Use 4 long frame spacers for this installation, 2 per each side (Fig. 6).

1. Install the side brackets to the bagger mounting bracket (Fig. 6).
2. In the top two holes, install 2 bolts (3/8 x 1–1/2 inch), 2 flange nuts (3/8 in.), 2 long frame spacers, and one short frame spacer (Fig. 6).

Note: Make sure the long frame spacers are installed as shown in Figure 6.

3. In the bottom hole, install a bolt (3/8 x 1–1/4 inch) and a flange nut (3/8 in.) (Fig. 6).
4. Install a bracket stiffener to the side bracket and bagger mounting bracket. Use 4 bolts (3/8 x 3/4 inch) and 4 flange nuts (3/8 in.) (Fig. 6).
5. Repeat the previous steps for the opposite side.

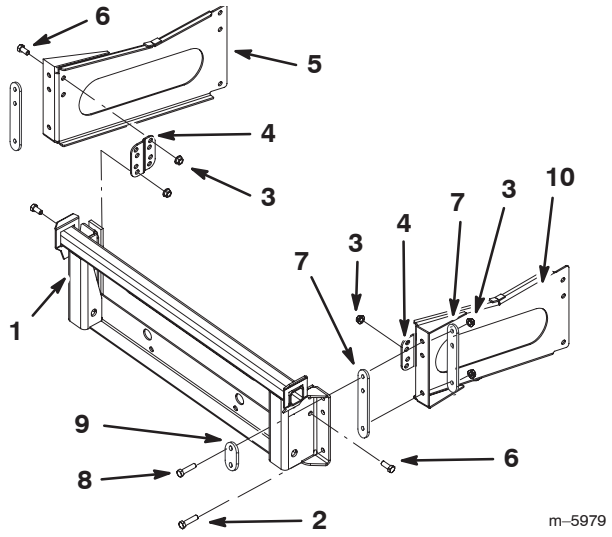

Figure 6

1. Bagger mounting bracket
2. Bolt, 3/8 x 1–1/4 inch
3. Flange nut, 3/8 inch
4. Bracket stiffener
5. Left side bracket
6. Bolt, 3/8 x 3/4 inch
7. Long frame spacer
8. Bolt, 3/8 x 1–1/2 inch
9. Short frame spacer
10. Right side bracket

Installing the Bagger Mounting Bracket onto a Liquid Cooled Machine

1. Pull the bottom of the roll bar away from the frame and slide the side braket between the machine frame and the ROPS frame (Fig. 3). Repeat for the opposite side of the machine.
2. Install the bagger mounting bracket to the rear frame of the machine (Fig. 7).
3. In the top two holes, install 2 bolts (3/8 x 1–3/4 inch) and 2 flange nuts (3/8 in.) (Fig. 7).
4. In the bottom two holes, install 2 bolts (3/8 x 1–1/4 inch) and 2 flange nuts (3/8 in.) (Fig. 7).

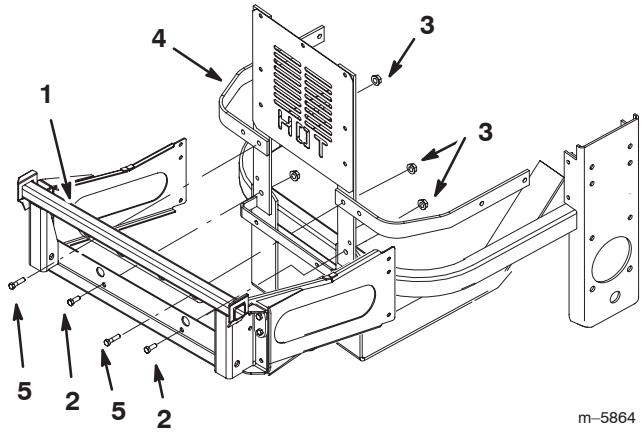

Figure 7

1. Bagger mounting bracket
2. Bolt, 3/8 x 1–1/4 inch
3. Flange nut, 3/8 inch
4. Bumper
5. Bolt, 3/8 x 1–3/4 inch

Step 4

Parts needed for this step:

- 6 Bolts, 3/8 x 1–1/2 inch
- 6 Flange Nuts, 3/8 inch
- 6 Curved washers
- 4 Spacers

Installing the Side Brackets to the Machine

Important Do not tighten any bolts until both side brackets and bagger mounting bracket are fit loose on the machine.

Refer to Tightening the Mounting Bolts, on page 7, for the correct procedure to tighten the bolts.

1. Install the bagger side plates and the roll bar sections (Fig. 8) to each side of the mower using the following fasteners:

- Lock nut (3/8 inch) and curved washer (Previously removed).
- Bolt (3/8 x 4-1/2 inches), curved washer, spacer and flange nut (3/8 inch) (Previously removed).
- Bolt (3/8 x 1–1/2 inch), curved washer, spacer and flange nut (3/8 inch) (New).
- Bolt (3/8 x 1–1/2 inch), curved washer and flange nut (3/8 inch) (New).
- Bolt (3/8 x 1–1/2 inch), curved washer and flange nut (3/8 inch) (New).

Note: Make sure the curved washers and spacers are installed as shown in figure 8.

Note: Hydraulic lines may need to be adjusted when installing the side brackets onto the machine. This will allow for fastener clearance.

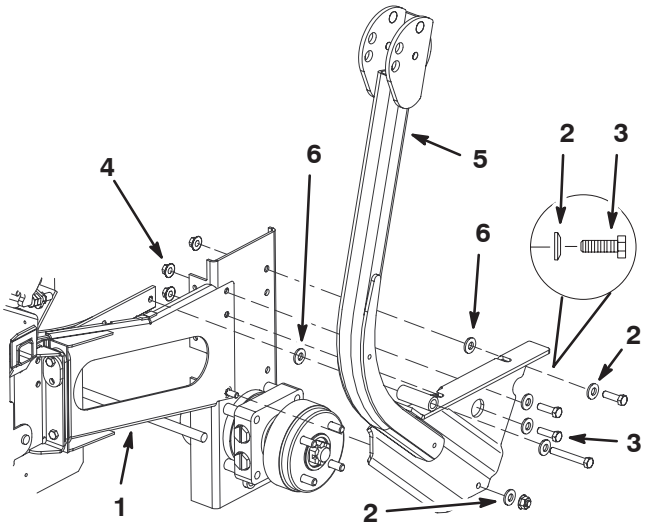

Figure 8

1. Side bracket
2. Curved washer, 3/8 inch
3. Bolt, 3/8 x 1–1/2 inch
4. Flange nut, 3/8 inch
5. ROPS
6. Spacer

Step 5

No parts needed for this step.

Tightening all Mounting Bolts

The following steps are the correct sequence to tighten the side brackets and the bagger mounting bracket.

All 3/8 inch mounting bolts need to be torqued to **35 ft.–lb. (48 N•m).**

1. Tighten the bagger mounting bracket to the rear frame first (Figures 5 or 7).
2. Tighten the bagger mounting bracket to the side brackets (Figures 4 or 6).
3. Tighten the bracket stiffeners to both the side plates and the bagger mounting bracket (Figures 4 or 6).
4. Tighten the side brackets to the side of the mower (Fig. 8).

Step 6

No parts needed for this step.

Installing The Drive Wheels

1. Mount the wheels with the valve stem to the outside and secure them with the nuts previously removed (Fig. 9).
2. Torque the nuts to 95 ft-lb (128 N·m).

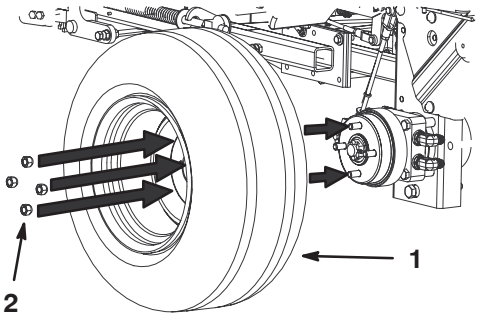

Figure 9

1. Drive wheel
2. Nuts

3. Lower the machine onto the drive wheels.


TORO®