FORM NO. 3313-460

TORO®

MODEL NO. 51325-8000001 & UP

PARTS CATALOG

TORO TRIMMER 1100

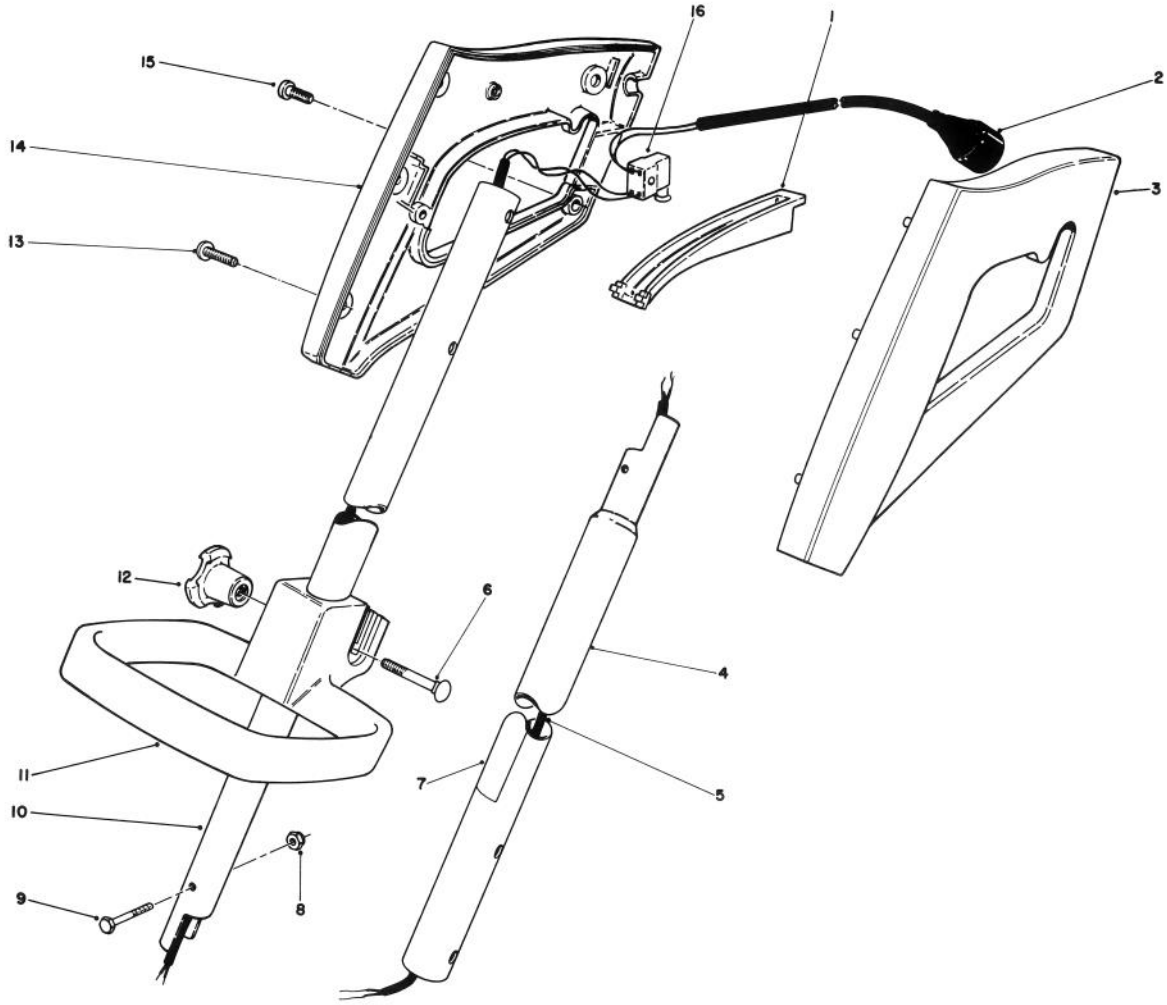

HANDLE ASSEMBLY

Ref. No.	Part No.	Description	No. Used
1	64-4540	Bar Switch	1
2	46-8850	Power Cord	1
3	64-4530	Grip — Left Handle	1
4	62-1870	Tube — Lower	1
5	62-1813	Wiring Harness	1
6	33-5790	Carriage Bolt	1
7	34-3270	Decal — Serial No. Replacement	1
8	3296-12	Locknut	1

Ref. No.	Part No.	Description	No. Used
9	33-8950	Machine Screw	1
10	62-1800	Tube — Upper	1
11	61-8900	Adjustable Handle	1
12	62-1920	Knob	1
13	32104-121	Screw	4
14	64-4520	Grip — Right Handle	1
15	32104-118	Screw — Thread Forming	1
16	64-4930	Switch — Single Speed	1

© The Toro Company — 1988

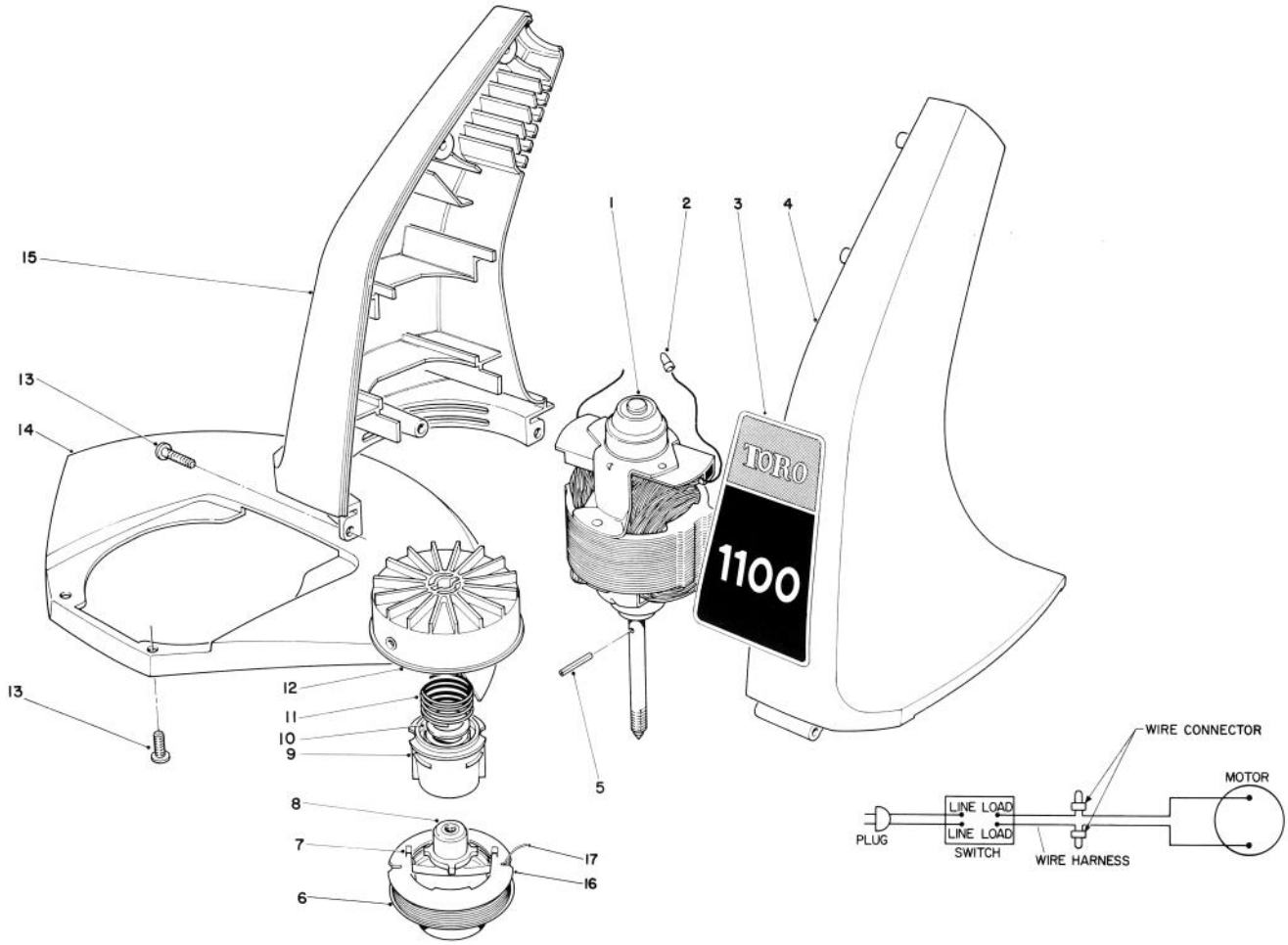

MOTOR AND HOUSING ASSEMBLY

Ref. No.	Part No.	Description	No. Used
1	34-2790	Motor	1
2	218-496	Wire Connectors	2
3	33-8920	1100 Decal	1
4	34-3660	Housing — Left Hand	1
5	32121-88	Roll Pin	1
6	88005	50', .065 Dia. Cutting Line Prewound on Spool	1
7	33-8940	Saddle Clip	1
8	42-6050	Driver	1
9	33-6230	Core	1

Ref. No.	Part No.	Description	No. Used
10	3256-42	Washer	1
11	29-7130	Spring	1
12	33-8970	Drum With Eyelet	1
13	32104-121	Screw	4
14	33-8831	Shield	1
15	34-3650	Housing — Right Hand	1
16	29-7383	Empty Spool	1
17	88003	50' Coil — .065" Cutting Line In Coil	1
*	62-1820	Loose Parts	1

*Not Illustrated