FORM NO. 3313-461

TORO

MODEL NO. 51255-8000001 & UP

PARTS CATALOG

TORO TRIMMER 1010

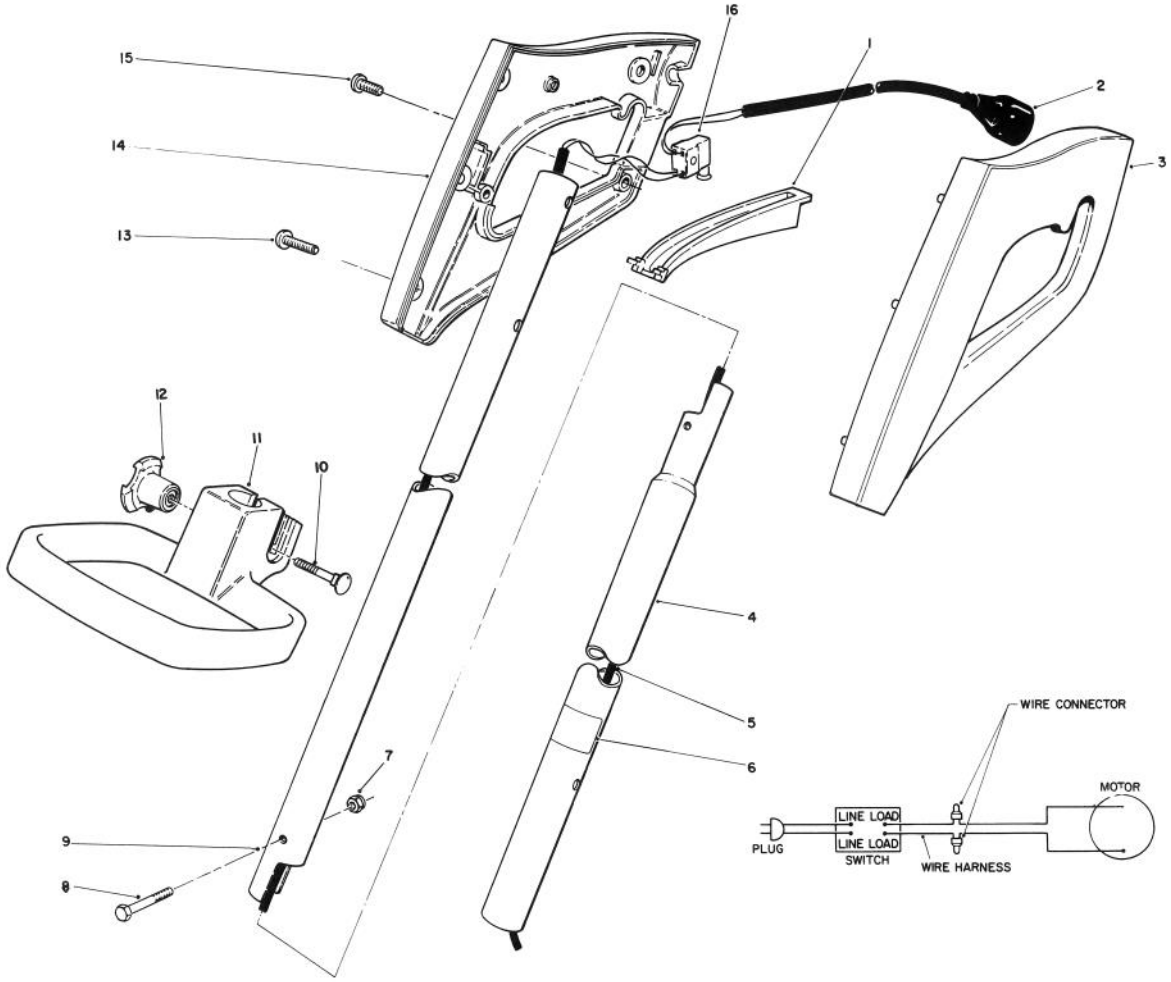

HANDLE ASSEMBLY

Ref. No.	Part No.	Description	No. Used
1	64-4540	Bar Switch	1
2	46-8850	Plug — Pig Tail	1
3	64-4530	Grip — L.H.	1
4	62-1860	Tubing — Lower Extension	1
5	62-1811	Wire Harness	1
6	34-3270	Decal — Serial No. Replacement	1
7	3296-12	Locknut	1
8	33-8950	Screw — Machine Hex Hd.	1

Ref. No.	Part No.	Description	No. Used
9	62-1800	Tubing — Upper Extension	1
10	33-5790	Carriage Bolt	1
11	61-8900	Handle — Adjustable	1
12	62-1920	Knob — Adjustable	1
13	32104-121	Screw — Cross Recess Pan Head Thread Forming	4
14	64-4520	Grip R.H.	1
15	32104-118	Screw — Thread Forming	1
16	64-4930	Switch — Single Speed	1

© The Toro Company — 1988

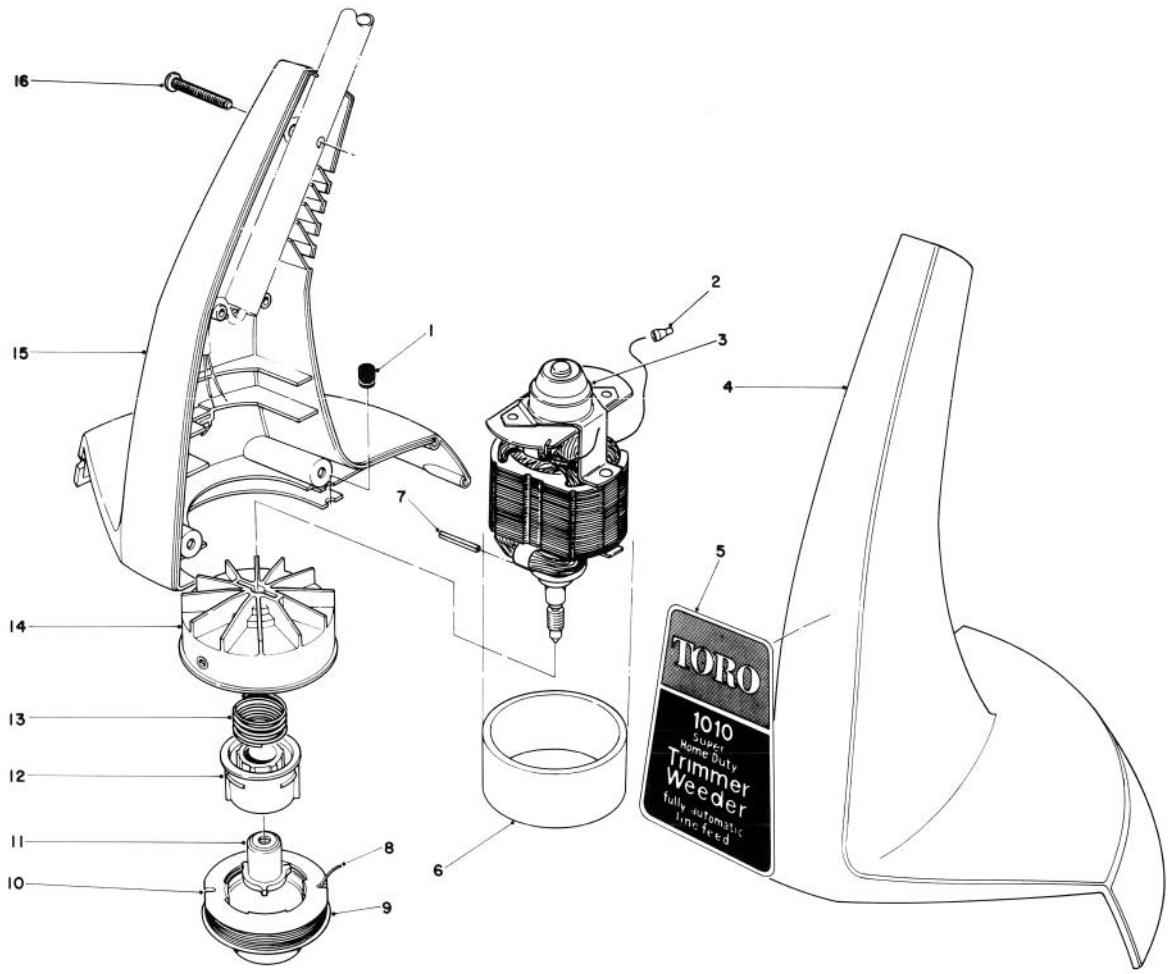

MOTOR AND HOUSING ASSEMBLY

Ref. No.	Part No.	Description	No. Used
1	33-8710	Grommet	1
2	218-496	Electric Connector	2
3	34-2580	Motor	1
4	34-4390	Housing — L.H.	1
5	34-5740	Decal — Housing	1
6	34-4290	Dampening Sleeve	1
7	32121-88	Coil Pin	1
8	88011	30' Coil — .050 Cutting Line In Spool	1
9	44-5520	Spool Cap	1

Ref. No.	Part No.	Description	No. Used
10	88015	30', .050 Dia. Cutting Line Prewound On Spool	1
11	34-9100	Driver — Detent	1
12	29-8120	Spool Core	1
13	29-8230	Spring — Compression	1
14	33-8680	Fan Hub Assembly	1
15	34-5731	Housing Assembly, R.H.	1
16	32104-121	Cross Recess Pan Hd. Thread Forming Screw	6
*	34-2692	Loose Parts	1

*Not Illustrated