FORM NO. 3313-468

TORO®

MODEL NO. 16575-8000001

PARTS CATALOG

21" H.P. SIDE DISCHARGE

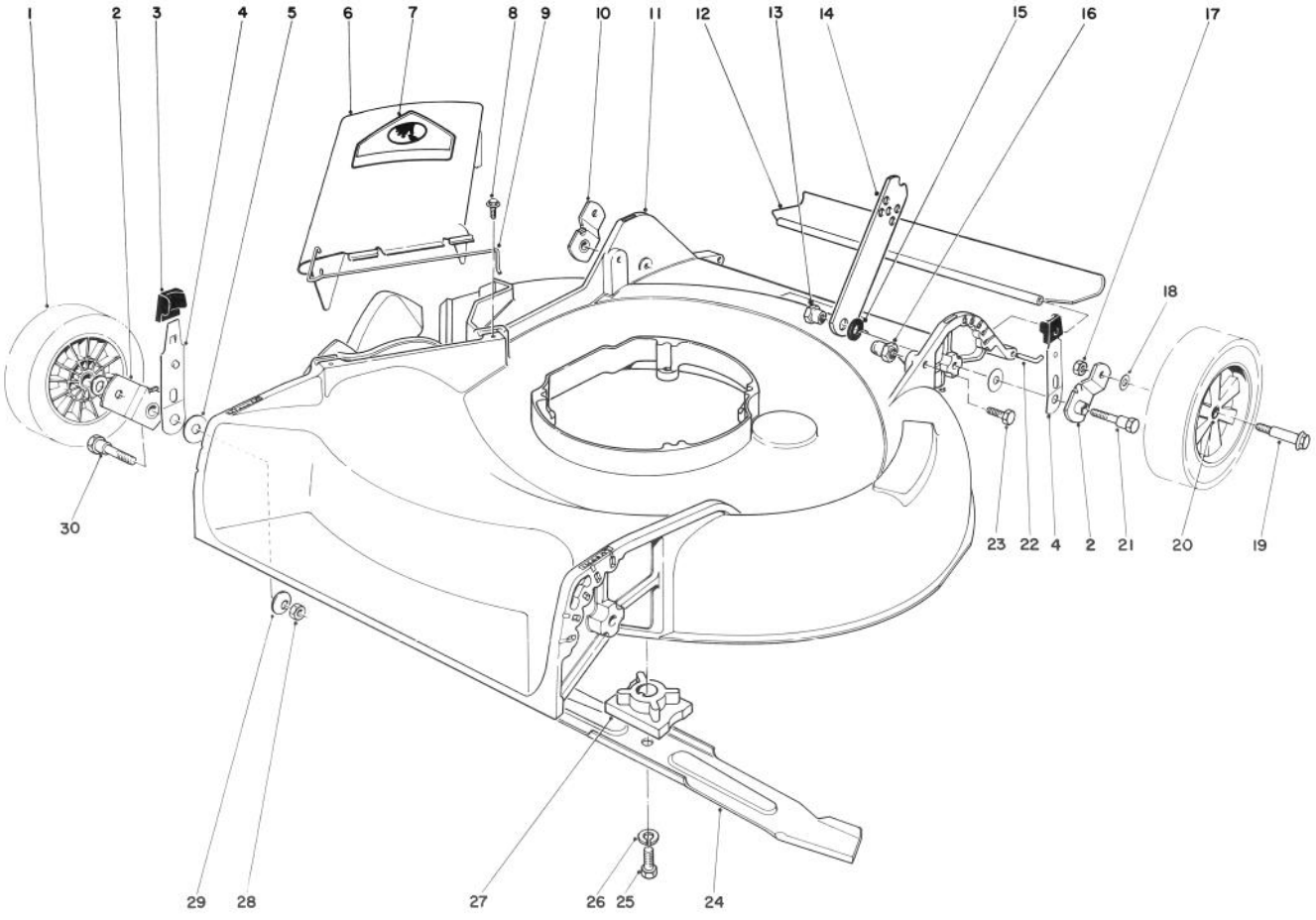

HOUSING ASSEMBLY

Ref. No.	Part No.	Description	No. Used
1	27-6200	Wheel & Tire Assembly (Incl. Ref. #20)	4
2	20-2140	Pivot Arm "A"	2
3	25-7740	Knob — Spring Arm	4
4	25-8000	Spring Arm	4
5	5-4460	Washer — Pivot	4
6	27-7817	Deflector Assembly (Incl. Ref. #7 & 9)	1
7	39-5770	Decal — Danger	1
8	46-6811	Screw & Washer Assembly	2
9	20-2640	Hinge — Spring	1
10	20-2130	Pivot Arm "B"	2
11	11-4589	Housing	1
12	22-4950	Shield — Rear	1
13	27-6520	Nut — Shoulder	2
14	27-7080	Latch — Handle	2
15	3-3287	Spacer — Handle Latch	2

Ref. No.	Part No.	Description	No. Used
16	12-2080	Nut — Shoulder	2
17	52-3620	Nut — Lock	4
18	40-1940	Washer — Wheel Bolt	4
19	27-6230	Bolt — Wheel	4
20	27-6250	Bushing — Wheel	8
21	28-8880	Screw — Pivot	2
22	33-3201	Rod — Rear Shield	1
23	322-6	Screw — Cap Hex Hd.	2
24	20-2720	Blade	1
25	26-0671	Screw — Blade	1
26	3253-22	Washer — Lock	1
27	49-7900	Retainer — Blade	1
28	3296-29	Nut — Lock	2
29	3290-456	Washer	2
30	3-0655	Screw — Pivot	2
*	13-1579	Loose Parts	1

* Not illustrated

©The Toro Company — 1988

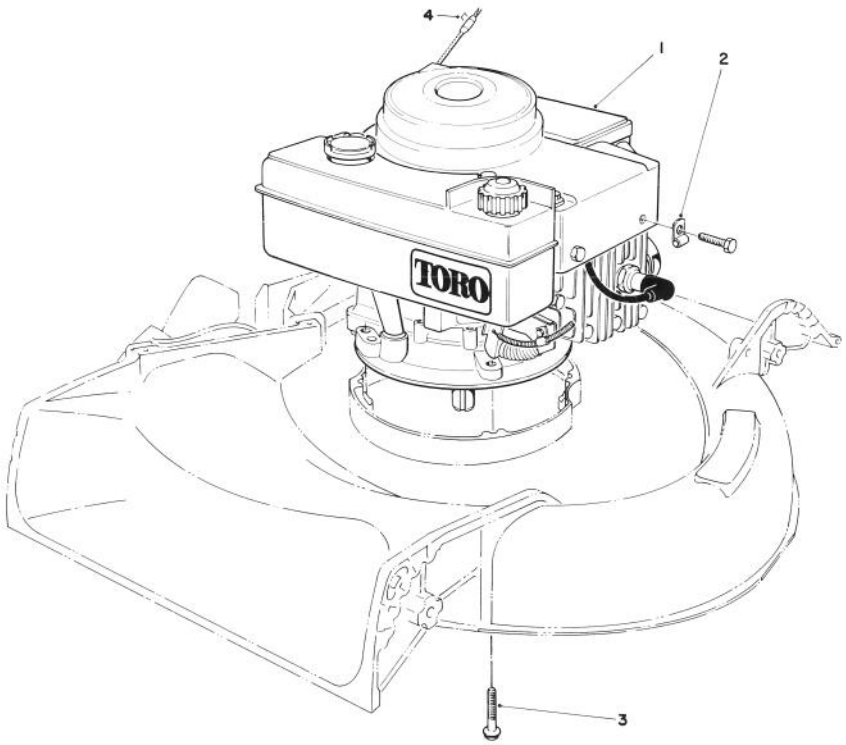

ENGINE ASSEMBLY

Ref. No.	Part No.	Description	No. Used
1		Engine	1
2	2412-63	Clamp — Casing	1

Ref. No.	Part No.	Description	No. Used
3	11-0580	Screw — Engine	3
4†		Staple	1

† Obtain Locally

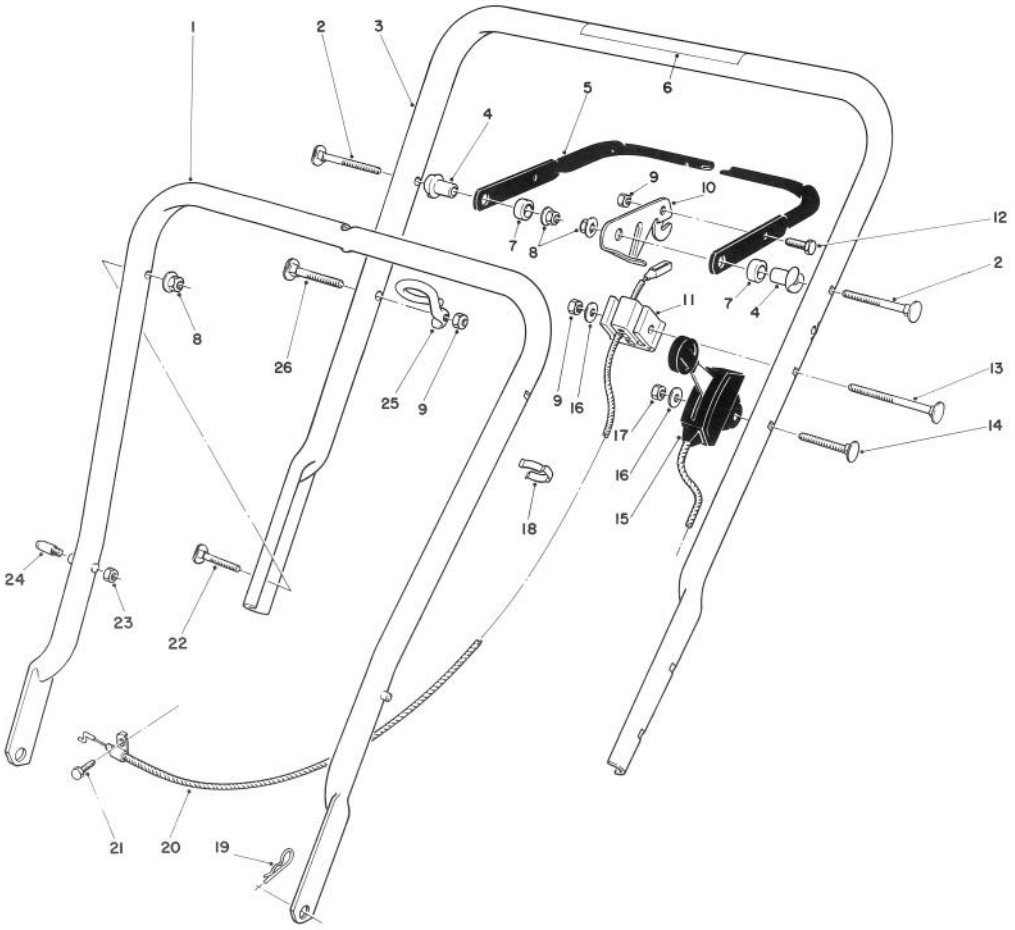

HANDLE ASSEMBLY

Ref. No.	Part No.	Description	No. Used
1	49-1690	Lower Handle Assembly	1
2	17-9421	Screw — Handle	2
3	12-4419	Handle — Upper (Incl. Ref. #6)	1
4	49-1630	Support — Spacer	2
5	62-3810	Bar — Control	1
6	52-7510	Decal — Warning	1
7	256-276	Spacer — Nylon	2
8	3296-58	Nut — Flange Lock	4
9	3296-42	Nut — Lock	3
10	66-5350	Lever — Control	1
11	46-6980	Support — Cable	1
12	321-3	Capscrew	1
13	46-6434	Screw — Handle	1
14	46-6430	Screw — Handle	1

Ref. No.	Part No.	Description	No. Used
15	46-6000	Control — Throttle (Bend Type #1) (Sheath Lg. 30") (Wire Lg. 1-3/4")	1
16	3256-22	Washer — Flat	2
17	3296-56	Nut — Lock	1
18	218-465	Clip — Cable (Double)	1
19	3290-255	Pin — Cotter Hair	2
20	46-8010	Cable — Brake	1
21	2210-250	Capscrew	1
22	17-9424	Screw — Handle	2
†23	3296-47	Nut — Lock	2
†24	49-2750	Pin — Handle	2
25	46-8080	Guide — Rope	1
26	46-6433	Screw — Handle	1

† Service Replacement Part

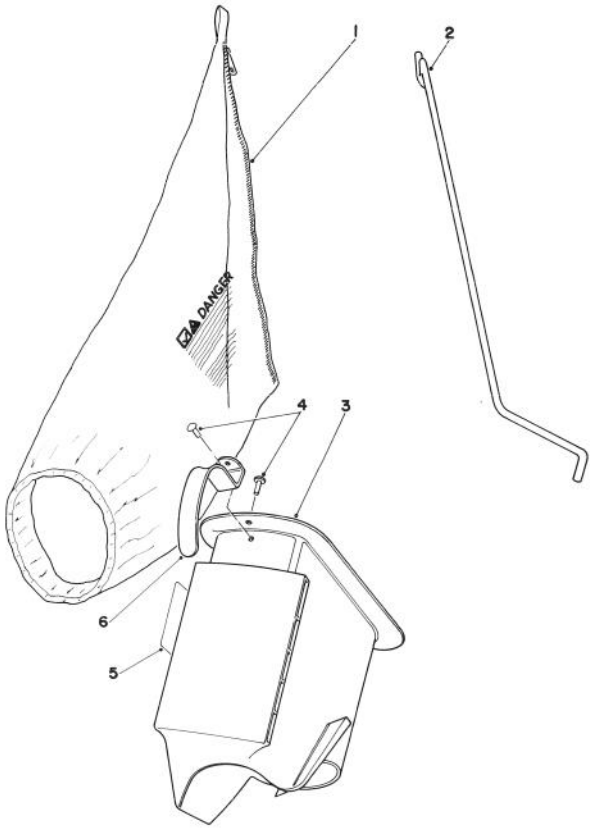

BAGGING KIT NO. 47-6510 (Optional)

Ref. No.	Part No.	Description	No. Used
1	6-0929	Grass Bag	1
2	47-5830	Bag Rod	1
3	6-1089	Grass Chute (Incl. Ref. #4 & 6)	1

Ref. No.	Part No.	Description	No. Used
4	3295-26	Rivet	2
5	36-5230	Decal — Bag Chute	1
6	20-4650	Handle Chute	1

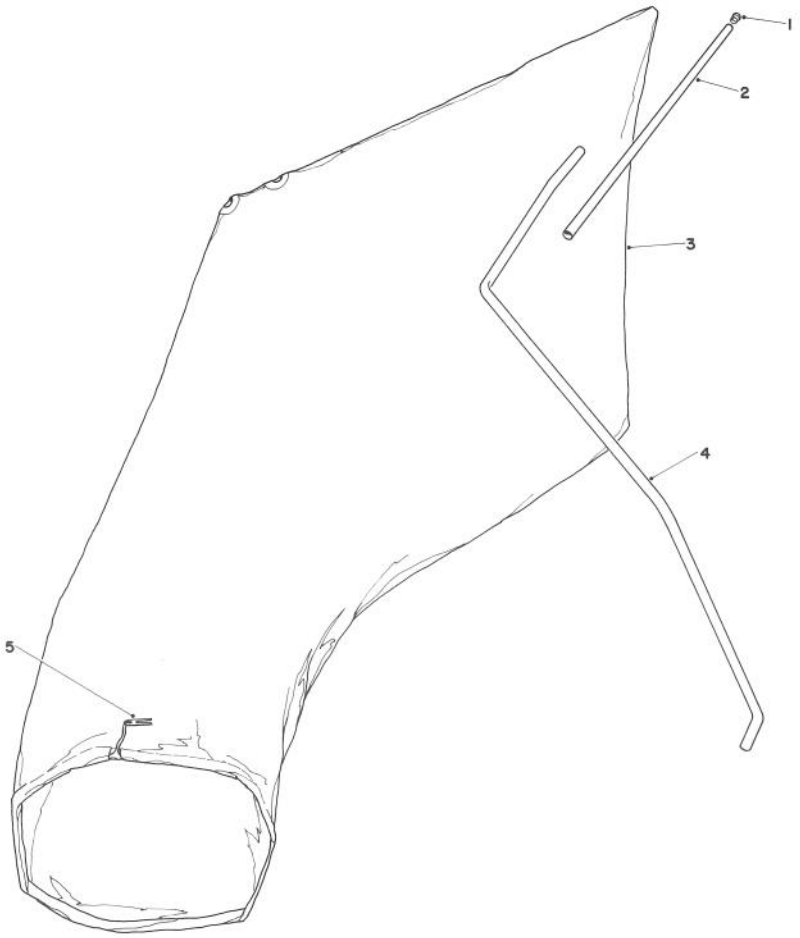

GIANT BAGGING KIT NO. 29-9750 (Optional)

Ref. No.	Part No.	Description	No. Used
1	2410-29	Cap	1
2	29-7000	Tube 25"	1
3	8-4719	Bag (Incl. Ref. #5)	1

Ref. No.	Part No.	Description	No. Used
4	22-4820	Hanger Rod	1
5	3-2781	Bag Cord Fasteners	1

ENGINE TECUMSEH MODEL NO. TVS100-44012B

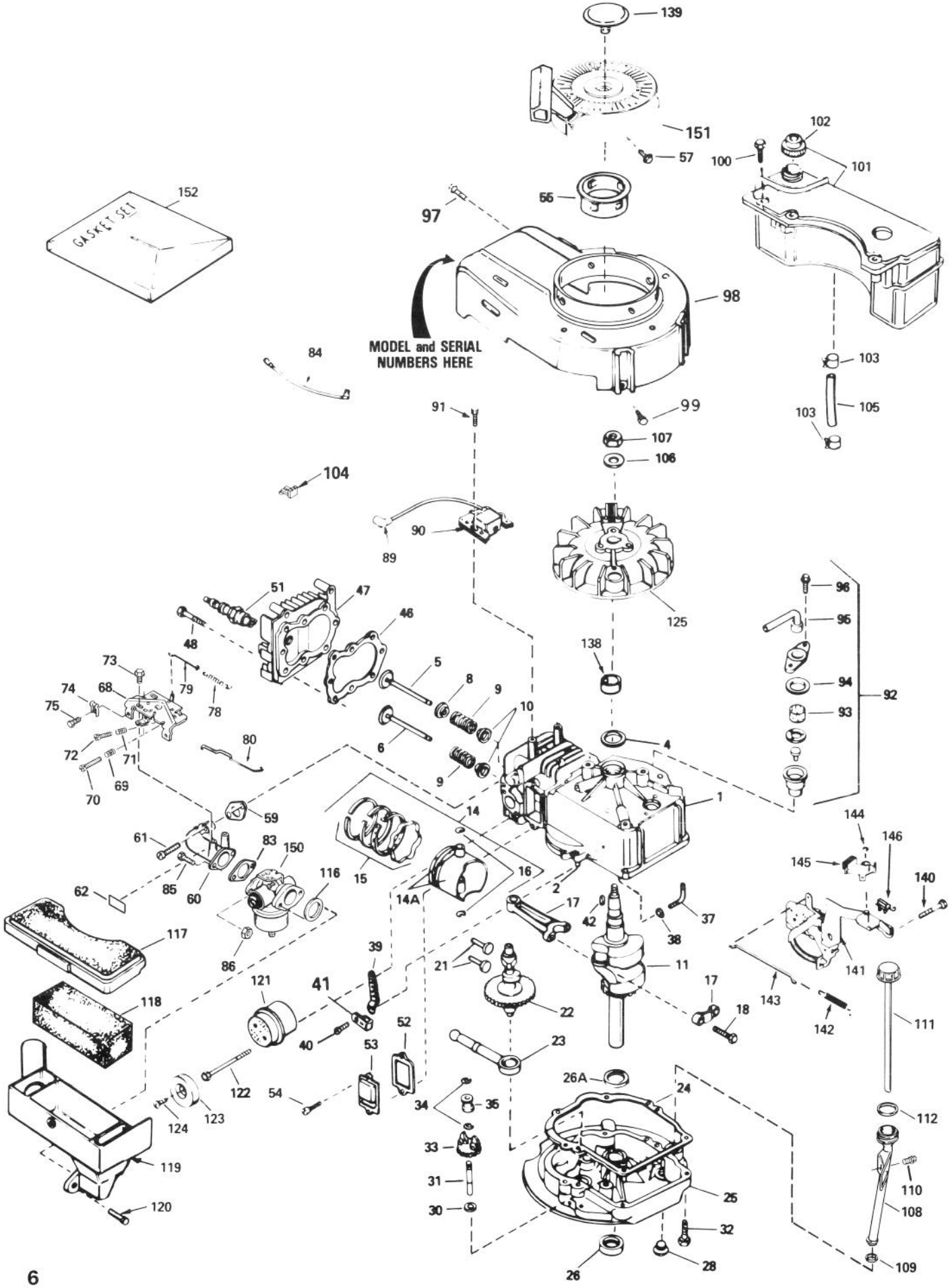

ENGINE TECUMSEH MODEL NO. TVS100-44012B

Ref. No.	Part No.	Description	No. Used
1	35010	Cylinder Assembly (Incl. Ref. #2 & 4)	1
2	26727	Pin — Dowel	2
4	32600	Seal — Oil	1
5	29314B	Valve — Intake (Std.) (Incl. Ref. #10)	1
5	29315C	Valve — Intake (1/32" oversize) (Incl. Ref. #10)	1
6	29313C	Valve — Exhaust (Std.) (Incl. Ref. #10)	1
6	29315C	Valve — Exhaust (1/32" oversize) (Incl. Ref. #10)	1
8	35390	Seal Assembly — Intake Valve	1
9	31672	Spring — Valve	2
10	31673	Cap — Lower Valve Spring	2
11	35482	Crankshaft	1
14	35544	Piston — Pin & Ring Assy. (Std.) (Incl. Ref. #14A, 15 & 16)	1
14	35545	Piston — Pin & Ring Assembly (.010 oversize) (Incl. Ref. #14A, 15 & 16)	1
14	35546	Piston — Pin & Ring Assembly (.020 oversize) (Incl. Ref. #14A, 15 & 16)	1
14A	35541	Piston & Pin Assembly (Std.) (Incl. Ref. #16)	1
14A	35542	Piston & Pin Assembly (.010 oversize) (Incl. Ref. #16)	1
14A	35543	Piston & Pin Assembly (.020 oversize) (Incl. Ref. #16)	1
15	35547	Ring Set — Piston (Std.)	1
15	35548	Ring Set — Piston (.010 oversize)	1
15	35549	Ring Set — Piston (.020 oversize)	1
16	20381	Ring — Piston Pin Retaining	2
17	30963B	Rod Assembly — Connecting (Incl. Ref. #18)	1
18	32610A	Screw — Connecting Rod	2
21	27241	Lifter — Valve	2
22	33553	Camshaft (Mechanical Compression Release)	1
23	29914	Pump Assembly — Oil	1
24	*35261	Gasket — Mounting Flange	1
25	34311B	Flange Assembly — Mounting (Incl. Ref. #26, 28 & 31)	1
26	27897	Seal — Oil	1
26A	32323	Washer — Thrust	1
28	27244	Plug — Oil Drain	1
30	30590A	Washer — Flat	1
31	30574	Shaft — Mechanical Governor	1
32	650488	Screw — Hex Hd.	6
33	30591	Gear Assembly — Governor (Incl. Ref. #30)	1

Ref. No.	Part No.	Description	No. Used
34	29193	Ring — Retaining	2
35	30588A	Spool — Governor	1
37	30589	Rod — Governor (Incl. Ref. #38)	1
38	28277	Washer — Flat	1
39	31383A	Lever — Governor	1
40	650548	Screw — Hex Washer Hd.	1
41	31335	Clamp — Governor Lever	1
42	611004	Key — Flywheel (Solid State)	1
46	*33015	Gasket — Cylinder Head	1
47	34342	Head — Cylinder	1
48	6021A	Screw — Hex Flange Hd.	8
51	35395	Plug — Spark (Champion RJ-19LM or equivalent)	1
52	*27234	Gasket — Breather	1
53	32755	Cover — Valve Spring	1
54	650128	Screw — Fil. Hd.	2
55	35000	Hub — Starter	1
57	650884	Screw — Hex Washer Hd.	2
59	*34690	Gasket — Intake Pipe	1
60	31384A	Pipe — Intake (Incl. Ref. #59)	1
61	650451	Screw — Hex Hd.	2
62	34144	Decal — Primer	1
68	33131A	Control Assy. — Remote Speed (Incl. Ref. #69 thru 72)	1
69	33802	Spring — Compression	1
70	650777	Screw — Fil. Hd.	1
71	31342	Spring — Compression	1
72	650549	Screw — Fil. Hd.	1
73	30200	Screw — Hex Washer Hd. Self-Tap.	2
74	27793	Clip — Conduit	1
75	28942	Screw — Hex Washer Hd.	1
78	31361	Spring — Governor	1
79	34337	Link — Governor Spring	1
80	34336	Link — Governor-to-Throttle	1
83	*26756	Gasket — Carburetor	1
84	34961	Wire — Ground	1
85	6201	Screw — Hex Hd.	2
86	29752	Nut & Lockwasher	2
89	610118	Cover — Spark Plug	1
90	34443A	Solid State Assembly	1
91	650814	Screw — Hex Hd.	2
92	34214A	Breather Assembly (Incl. Ref. #93 thru 96)	1
93	33734	Element — Breather	1
94	*33735	Gasket — Breather	1
95	33886	Tube — Breather	1
96	30200	Screw — Hex Washer Hd. Self-Tap	2
97	30200	Screw — Hex Washer Hd. Self-Tap	2
98	35484	Housing — Blower	1
99	650831	Screw — Hex Washer Hd. Power Lok Thread	2

* Indicates parts included in Gasket Set, Ref. #152.

ENGINE TECUMSEH MODEL NO. TVS100-44012B (Continued)

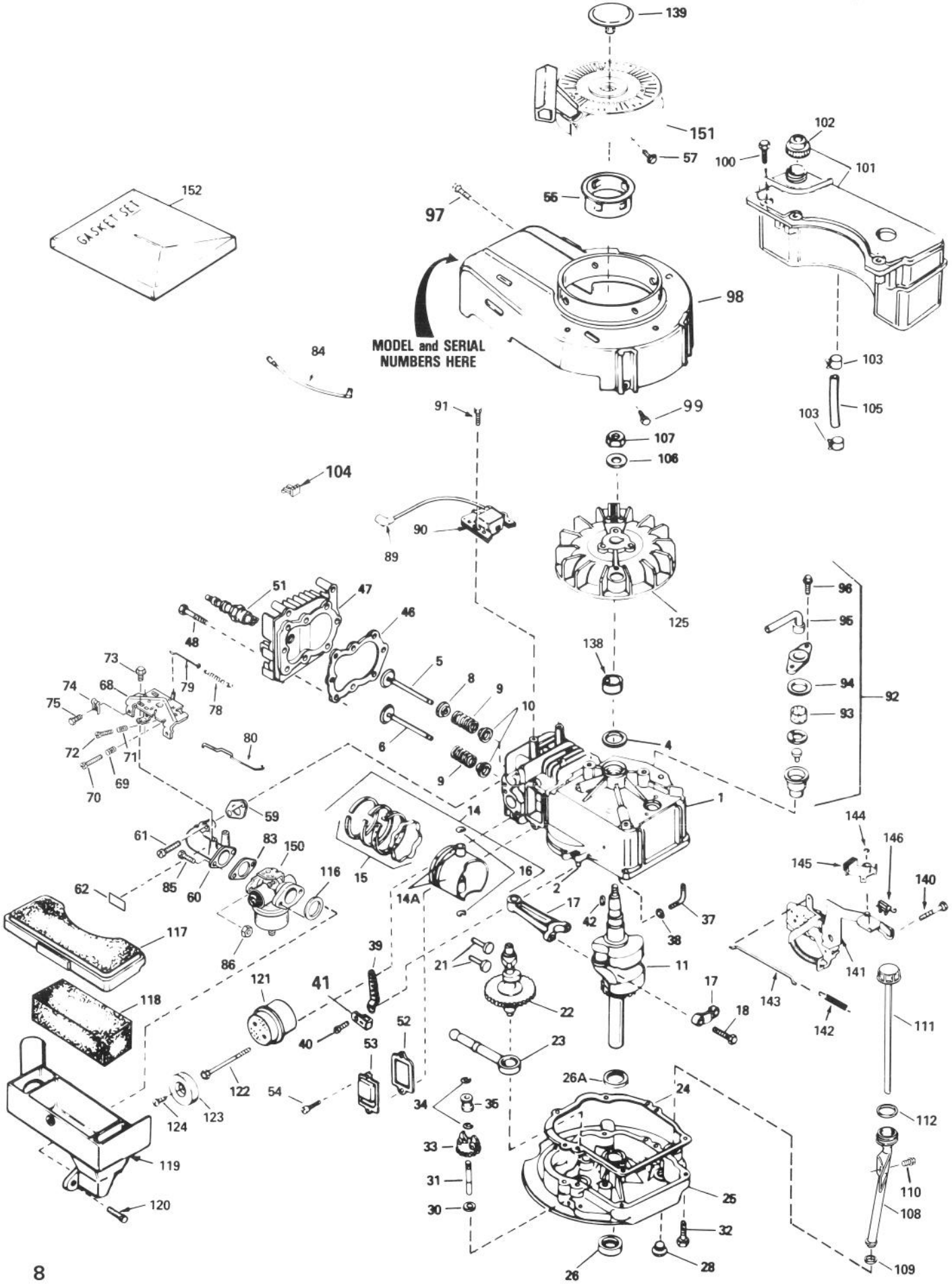

ENGINE TECUMSEH MODEL NO. TVS100-44012B (Continued)

Ref. No.	Part No.	Description	No. Used
100	28763	Screw — Hex Washer Hd.	3
101	34476	Tank Assembly — Fuel (Incl. Ref. #102)	1
102	33032	Cap — Fuel Tank	1
103	26460	Clamp — Fuel Line	2
104	29443	Clip — Fuel Line	1
105	30705	Line — Fuel	1
106	650815	Washer — Belleville	1
107	650816	Nut — Flywheel	1
108	35577	Tube — Oil Fill	1
109	34265	Gasket — Oil Fill Tube	1
110	650562	Screw — Hex Washer Hd.	1
111	35578	Dipstick — Oil	1
112	35499	"O" Ring	1
116	*34338	Gasket — Air Cleaner	1
117	34341A	Cover — Air Cleaner	1
118	34340	Element — Air Cleaner	1
119	34858	Body — Air Cleaner	1
120	650806	Screw — Hex Washer Hd. Shoulder	2

Ref. No.	Part No.	Description	No. Used
121	27181B	Muffler (Incl. Ref. #122)	1
122	650795	Screw — Hex Hd.	2
123	32431	Cover — Muffler	1
124	650760	Screw — Pan Hd.	1
125	611046A	Flywheel	1
138	34080	Spacer — Flywheel Key	1
139	35392	Plug — Starter	1
140	650839	Screw — Hex Hd. Self-Tap	2
141	35015A	Bracket Assembly — Brake	1
142	34965	Spring — Extension	1
143	34966	Link — Control	1
144	32309	Ring — Retaining	1
145	34968	Lever — Brake	1
146	610973	Terminal Assembly	1
150	632098	Carburetor (Inc. Ref. #83)	1
151	590621	Starter — Rewind	1
152	33238C	Gasket Set (Incl. Items Marked *)	1

* Indicates parts included in Gasket Set, Ref. #152.

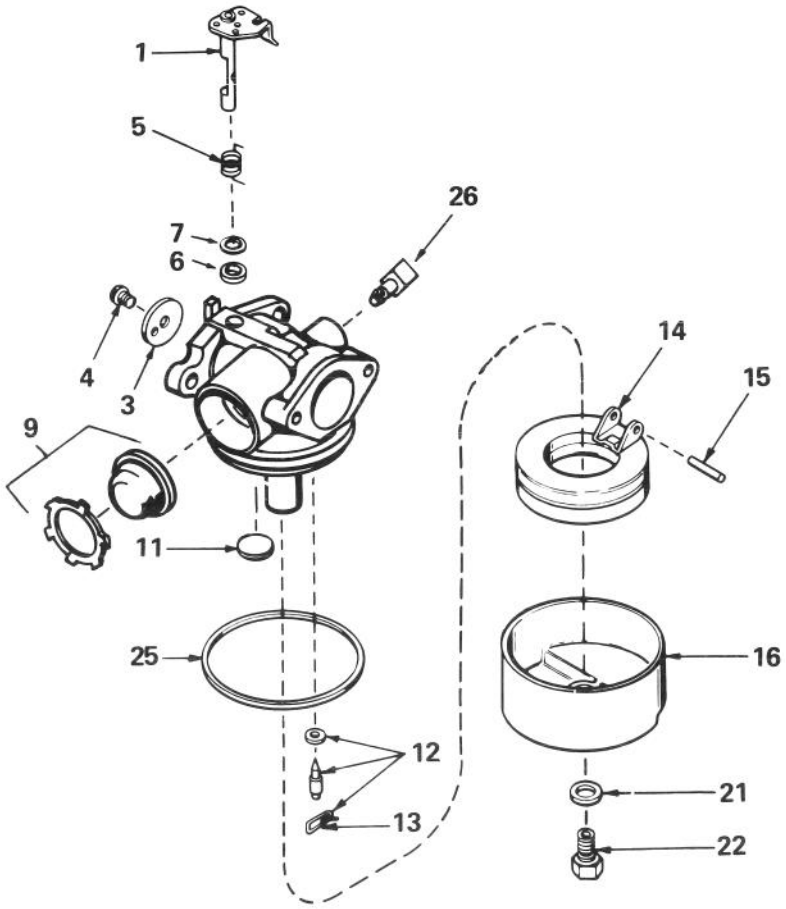

CARBURETOR NO. 632098

Ref. No.	Part No.	Description	No. Used
1	631615	Shaft & Lever Assy. — Throttle	1
3	631616	Shutter — Throttle	1
4	650506	Screw — Throttle Shutter	1
5	631767	Spring — Throttle Return	1
6	631971	Seal — Dust	1
7	631184	Washer — Flat	1
9	632047	Primer Assembly	1
11	631027	Plug — Welch	1
12	631021	Inlet Needle — Seat & Clip Assy. (Incl. Ref. #13)	1

Ref. No.	Part No.	Description	No. Used
13	631022	Clip — Inlet Needle	1
14	632019	Float — Carburetor	1
15	631024	Shaft — Float	1
16	631700	Bowl — Float	1
21	631334	Gasket — Bowl-To-Body	1
22	631937	Nut — Float Bowl	1
25	631028	Gasket — Bowl-To-Body	1
26	631807	Fitting — Fuel Inlet	1

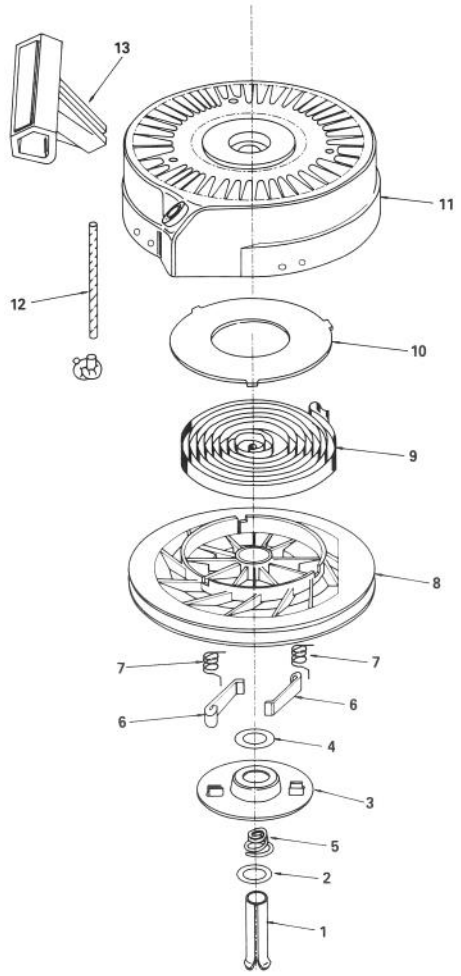

REWIND STARTER NO. 590621

Ref. No.	Part No.	Description	No. Used
1	590599A	Pin — Spring (Incl. Ref. #4)	1
2	590600	Washer	1
3	590615	Retainer	1
4	590601	Washer	1
5	590598	Spring — Brake	1
6	590616	Dog — Starter	2
7	590617	Spring — Dog	2

Ref. No.	Part No.	Description	No. Used
8	590618	Pulley	1
9	590619	Spring — Rewind	1
10	590620	Cover — Spring	1
11	590622	Housing Assembly — Starter	1
12	590535	Rope — Starter (Length 98" & 9/64" dia.)	1
13	590452	Handle — Starter	1

PRODUCT CHANGES

In an effort to make improvements available to TORO owners as quickly as possible, minor changes are incorporated into Toro's products from time to time that do not become immediately shown in the Parts Catalog. If such a change apparently has been made in your unit, which is not reflected in your manual, see your TORO Distributor or his Authorized TORO Service Dealer for information and part numbers.

IDENTIFICATION AND ORDERING

MODEL AND SERIAL NUMBERS

The Mower has two identification numbers: a model number and a serial number. The two numbers are stamped on a decal which is located on the mower housing between the rear wheels. In any correspondence concerning the mower, supply model and serial numbers to assure that correct information and replacement parts are obtained.

To order replacement parts from an Authorized TORO Service Dealer, supply the following information:

1. Model and serial numbers of the mower.
2. Part number, description, and quantity of part(s) desired.

Note: Do not order by reference number if a parts catalog is being used; use the PART NUMBER.

The Toro Promise

A Two Year Limited Warranty

On All

Gasoline Powered Consumer Products

The Toro Company promises to repair your TORO Product if defective in materials or workmanship. The following time periods from the date of purchase apply:

Residential Product ..... 2 Years
Residential Products Used Commercially ..... 45 Days

The costs of parts and labor are included, but the customer pays the transportation costs. Just return any residential product to an Authorized TORO Service Dealer or TORO Distributor.

Should you feel your TORO Product is defective and wish to rely on The Toro Promise, the following procedure is recommended:

1. Contact any Authorized TORO Service Dealer, TORO Master Service Dealer, or TORO Distributor (the Yellow Pages of your telephone directory is a good reference source).
2. He will either instruct you to return the product to him or recommend another Authorized TORO Service outlet which might be more convenient.
3. Bring the product along with your original sales slip, or other evidence of purchase date, to the service dealer.
4. The servicing dealer will inspect the unit, advise you whether the product is defective and, if so, make all repairs necessary to correct the defect without extra charge to you.

If for any reason you are dissatisfied with the dealer's analysis of the defect or the service performed, you may contact us.

Write:

TORO Consumer Service Department
8111 Lyndale Avenue South
Minneapolis, Minnesota 55420

The above remedy of product defects through repair by an Authorized TORO Service Dealer is the purchaser's sole remedy for any defect.

THERE IS NO OTHER EXPRESS WARRANTY. ALL IMPLIED WARRANTIES OF MERCHANTABILITY AND FITNESS FOR USE ARE LIMITED TO THE DURATION OF THE EXPRESS WARRANTY.

Some states do not allow limitations on how long an implied warranty lasts, so the above limitation may not apply to you.

This warranty applies only to parts or components which are defective and does not cover repairs necessary due to normal wear, misuse, accidents, or lack of proper maintenance. Regular, routine maintenance of the unit to keep it in proper operating condition is the responsibility of the owner.

All warranty repairs reimbursable under The Toro Promise must be performed by an Authorized TORO Service Dealer using Toro approved replacement parts.

Repairs or attempted repairs by anyone other than an Authorized TORO Service Account are not reimbursable under The Toro Promise. In addition, these unauthorized repair attempts may result in additional malfunctions, the correction of which is not covered by warranty.

THE TORO COMPANY IS NOT LIABLE FOR INDIRECT, INCIDENTAL OR CONSEQUENTIAL DAMAGES IN CONNECTION WITH THE USE OF THE PRODUCT INCLUDING ANY COST OR EXPENSE OF PROVIDING SUBSTITUTE EQUIPMENT OR SERVICE DURING PERIODS OF MALFUNCTION OR NON-USE.

Some states do not allow the exclusion or limitation of incidental or consequential damages, so the above limitation or exclusion may not apply to you.

This warranty gives you specific legal rights, and you may also have other rights which vary from state to state.

COUNTRIES OTHER THAN THE UNITED STATES OR CANADA

Customers who have purchased TORO products exported from the United States or Canada should contact their TORO Distributor (Dealer) to obtain guarantee policies for your country, province or state. If for any reason you are dissatisfied with your Distributor's service or have difficulty obtaining guarantee information, contact the TORO importer. If all other remedies fail, you may contact us at The Toro Company.

Compliance with Radio Interference Regulations Certified.
Certifie Conforme au Reglement sur le Brouillage Radioelectrique.

LTS-801034