Form No. 3353-982 Rev A

Power Max™ 6000 Snowthrower

Model No. 38595—Serial No. 260000001 and Up

Operator's Manual

Introduction

Read this information carefully to learn how to operate and maintain your product properly and to avoid injury and product damage. You are responsible for operating the product properly and safely.

You may contact Toro directly at www.Toro.com for product and accessory information, help finding a dealer, or to register your product.

Whenever you need service, genuine Toro parts, or additional information, contact an Authorized Service Dealer or Toro Customer Service and have the model and serial numbers of your product ready. Figure 1 identifies the location of the model and serial numbers on the product. Write the numbers in the space provided.

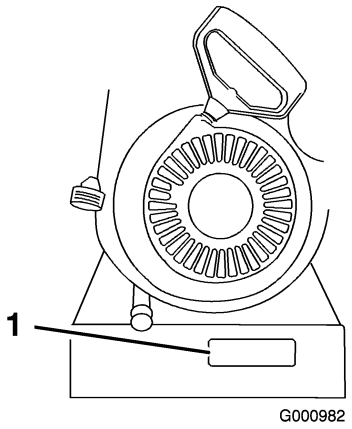

Figure 1

1. Model and serial number location

Model No. _____
Serial No. _____

This manual identifies potential hazards and has safety messages identified by the safety alert symbol (Figure 2), which signals a hazard that may cause serious injury or death if you do not follow the recommended precautions.



Figure 2

1. Safety alert symbol

This manual uses 2 other words to highlight information. **Important** calls attention to special mechanical information and **Note** emphasizes general information worthy of special attention.

Replacement Engine Owner's Manuals may be ordered through the engine manufacturer.

© 2005—The Toro® Company
8111 Lyndale Avenue South
Bloomington, MN 55420

Register at www.Toro.com.

CE

Original Instructions (EN)
Printed in the USA
All Rights Reserved

Safety

Before Operating

Read and understand the contents of this manual before operating the snowthrower. Become familiar with all controls and know how to stop the engine quickly.

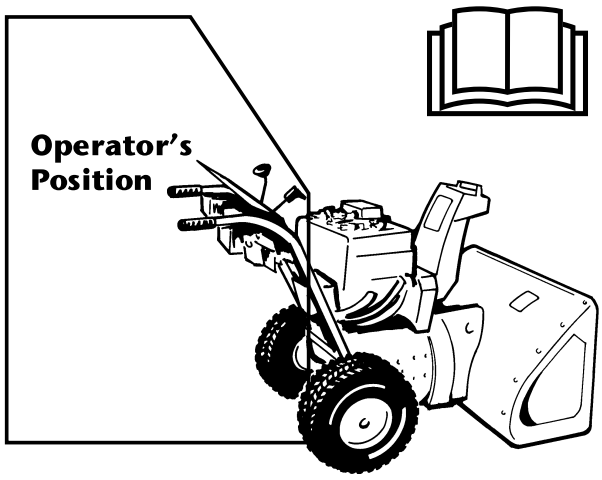

Caution: Improper use may result in loss of finger, hands, or feet.

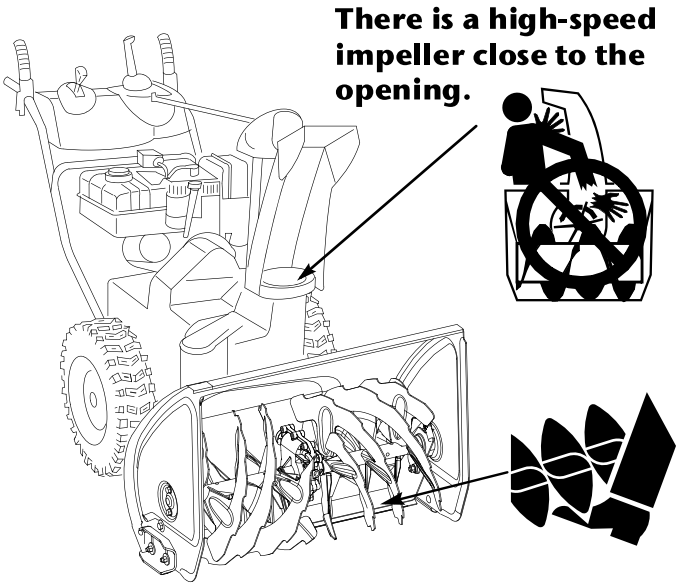

The low-speed auger has a moving pinch point close to the opening.

This snowthrower meets or exceeds the ISO standard 8437 in effect at the time of production.

Read and understand the contents of this manual before the engine is ever started.

⚠This is the safety alert symbol. It is used to alert you to potential personal injury hazards. Obey all safety messages that follow this symbol to avoid possible injury or death.

Improperly using or maintaining this snowthrower could result in injury or death. To reduce this potential, comply with the following safety instructions.

The following instructions have been adapted from the ANSI/OPEI standard B71.3-1995 and the ISO 8437:1989 standard.

Training

- Read the operator's manual carefully. Be thoroughly familiar with the controls and the proper use of the equipment. Know how to stop the unit and disengage the controls quickly.
- Never allow children to operate the snowthrower. Never allow adults to operate the snowthrower without proper instruction.
- Keep the area of operation clear of all persons (particularly small children) and pets.
- Exercise caution to avoid slipping or falling, especially when operating the snowthrower in reverse.

Preparation

- Thoroughly inspect the area where you will use the snowthrower. Remove all doormats, sleds, boards, wires, and other foreign objects.
- Before starting the engine, disengage all clutches. Shift the snowthrower into neutral as well, if applicable.
- Do not operate the snowthrower without wearing adequate winter garments. Wear footwear that will improve your footing on slippery surfaces.
- Handle fuel with care; it is highly flammable.
  - Use an approved fuel container.
  - Never add fuel to a running or hot engine.
  - Fill the fuel tank outdoors with extreme care. Never fill the fuel tank indoors.
  - Replace the fuel tank cap securely and wipe up any spilled fuel.
- Use only the power cord supplied with the snowthrower and a receptacle appropriate for use with the power cord for electric-start motors.

- Adjust the auger housing height to clear a gravel or crushed-rock surface.
- Never attempt to make any adjustments while the engine is running, except where specifically recommended by Toro.
- Let the engine and the snowthrower adjust to the outdoor temperature before starting to clear snow.
- Operating any powered machine can result in foreign objects being thrown into the eyes. Always wear safety glasses or eye shields while operating, adjusting, or repairing the snowthrower.

Operation

- Do not put your hands or feet near or under rotating parts. Keep clear of the discharge opening at all times.
- Exercise extreme caution when crossing gravel drives, walks, or roads. Stay alert for hidden hazards or traffic.
- After striking a foreign object, stop the engine, disconnect the wire from the spark plug, thoroughly inspect the snowthrower for any damage, and repair the damage before operating the snowthrower.
- If the unit should start to vibrate abnormally, stop the engine and check immediately for the cause. Vibration is generally a warning of trouble.
- Stop the engine whenever you leave the operating position, before unclogging the auger/impeller housing or discharge chute, and when making any repairs, adjustments, or inspections.
- When cleaning, repairing, or inspecting, make certain that the auger/impeller and all moving parts have stopped. Disconnect the spark plug wire and keep the wire away from the spark plug to prevent someone from accidentally starting the engine.
- Do not run the engine indoors, except when starting it and for moving the snowthrower in or out of the building. Open the outside doors; exhaust fumes are dangerous.
- Do not clear snow across the face of slopes. Exercise extreme caution when changing direction on slopes. Do not attempt to clear steep slopes.
- Never operate the snowthrower without proper guards or other safety devices in place.
- Never operate the snowthrower near glass enclosures, automobiles, window wells, and drop-offs without properly adjusting the snow discharge angle. Keep children and pets away.
- Do not overload the machine capacity by attempting to clear snow at too fast a rate.
- Look behind and use care when backing up with the snowthrower.
- Never direct the discharge at bystanders or allow anyone in front of the unit.
- Disengage the power to the auger/impeller when the snowthrower is being transported or when not in use.
- Use only attachments and accessories approved by Toro, such as wheel weights, counterweights, and cabs. (Contact an Authorized Service Dealer for accessories available for your snowthrower.)
- Never operate the snowthrower without good visibility or light. Always be sure of your footing, and keep a firm hold on the handle. Walk; never run.

Maintenance and Storage

- Check all fasteners at frequent intervals for proper tightness to be sure that the equipment is in safe working condition.
- Never store the machine with fuel in the fuel tank inside a building where ignition sources are present, such as hot water and space heaters and clothes dryers. Allow the engine to cool before storing in any enclosure.
- Always refer to this operator's manual for important details if the snowthrower is to be stored for an extended period.
- Maintain or replace safety and instruction labels when necessary.

Toro Snowthrower Safety

The following list contains safety information specific to Toro products or other safety information that you must know.

- **Rotating auger/impeller can cut off or injure fingers or hands.** Stay behind the handles and away from the discharge opening while operating the snowthrower. **Keep your face, hands, feet, and any other part of your body or clothing away from moving or rotating parts.**
- Before adjusting, cleaning, inspecting, troubleshooting, or repairing the snowthrower, **stop the engine, remove the key, and wait for all moving parts to stop. Disconnect the wire from the spark plug and keep it away from the spark plug to prevent someone from accidentally starting the engine.**
- To unclog the discharge chute, stay in the operating position and release the left hand (traction) lever. While running the auger/impeller, push down on the handles to raise the front of the snowthrower a few inches (centimeters) off the pavement. Then lift the handles quickly to bump the front of the snowthrower on the pavement. Repeat if necessary until a stream of snow comes out the discharge chute.
- If you cannot unclog the discharge chute by bumping the front of the snowthrower, **stop the engine, wait for all moving parts to stop, and use a stick; never use your hand.**

- Do not wear loose-fitting clothing that could get caught in moving parts.
- If a shield, safety device, or decal is damaged, illegible, or lost, repair or replace it before beginning operation.
- **Do not** smoke while handling gasoline.
- Do not touch the engine while it is running or soon after it has stopped because the engine may be hot enough to cause a burn.
- When storing the snowthrower for more than 30 days, drain the fuel from the fuel tank to prevent a potential hazard. Store fuel in an approved fuel container. Remove the key from the ignition switch before storing the snowthrower.
- Purchase only genuine Toro replacement parts and accessories.

Sound Pressure

This unit has a maximum sound pressure level at the operator's ear of 92 dBA, based on measurements of identical machines per EN 11201.

Sound Power

This unit has a guaranteed sound power level of 108 dBA, based on measurements of identical machines per EN 3744.

Vibration

This unit does not exceed a hand/arm vibration level of 7.0 m/s^2, based on measurements of identical machines per EN 1033.

Safety and Instructional Decals

Important: Safety and instruction decals are located near areas of potential danger. Replace damaged decals.

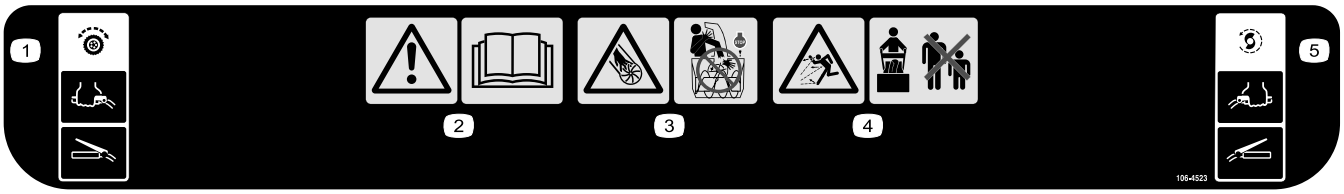

106-4523

1. Traction drive—squeeze the lever to engage; release the lever to disengage.
2. Warning—read the *Operator's Manual*.
3. Cutting/dismemberment hazard, impeller—stop the engine before leaving the operator's position and do not place your hand in the chute.
4. Thrown object hazard—keep bystanders a safe distance from the snowthrower.
5. Auger/impeller drive—squeeze the lever to engage; release the lever to disengage.

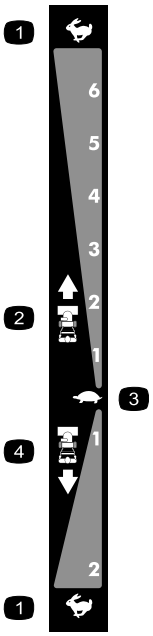

106-4525

Reorder part no. 107-3826

1. Fast
2. Forward speeds
3. Slow
4. Reverse speeds

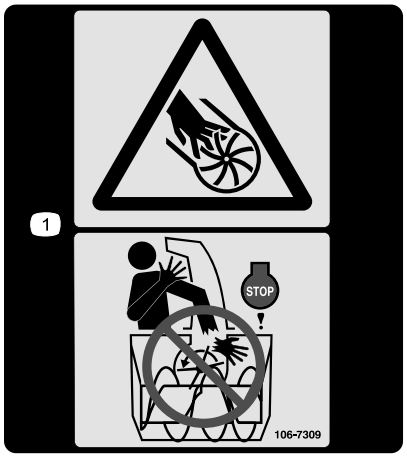

106-7309

1. Cutting/dismemberment hazard, impeller—stop the engine before leaving the operating position and do not place your hand in the chute.



107-3040

1. Cutting dismemberment, impeller and cutting dismemberment, auger hazards—keep bystanders a safe distance from the snowthrower.



1. Warning—hot surface, do not touch

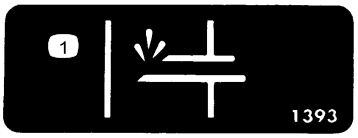

Tecumseh Part No. 36501

1. Primer

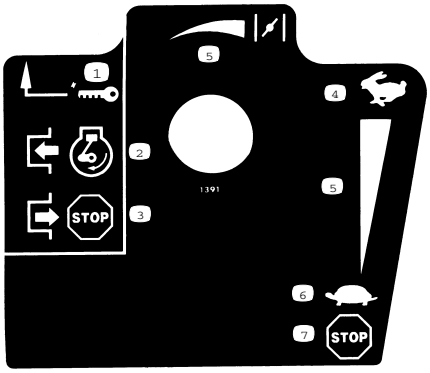

Tecumseh Part No. 35077

1. Key ignition
2. Engage to start the engine
3. Disengage to stop the engine
4. Fast
5. Increasing scale
6. Slow
7. Stop the engine

Setup

Loose Parts

Use the chart below to verify that all parts have been shipped.

Step	Description	Qty.	Use
1.	Handle bolts Curved washers Locknuts	4 4 4	Install the upper handle.
2.	No parts required	–	Install the traction control linkage.
3.	Carriage bolts Locknuts	2 2	Install the chute control rod.
4.	No parts required	–	Fill the engine with oil.
5.	No parts required	–	Check the tire pressure.
6.	No parts required	–	Check the skids and scraper.

1. Installing the Upper Handle

Note: Do not remove the rubber band until you have installed the upper handle.

1. Lift and rotate the upper handle and position it over the lower handle (Figure 3).

   Important: Route the cables attached to the Quick Stick inside the upper handle legs and ensure that the cables and the wire for the headlight are not pinched between the handle sections.

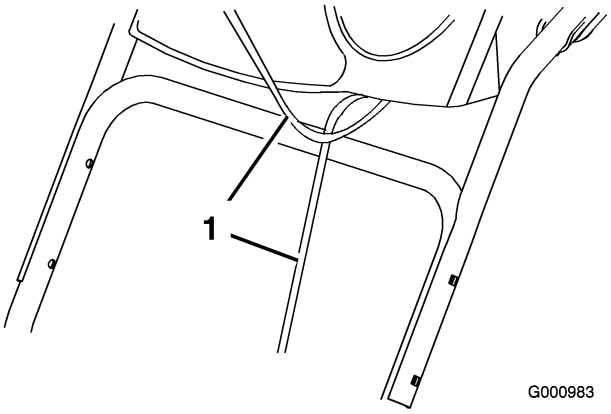

Figure 3

1. Cables

2. Secure the upper handle with 4 handle bolts, 4 curved washers, and 4 locknuts from the loose parts bag (Figure 4).

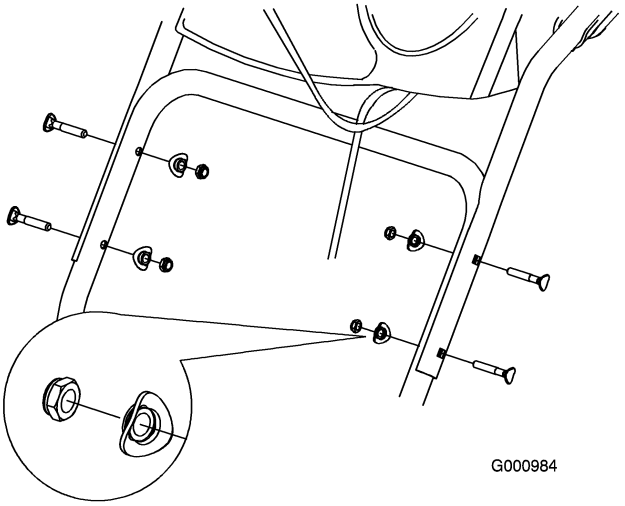

Figure 4

2. Installing the Traction Control Linkage

1. Remove the hairpin cotter and washer from the lower end of the speed control rod and insert the lower end of the rod into the lower link arm so that the bent end of the speed control rod faces rearward (Figure 5).

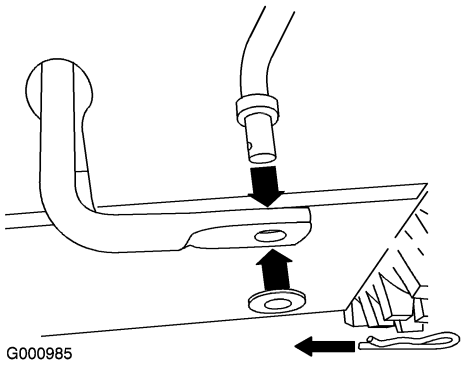

Figure 5

2. Secure the lower end of the speed control rod with the washer and hairpin cotter that you previously removed.
3. Remove the hairpin cotter and the outer washer from the trunnion on the upper end of the speed control rod (Figure 6).

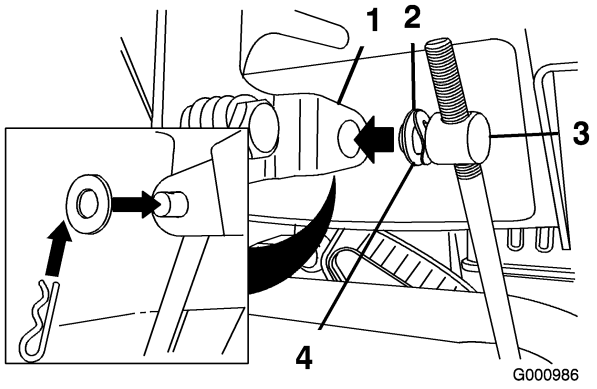

Figure 6

1. Speed selector lever
2. Wave washer
3. Trunnion
4. Flat washer

Note: To make installation easier, leave the wave washer and the flat washer on the trunnion (Figure 6).

4. Shift the speed selector lever into Position R2.
5. Rotate the lower link arm fully upward (counterclockwise) (Figure 7).

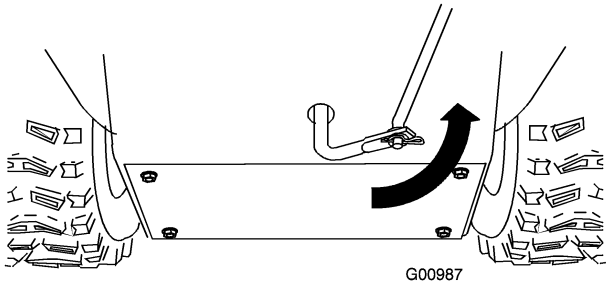

Figure 7

6. Lift up on the speed control rod and insert the trunnion into the hole in the speed selector lever (Figure 6).

Note: If the trunnion does not fit into the hole when you lift up on the speed control rod, rotate the trunnion upward or downward on the speed control rod until it fits.

7. Secure the trunnion and upper end of the speed control rod with the outer washer and a hairpin cotter you previously removed.

Note: For easier installation, look down through the opening in the speed selector (Figure 8).

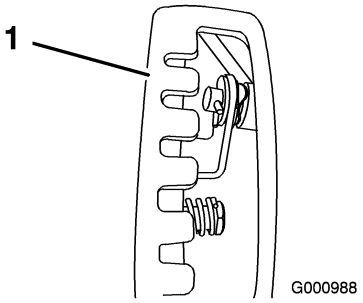

Figure 8

1. Speed selector

3. Installing the Chute Control Rod

1. Unwrap the Quick Stick and rotate it so that it is upright and in the center.
2. Hold the blue trigger cap down and pull the lever fully rearward.

Note: The discharge chute and deflector should face forward. If they do not, hold the blue trigger cap down (but do not move the Quick Stick) and rotate the discharge chute until they do.

3. Align the flattened back end of the long chute control rod with the flattened front end of the short rod that extends from the control panel so that they nest together (Figure 9).

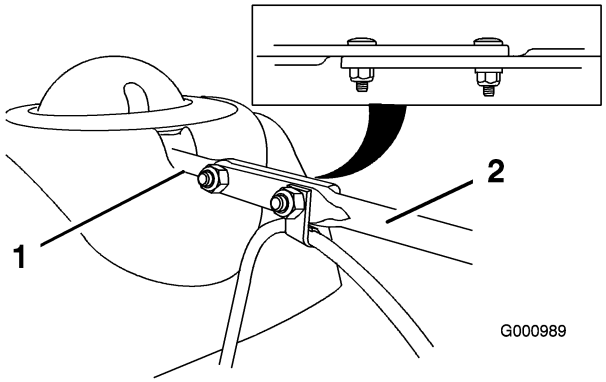

Figure 9

1. Short rod
2. Long chute control rod

4. Insert the front end of the rod into the opening in the back of the chute gear cover until it slides into the chute gear (Figure 10).

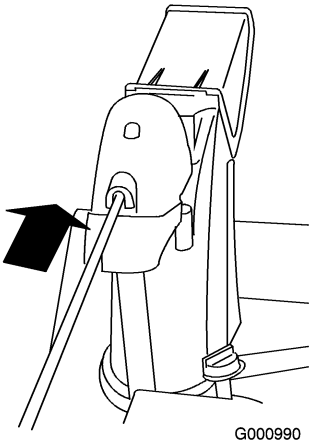

Figure 10

5. Align the holes in the nested ends of the rods and insert 2 carriage bolts (in the loose parts bag) through the short rod from the left side of the snowthrower (from the operating position).
6. Insert the cable clip that supports the deflector cable onto the forward carriage bolt, and secure the carriage bolts with locknuts from the loose parts bag (Figure 11).

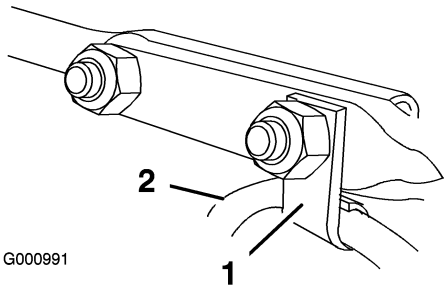

Figure 11

1. Cable clip
2. Deflector cable

7. Hold the blue trigger cap down and rotate the Quick Stick in a circle to ensure that the chute and deflector operate smoothly.

4. Filling the Engine with Oil

Your snowthrower comes with 26 oz. of oil in the engine.

Note: Before starting the engine, check the oil level and add oil if necessary.

Max. fill: 26 oz. (0.77 l), type: automotive detergent oil with an API service classification of SF, SG, SH, SJ, SL, or higher.

- For temperatures above 32°F (0°C), use SAE 30W.
- For temperatures between 0°F and 32°F (-18°C to 0°C), use SAE 5W30 or SAE 10W.
- For air temperatures below 0°F (-18°C), use SAE 0W30.

1. Remove the dipstick and **slowly** pour oil into the oil fill tube to raise the oil level to the Full mark on the dipstick. **Do not overfill** (Figure 12).

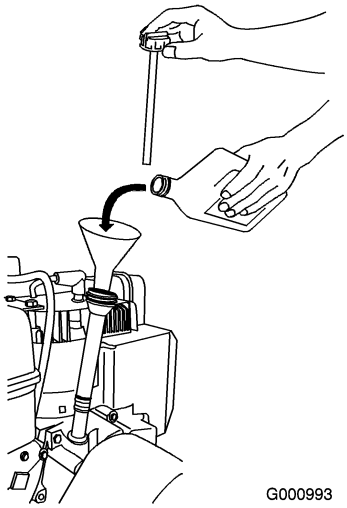

Figure 12

2. Install the dipstick securely.

Note: Do not spill oil around the oil fill tube; oil could leak onto traction parts and cause the traction to slip.

5. Checking the Tire Pressure

The tires are overinflated at the factory for shipping. Reduce the pressure equally in both tires to between 17 and 20 psi (116 and 137 kPa).

6. Checking the Skids and Scraper

Refer to Checking and Adjusting the Skids and Scraper in Maintenance.

Product Overview

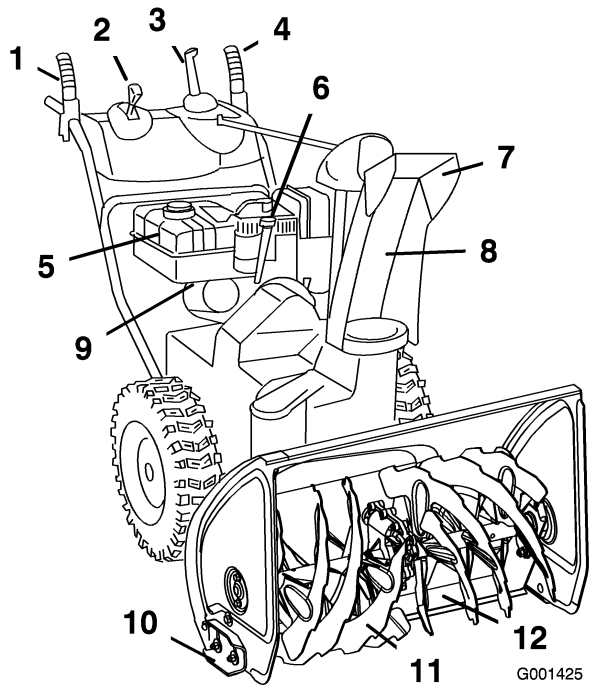

Figure 13

1. Auger/impeller lever
2. Speed selector lever
3. Quick Stick™ discharge chute control
4. Traction lever
5. Fuel tank
6. Engine oil fill tube/dipstick
7. Chute deflector
8. Discharge chute
9. Fuel shutoff valve
10. Skid (2)
11. Auger
12. Scraper

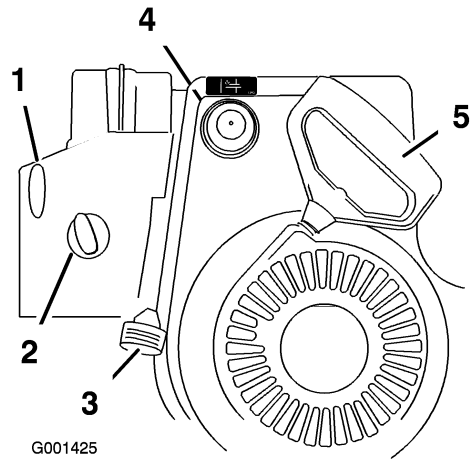

Figure 14

1. Ignition switch
2. Choke
3. Throttle
4. Primer
5. Recoil starter

Operation

Note: Determine the left and right sides of the machine from the normal operating position.

Freewheeling or Using the Self-propel Drive

You can operate the snowthrower with the self-propel feature engaged or disengaged (freewheeling).

To freewheel, slide the wheels inward and insert the axle pins through the outer axle holes, but not through the wheel hubs (Figure 15).

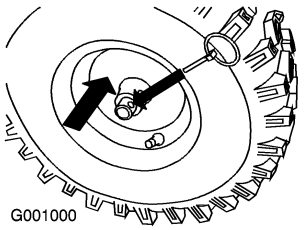

Figure 15

To self-propel, slide the wheels outward and insert the axle pins through the holes in the wheel hubs and the inner axle holes (Figure 16).

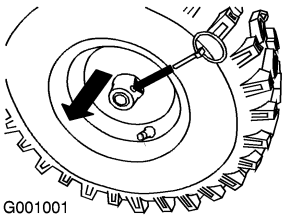

Figure 16

Filling the Fuel Tank

Gasoline is extremely flammable and explosive. A fire or explosion from gasoline can burn you and others.

- **To prevent a static charge from igniting the gasoline, place the container and/or snowthrower on the ground before filling, not in a vehicle or on an object.**
- **Fill the tank outdoors when the engine is cold. Wipe up spills.**
- **Do not handle gasoline when smoking or around an open flame or sparks.**
- **Store gasoline in an approved fuel container, out of the reach of children.**

Fill the fuel tank with fresh unleaded regular gasoline from a major name-brand service station (Figure 17).

Important: To reduce starting problems, add fuel stabilizer to the fuel all season, mixing it with gasoline less than 30 days old. Do not add oil to the gasoline.

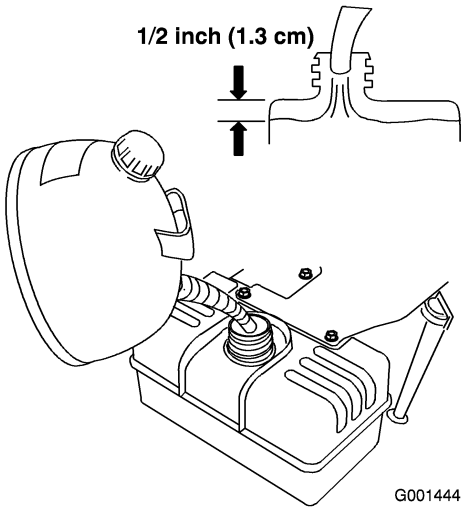

Figure 17

Starting the Engine

1. Connect the spark plug wire (Figure 18).

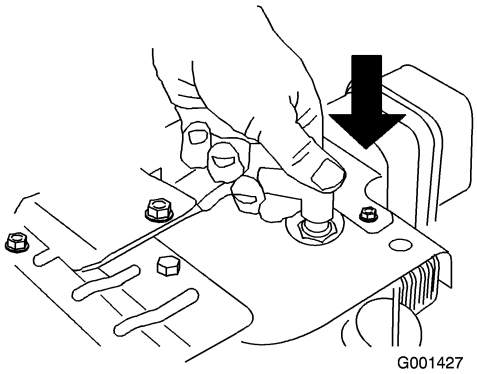

Figure 18

2. Move the throttle to the Fast position (Figure 19).

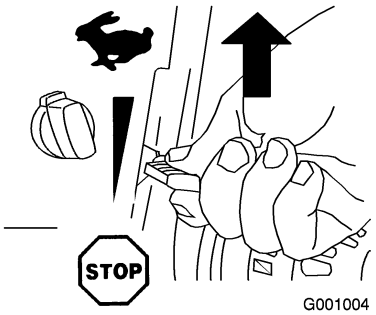

Figure 19

3. Rotate the fuel shutoff valve counterclockwise to open it (Figure 20).

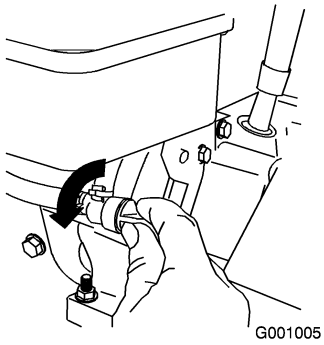

Figure 20

4. Rotate the choke to the On position (Figure 21).

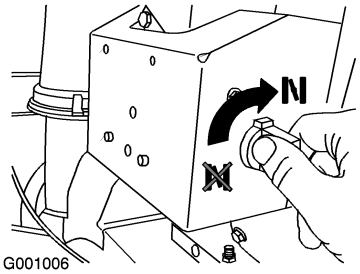

Figure 21

5. Insert the ignition key (Figure 22).

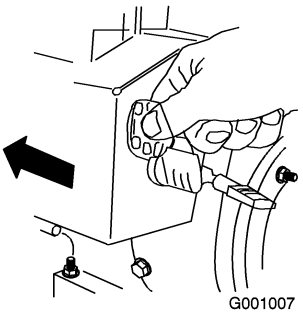

Figure 22

6. Firmly push in the primer 3 times with your thumb, holding the primer in for a second before releasing it each time (Figure 23).

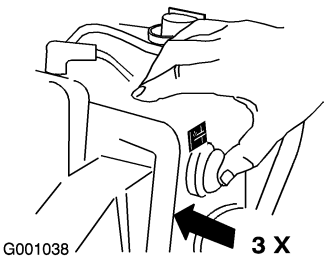

Figure 23

Note: Take your glove off when you push in the primer so that air cannot escape from the primer hole.

Note: Priming excessively may flood the engine and prevent it from starting.

7. Pull the recoil starter (Figure 24).

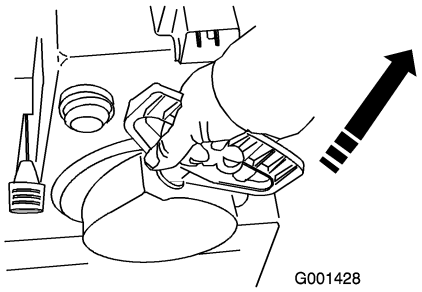

Figure 24

8. Disconnect the cord from the electric starter and the outlet.
9. When the engine starts, set the choke to the 3/4 position. As the engine warms up, set the choke to the 1/2 position. When the engine is warm, set the choke to the Off position.

Stopping the Engine

1. Move the throttle to the Stop position (Figure 25).

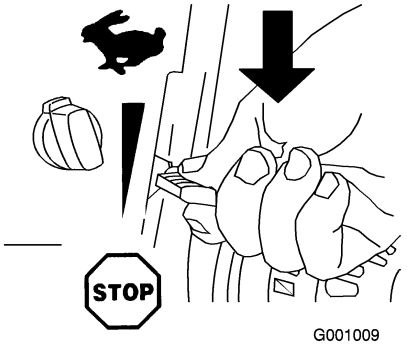

Figure 25

2. Wait for all moving parts to stop before leaving the operating position.
3. Close the fuel shutoff valve by rotating it clockwise (Figure 26).

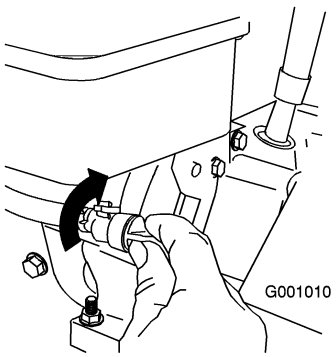

Figure 26

4. Pull the recoil starter 3 or 4 times. This helps prevent the recoil starter from freezing up.

Operating the Traction Drive

Important: To operate the traction drive, you must operate the snowthrower with the self-propel feature engaged. Refer to Freewheeling or Using the Self-propel Drive.

1. To engage the traction drive, squeeze the left hand (traction) lever to the handgrip (Figure 27).

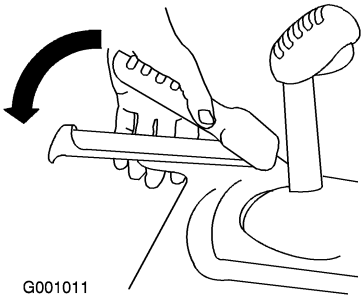

Figure 27

2. To stop the traction drive, release the traction lever.
3. Check to ensure that the speed selector operates properly:
   - If the snowthrower does not move or moves forward when it is in Position R1, remove the trunnion from the speed selector lever, turn the trunnion downward (clockwise) on the speed control rod, then install the trunnion.
   - If the snowthrower does not move or moves rearward when it is in Position 1 (forward), remove the trunnion from the speed selector lever, turn the trunnion upward (counterclockwise) on the speed control rod, then install the trunnion.

     Note: Refer to Installing the Traction Control Linkage.

     Note: If the snowthrower moves when the traction lever is in the released position, check the traction cable (refer to Checking and Adjusting the Traction Cable) or take the snowthrower to an Authorized Service Dealer for service.

Operating the Speed Selector

The speed selector has 6 forward and 2 reverse gears. To change speeds, release the traction lever and shift the speed selector lever to the desired position (Figure 28). The lever locks in a notch at each speed selection.

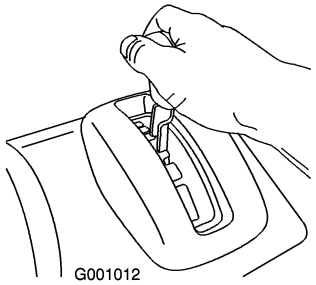

Figure 28

Operating the Auger/Impeller Drive

1. To engage the auger/ impeller drive, squeeze the right hand (auger/ impeller) lever to the handgrip (Figure 29).

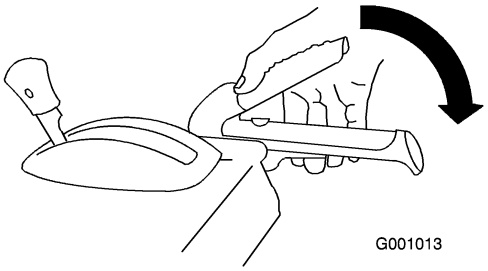

Figure 29

2. To stop the auger and impeller, release the right hand lever.

   Important: When you engage both the auger/impeller lever and the traction lever, the traction lever locks the auger/impeller lever down, freeing your right hand. To release both levers, simply release the left hand (traction) lever.

3. If the auger and impeller continue to rotate when you release the auger/impeller lever, do not operate the snowthrower. Check the auger/impeller cable (refer to Checking and Adjusting the Auger/Impeller Cable) and adjust it if necessary. Otherwise, take the snowthrower to an Authorized Dealer for service.

If the auger and impeller continue to rotate when you release the auger/impeller lever, you could seriously injure yourself or others.

Do not operate the snowthrower. Take it to an Authorized Service Dealer for service.

Operating the Quick Stick™

Hold the blue trigger cap down to use the Quick Stick to move the discharge chute and the chute deflector. Release the trigger cap to lock the discharge chute and chute deflector into position (Figure 30).

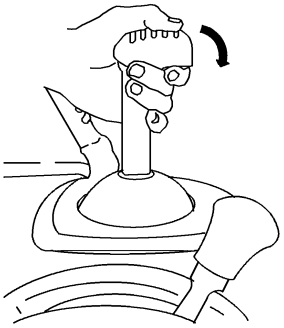

Figure 30

Moving the Discharge Chute

Hold the blue trigger cap down and move the Quick Stick to the left to move the discharge chute to the left; move the Quick Stick to the right to move the discharge chute to the right (Figure 31).

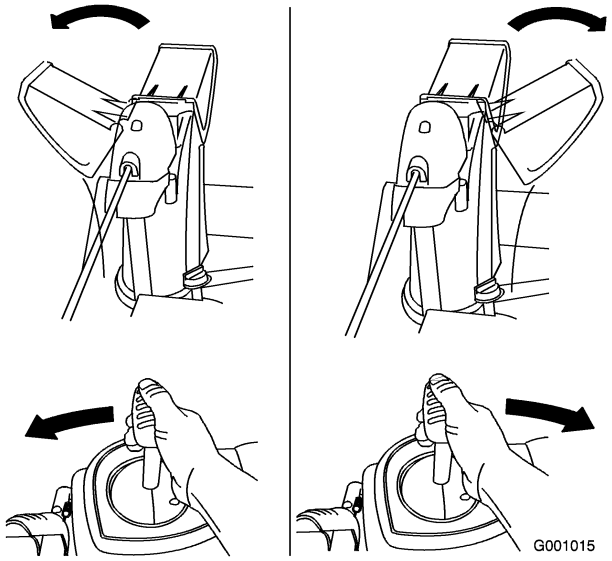

Figure 31

- If the chute does not move, refer to Adjusting the Discharge Chute Latch.
- If the chute does not turn as far to the left as it does to the right, ensure that the cable is routed to the inside of the handles. Refer to Installing the Upper Handle.
- If the chute does not lock into place when you release the trigger cap, refer to Adjusting the Discharge Chute Latch.

Moving the Chute Deflector

Hold the blue trigger cap down and move the Quick Stick forward to lower the chute deflector; move it rearward to raise the chute deflector (Figure 32).

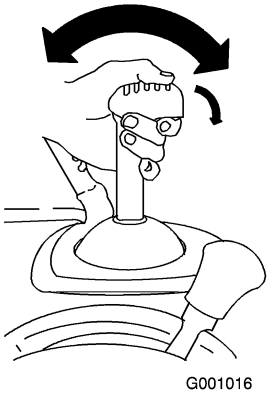

Figure 32

Unclogging the Discharge Chute

If the auger/impeller is running but there is no snow coming out of the discharge chute, the discharge chute may be clogged.

- To unclog the discharge chute, stay in the operating position and release the left hand (traction) lever. While running the auger/impeller, push down on the handles to raise the front of the snowthrower a few inches (centimeters) off the pavement. Then lift the handles quickly to bump the front of the snowthrower on the pavement. Repeat if necessary until a stream of snow comes out the discharge chute.
- If you cannot unclog the discharge chute by bumping the front of the snowthrower, **stop the engine, wait for all moving parts to stop, and use a stick; never use your hand.**

  Important: Unclogging the discharge chute by bumping the front of the snowthrower on the pavement may cause the skids to move. Adjust the skids and tighten the skid bolts securely.

Preventing Freeze-up

- In snowy and cold conditions, some controls and moving parts may freeze. **Do not use excessive force when trying to operate frozen controls.** If you have difficulty operating any control or part, start the engine and let it run for a few minutes.
- After using the snowthrower, let the engine run for a few minutes to prevent moving parts from freezing. Engage the auger/impeller to clear any remaining snow from inside the housing. Rotate the Quick Stick to prevent it from freezing. Stop the engine, wait for all moving parts to stop, and remove all ice and snow from the snowthrower.
- With the engine off, pull the recoil starter handle several times to prevent the recoil starter from freezing up.

Operating Tips

When the snowthrower is in operation, the impeller and auger can rotate and cut off or injure hands and feet.

- **Before adjusting, cleaning, inspecting, troubleshooting, or repairing the snowthrower, stop the engine and wait for all moving parts to stop. Disconnect the wire from the spark plug and keep it away from the plug to prevent someone from accidentally starting the engine.**
- **Remove an obstruction from the discharge chute; refer to Unclogging the Discharge Chute. If necessary, use a stick, not your hands, to remove an obstruction from the discharge chute.**
- **Stay behind the handles and away from the discharge opening while operating the snowthrower.**
- **Keep face, hands, feet, and any other part of your body or clothing away from concealed, moving, or rotating parts.**

The rotor blades can throw stones, toys, and other foreign objects and cause serious personal injury to the operator or to bystanders.

- **Keep the area to be cleared free of all objects that the rotor blades could pick up and throw.**
- **Keep all children and pets away from the area of operation.**

- Always set the throttle to the Fast position when throwing snow.
- If the engine slows down under a load or the wheels slip, shift the snowthrower into a lower gear.
- If the front of the snowthrower rides up, shift the snowthrower into a lower gear. If the front continues to ride up, lift up on the handles.

Maintenance

Note: Determine the left and right sides of the machine from the normal operating position.

Recommended Maintenance Schedule(s)

Maintenance Service Interval	Maintenance Procedure
After the first 2 operating hours	• Inspect the traction cable and adjust it if necessary. • Inspect the auger/impeller cable and adjust it if necessary. • Change the engine oil.
Before each use or daily	• Check the engine oil level and add oil if necessary.
Yearly	• Check the skids and the scraper and adjust them if necessary. • Inspect the traction cable and adjust or replace it if necessary. • Inspect the auger/impeller cable and adjust or replace it if necessary. • Check the auger gearbox oil and add oil if necessary. • Change the engine oil. • Lubricate the hex shaft. • Inspect the spark plug. Replace and/or gap it if necessary.
Yearly or before storage	• Check the air pressure in the tires and inflate them to 17–20 psi (116–137 kPa). • Drain the gasoline and run the engine to dry out the fuel tank and the carburetor at the end of the season. • Have an Authorized Service Dealer inspect and replace the traction drive belt and/or the auger/impeller drive belt, if necessary.

Important: **You can find more information about maintaining and servicing your snowthrower at www.Toro.com.**

Important: **Refer to your engine operator's manual for additional maintenance procedures. For engine adjustments, repairs, or warranty service not covered in this manual, contact an Authorized Tecumseh Servicing Dealer.**

Preparing for Maintenance

1. Move the snowthrower to a level surface.
2. Stop the engine and wait for all moving parts to stop.
3. Disconnect the spark plug wire (Figure 33).

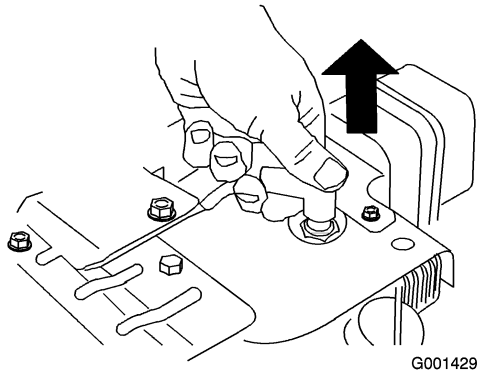

Figure 33

Checking the Engine Oil Level

Each time before using the snowthrower, check the oil level in the engine crankcase.

1. Remove the dipstick, wipe it clean, then fully install the dipstick.
2. Remove the dipstick and check the oil level (Figure 34). If the oil level is below the Add mark on the dipstick, add oil. Refer to Filling the Engine with Oil.

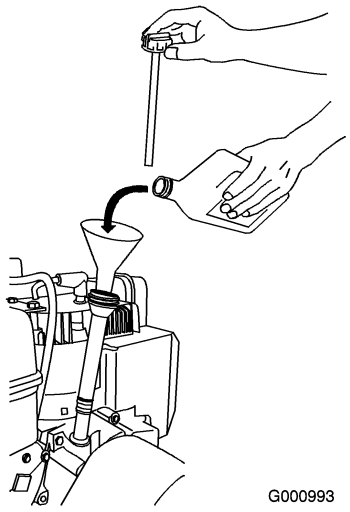

Figure 34

Checking and Adjusting the Skids and Scraper

Check the skids and the scraper to ensure that the auger does not contact the paved or gravel surface. Adjust the skids and the scraper as needed to compensate for wear.

1. Check the tire pressure. Refer to Checking the Tire Pressure.
2. Loosen the nuts that secure both skids to the auger sides until the skids slide up and down easily (Figure 35).

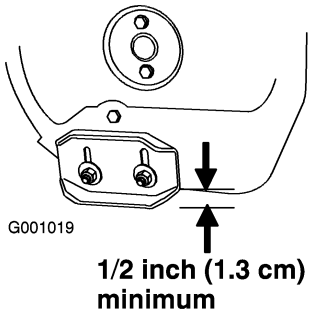

Figure 35

3. Support the side plates so that they are **at least** 1/2 inch (1.3 cm) above a level surface.

   Important: The auger blades must be supported above the ground by the skids.

4. Ensure that the scraper is 1/8 inch (3 mm) above and parallel to a level surface.

   Note: If the pavement is cracked, rough, or uneven, adjust the skids to raise the scraper. For gravel surfaces, adjust the skids further down to prevent the snowthrower from picking up rocks.

5. Move the skids down until they are even with the ground.
6. Firmly tighten the nuts that secure both skids to the auger sides.

   Note: To quickly adjust the skids if they loosen, support the scraper 1/8 inch (3 mm) off the pavement, then adjust the skids down to the pavement.

   Note: If the skids become excessively worn, you can turn them over and set the unused side toward the pavement.

Checking and Adjusting the Traction Cable

Check and adjust the traction cable after the first 2 operating hours, then yearly thereafter. If the snowthrower does not drive in the forward or reverse speeds or it drives when you release the traction lever, adjust the traction cable.

With the traction lever disengaged, check the pin in the elongated slot in the left side of the snowthrower above the tire. There should be a gap of 1/32 to 1/16 inch (1 to 1.5 mm) from the front of the slot to the front edge of the pin (Figure 36).

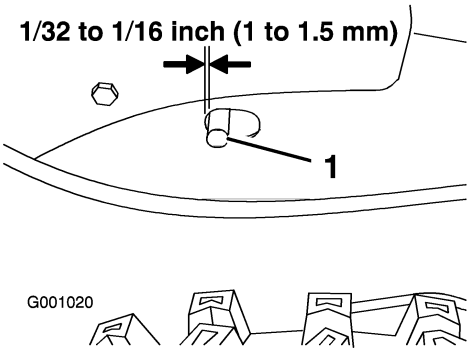

Figure 36

1. Pin

If the left hand (traction) cable is not properly adjusted, do the following steps:

1. Loosen the jam nut.
2. Loosen or tighten the turnbuckle to adjust the pin until it is the proper gap from the front edge of the slot.
3. Tighten the jam nut (Figure 37).

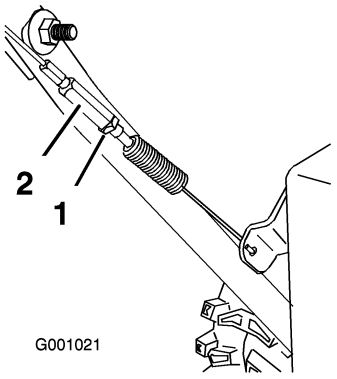

Figure 37

1. Jam nut
2. Turnbuckle

Checking and Adjusting the Auger/Impeller Cable

Check and adjust the auger/impeller cable after the first 2 operating hours, then yearly thereafter.

1. Remove the 2 screws from the right side of the belt cover as shown.
2. Lift up the right side of the belt cover (Figure 38).

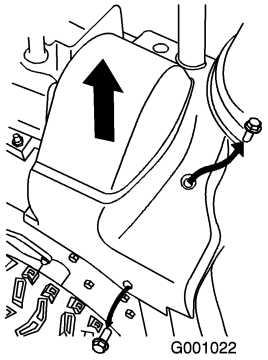

Figure 38

3. With the auger/impeller lever disengaged, ensure that the gap between the auger clutch assembly and the tab is 1/16 inch (1.5 mm) (Figure 39).

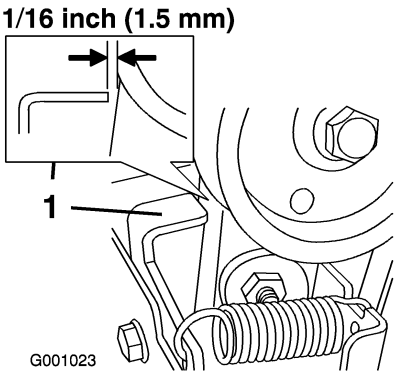

Figure 39

1. Tab

4. If the auger/impeller cable is not properly adjusted, do the following steps:
5. Loosen the jam nut (Figure 40).

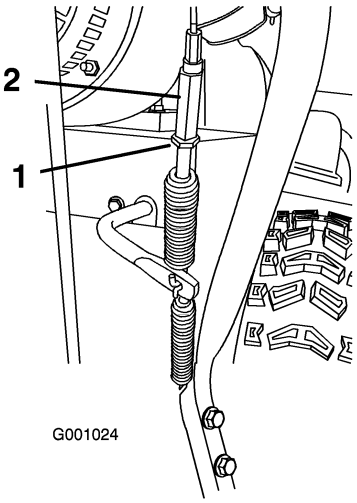

Figure 40

1. Jam nut
2. Turnbuckle

6. Loosen or tighten the turnbuckle that adjusts the tension on the cable (Figure 40).
7. Adjust the turnbuckle until you obtain the proper gap.
8. Tighten the jam nut.
9. Insert the 2 screws you previously removed on the belt cover.
10. If the auger/impeller cable is properly adjusted but a problem remains, contact an Authorized Service Dealer.

Checking the Auger Gearbox Oil Level

Check the auger gearbox oil yearly and add oil if necessary.

1. Move the snowthrower to a level surface.
2. Clean the area around the pipe plug (Figure 41).

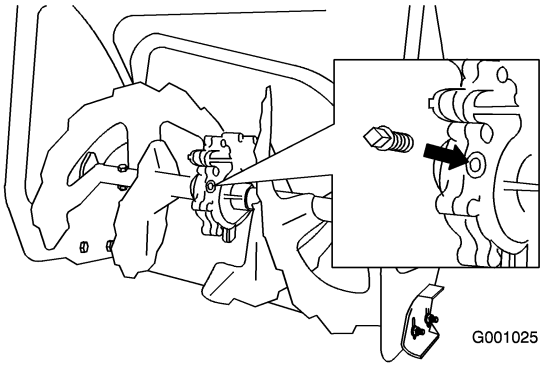

Figure 41

3. Remove the pipe plug from the gearbox.

4. Check the oil level in the gearbox. The oil should be at the point of overflowing at the filler opening.
5. If the oil level is low, add GL-5 or GL-6, SAE 85-95 EP transmission oil to the gearbox until the point of overflow.

   Note: Do not use synthetic oil.
6. Install the pipe plug in the gearbox.

Changing the Engine Oil

Change the engine oil after the first 2 operating hours, then yearly thereafter. If possible, run the engine just before changing the oil because warm oil flows better and carries more contaminants.

Max. fill: 26 oz. (0.77 l), type: automotive detergent oil with an API service classification of SF, SG, SH, SJ, SL, or higher.

- For temperatures above 32°F (0°C), use SAE 30W.
- For temperatures between 0°F and 32°F (-18°C to 0°C), use SAE 5W30 or SAE 10W.
- For air temperatures below 0°F (-18°C), use SAE 0W30.

1. Clean the area around the oil drain cap (Figure 42).

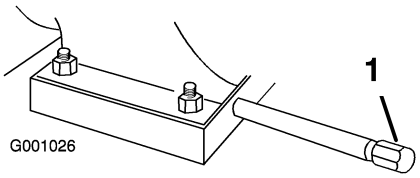

Figure 42
1. Oil drain cap

2. Slide an oil drain pan under the drain extension and remove the oil drain cap.
3. Drain the oil.

   Note: Dispose of the used oil properly at a local recycling center.
4. Install the oil drain cap.
5. Fill the crankcase with oil. Refer to Filling the Engine Crankcase with Oil.

Lubricating the Hex Shaft

Lightly lubricate the hex shaft yearly with automotive engine oil (Figure 43).

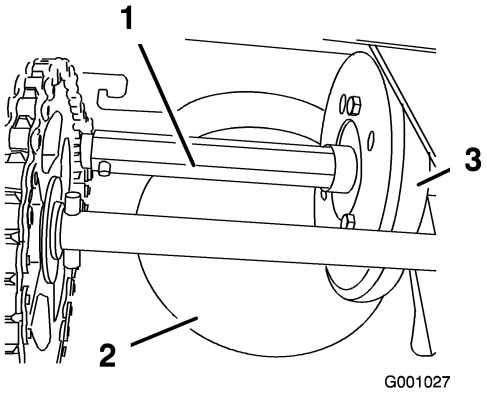

Figure 43
1. Hex shaft
2. Aluminum friction plate
3. Rubber wheel

Important: Do not get oil on the rubber wheel or the aluminum friction drive plate because the traction drive will slip (Figure 43).

1. Drain the gasoline from the fuel tank.
2. Tip the snowthrower forward onto its auger housing and block it so that it cannot fall.
3. Remove the back cover (Figure 44).

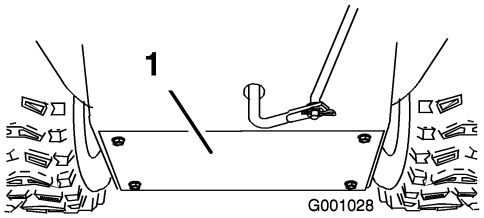

Figure 44
1. Back cover

4. Move the speed selector lever to Position R2.
5. Dip your finger in automotive engine oil and **lightly** lubricate hex shaft.
6. Move the speed selector lever to Position 6.
7. Lubricate the other end of the hex shaft.
8. Move the speed selector lever forward and rearward a few times.
9. Install the back cover and return the snowthrower to the operating position.

Inspecting and Replacing the Spark Plug

Use a **Champion RJ-19LM** or equivalent spark plug. Check and gap the spark yearly, and replace the plug if necessary.

1. Clean around the base of the spark plug.
2. Remove the spark plug.
3. Examine the spark plug and replace it if it is cracked, fouled, dirty, or if the electrodes are worn.

Important: **Do not clean the electrodes because grit could enter the cylinder and damage the engine.**

4. Set the gap between the electrodes on the spark plug at 0.030 inch (0.76 mm) (Figure 45).

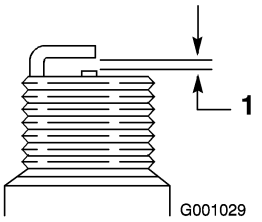

Figure 45

1. 0.030 inch (0.76 mm)

5. Install the spark plug by hand and then torque it to 15 ft-lb (20.4 N·m).

Note: If you do not have a torque wrench, tighten the plug firmly.

Adjusting the Discharge Chute Latch

If the discharge chute does not lock into the desired position or does not unlock so that you can move it to another position, adjust the discharge chute latch.

1. Remove the fastener on the gear cover (Figure 46), lift the front of the cover up, and slide it back and out of the way.

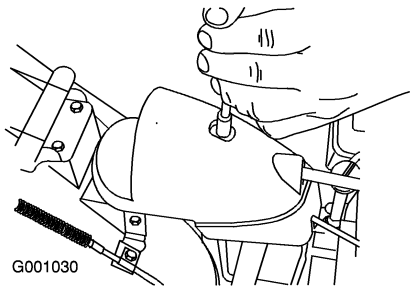

Figure 46

2. Loosen the bolt on the cable clamp (Figure 47).

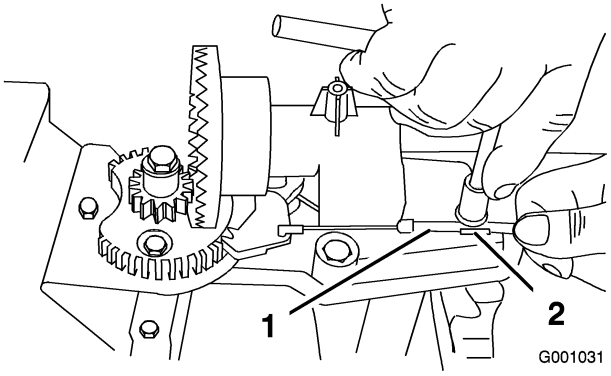

Figure 47

1. Cable conduit
2. Cable clamp

3. Grasp the cable conduit and move it toward the front of the machine until the discharge chute latch fully engages the gear teeth (Figure 47 and Figure 48).

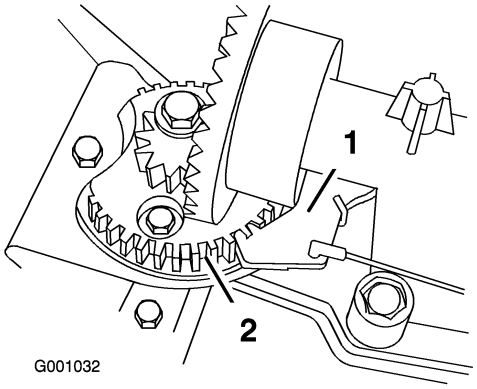

Figure 48

1. Discharge chute latch
2. Gear teeth

Note: The latch is spring loaded and will naturally move into the teeth of the gear (Figure 48).

4. Remove any slack in the cable by pulling the cable conduit rearward.
5. Tighten the bolt on the cable clamp.
6. Install and secure the gear cover.

Replacing the Drive Belts

If the auger/impeller drive belt or the traction drive belt becomes worn, oil-soaked, or otherwise damaged, go to www.Toro.com for additional service information or have an Authorized Service Dealer replace the belt.

Storage



- **Gasoline vapors can explode.**
- **Do not store gasoline more than 30 days.**
- **Do not store the snowthrower in an enclosure near an open flame.**
- **Allow the engine to cool before storing it.**

Preparing the Snowthrower for Storage

1. On the last refueling of the year, add fuel stabilizer to fresh fuel as directed by the engine manufacturer.
2. Run the engine for 10 minutes to distribute the conditioned fuel through the fuel system.
3. Loosen the hose clamp that secures the fuel line to the valve and slide the fuel line off the fuel shutoff valve.
4. Open the fuel shutoff valve and allow the fuel to drain out of the fuel tank into an approved fuel container.
5. Install the fuel line onto the fuel shutoff valve and secure it with a hose clamp.
6. Run the snowthrower until the engine stops from running out of fuel.
7. Prime the engine and start it again.
8. Allow the engine to run until it stops. When you can no longer start the engine, it is sufficiently dry.
9. Stop the engine and allow it to cool.
10. Remove the ignition key.
11. Disconnect the spark plug wire.
12. Remove the spark plug, add 1 oz. (30 ml) of oil through the spark plug hole, and pull the starter rope **slowly** several times to distribute oil throughout the cylinder to prevent cylinder corrosion during the off-season.
13. Loosely install the spark plug.
14. Dispose of any unused fuel properly. Recycle it according to local codes, or use it in your automobile.

    Note: Do not store stabilized fuel for more than 90 days.
15. Clean the snowthrower thoroughly.
16. Tighten all loose screws, bolts, and locknuts. Repair or replace any damaged parts.

Removing the Snowthrower from Storage

1. Remove the spark plug and spin the engine rapidly using the starter to blow the excess oil from the cylinder.
2. Install the spark plug by hand and then torque it to 15 ft-lb (20.4 N·m).
3. Connect the spark plug wire.
4. Perform the annual maintenance procedures as given in the Recommended Maintenance Schedule.

Troubleshooting

Problem	Possible Cause	Corrective Action
Engine does not start or starts hard	1. The key is not in the ignition or is in the Stop position.	1. Insert the key into the ignition and turn it to the On position.
	2. The choke is in the Off position and the primer has not been pressed.	2. Move the choke to the On position and press the primer 3 times.
	3. The fuel shutoff valve is not open.	3. Open the fuel shutoff valve.
	4. The throttle is not in the Fast position.	4. Move the throttle to the Fast position.
	5. The fuel tank is empty or the fuel system contains stale fuel.	5. Drain and/or fill the fuel tank with fresh gasoline (not more than 30 days old). If the problem persists, contact an Authorized Service Dealer.
	6. The spark plug wire is loose or disconnected.	6. Connect the wire to the spark plug.
	7. The spark plug is pitted, fouled, or the gap is incorrect.	7. Check the spark plug and adjust the gap if necessary. Replace the spark plug if it is pitted, fouled, or cracked.
	8. The fuel vent cap is restricted.	8. Remove the vent restriction or replace the fuel cap.
	9. The engine oil level in the engine crankcase is too low or too high.	9. Add or drain oil to adjust the oil level in the engine crankcase to the Full mark on the dipstick.
Engine runs rough	1. The choke is in the On position.	1. Move the choke to the Off position.
	2. The fuel shutoff valve is not completely open.	2. Open the fuel shutoff valve.
	3. The fuel tank is nearly empty or contains stale fuel.	3. Drain and fill the fuel tank with fresh gasoline (not more than 30 days old). If the problem persists, contact an Authorized Service Dealer.
	4. The spark plug wire is loose.	4. Connect the wire to the spark plug.
	5. The spark plug is pitted, fouled, or the gap is incorrect.	5. Check the spark plug and adjust the gap if necessary. Replace the spark plug if it is pitted, fouled, or cracked.
	6. The engine oil level in the engine crankcase is too low or too high.	6. Add or drain oil to adjust the oil level in the engine crankcase to the Full mark on the dipstick.

Problem	Possible Cause	Corrective Action
Engine runs, but the snowthrower discharges snow poorly or not at all	1. The throttle is not in the Fast position when throwing snow.	1. Move the throttle to the Fast position.
	2. The snowthrower is moving too fast to clear the snow.	2. Shift the snowthrower into a lower gear.
	3. You are trying to remove too much snow per swath.	3. Reduce the amount of snow removed per swath.
	4. You are trying to remove extremely heavy or wet snow.	4. Don't overload the snowthrower with extremely heavy or wet snow.
	5. The discharge chute is plugged.	5. Unclog the discharge chute.
	6. The auger/impeller drive belt is loose or is off the pulley.	6. Install and/or adjust the auger/impeller drive belt; refer to www.Toro.com for servicing information or take the snowthrower to an Authorized Service Dealer.
	7. The auger/impeller drive belt is worn or broken.	7. Replace the auger/impeller drive belt; refer to www.Toro.com for servicing information or take the snowthrower to an Authorized Service Dealer.
Discharge chute either does not lock into place or does not move	1. The discharge chute latch is not properly adjusted.	1. Adjust the discharge chute latch.
Snowthrower does not properly clear the snow off the surface	1. The skids and/or scraper are not properly adjusted.	1. Adjust the skids and/or the scraper.
	2. The pressure in the tires is not equal.	2. Check and adjust the pressure in one or both tires.


TORO®