Form No. 3354–141 Rev A

Leaf Mulcher Kit

72in Side Discharge Mower for Groundsmaster 3320 & 3280–D

Part No. 108–5273

Installation Instructions

Note: Determine the left, right, front, and rear sides of the machine while seated in the normal operating position.

Removing the Existing Baffles

Note: In the steps below, the bolts are threaded into the mower. Remove the nuts first before removing bolts.

1. Remove the cam locks, washers, and the nut and bolt from the adjustable flow baffle (Fig. 1).
2. Remove the bolts and nuts holding the left baffle in place (Fig. 1).
3. Remove the bolts and nuts holding the discharge baffle (Fig. 1).

Note: Save the baffles and hardware for use when changing to side discharging mode.

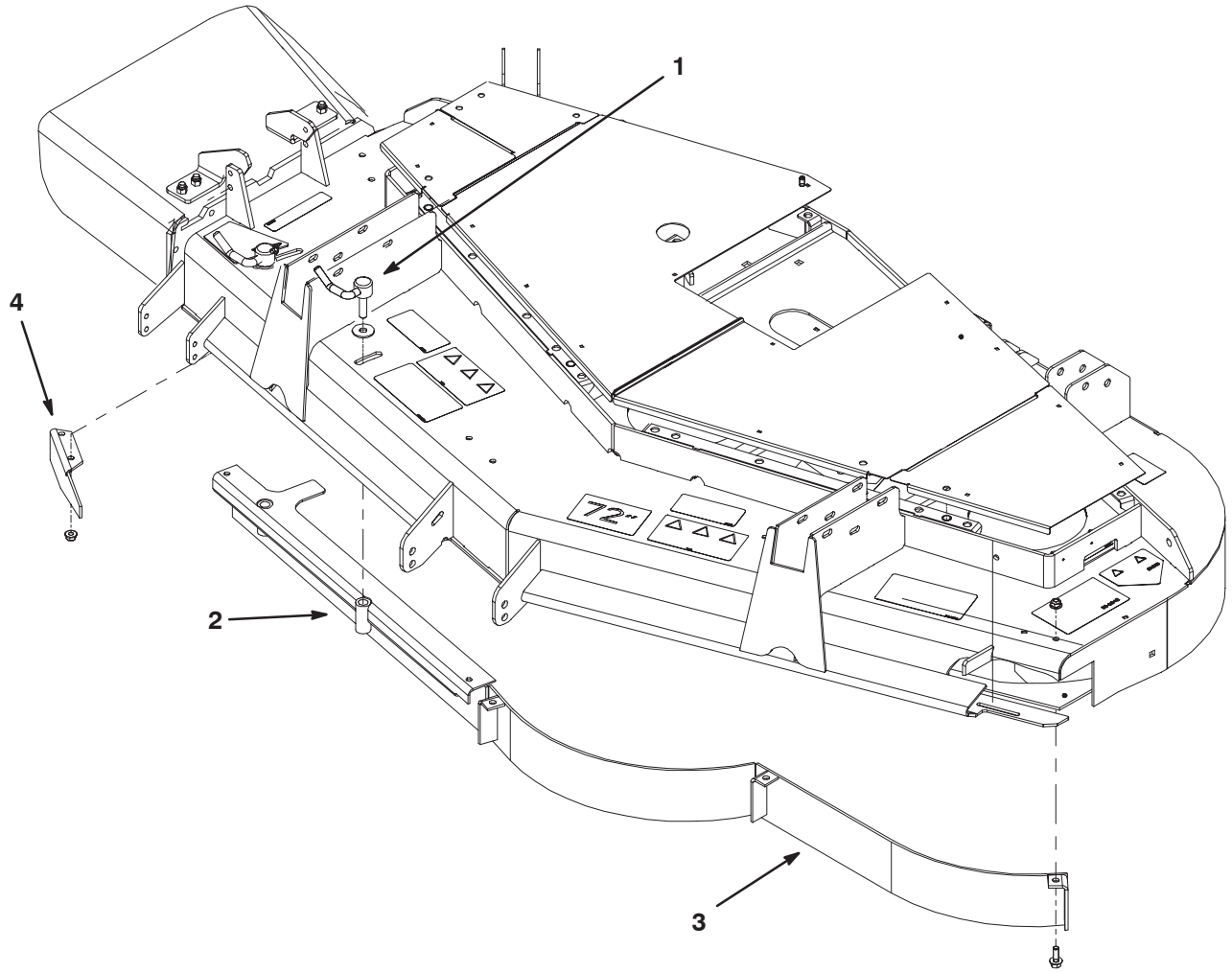

Figure 1

1. Cam lock assembly
2. Adjustable flow baffle
3. Left baffle
4. Discharge baffle

© 2005 by The Toro Company
8111 Lyndale Avenue South
Bloomington, MN 55420-1196

All Rights Reserved
Printed in the USA

Installing the Baffles

1. Thoroughly clean mower deck. All debris must be removed to ensure baffles will fit properly against mower deck.

2. Repair all bent or damaged areas of mower deck and replace any missing parts.

Note: All holes do not exist in the mower for installing the new baffles. Use the aligned baffle as a template and drill the required 3/8” dia. holes.

Note: Loosely install all baffles to align them with the holes in the mower. Tighten the bolts into the mower first, before tightening the flange nuts.

3. Insert the baffle assembly into the mower (Fig. 2).

4. Secure the baffle assembly to the mower with (5) carriage bolts and flange nuts. A washer is also used on the front right bolt and nut which are mounted through the slot (Fig. 2).

5. Secure the (2) divider plates to the mower and to the baffle assembly with (2) carriage bolts and flange nuts each positioning as shown in figure 2.

6. Secure the rear baffle to the mower and baffle assembly with (2) carriage bolts and flange nuts (Fig. 2).

7. Tighten all bolts and flange nuts.

8. Rotate the blades to make sure they do not contact the baffles. Adjust the baffles as required.

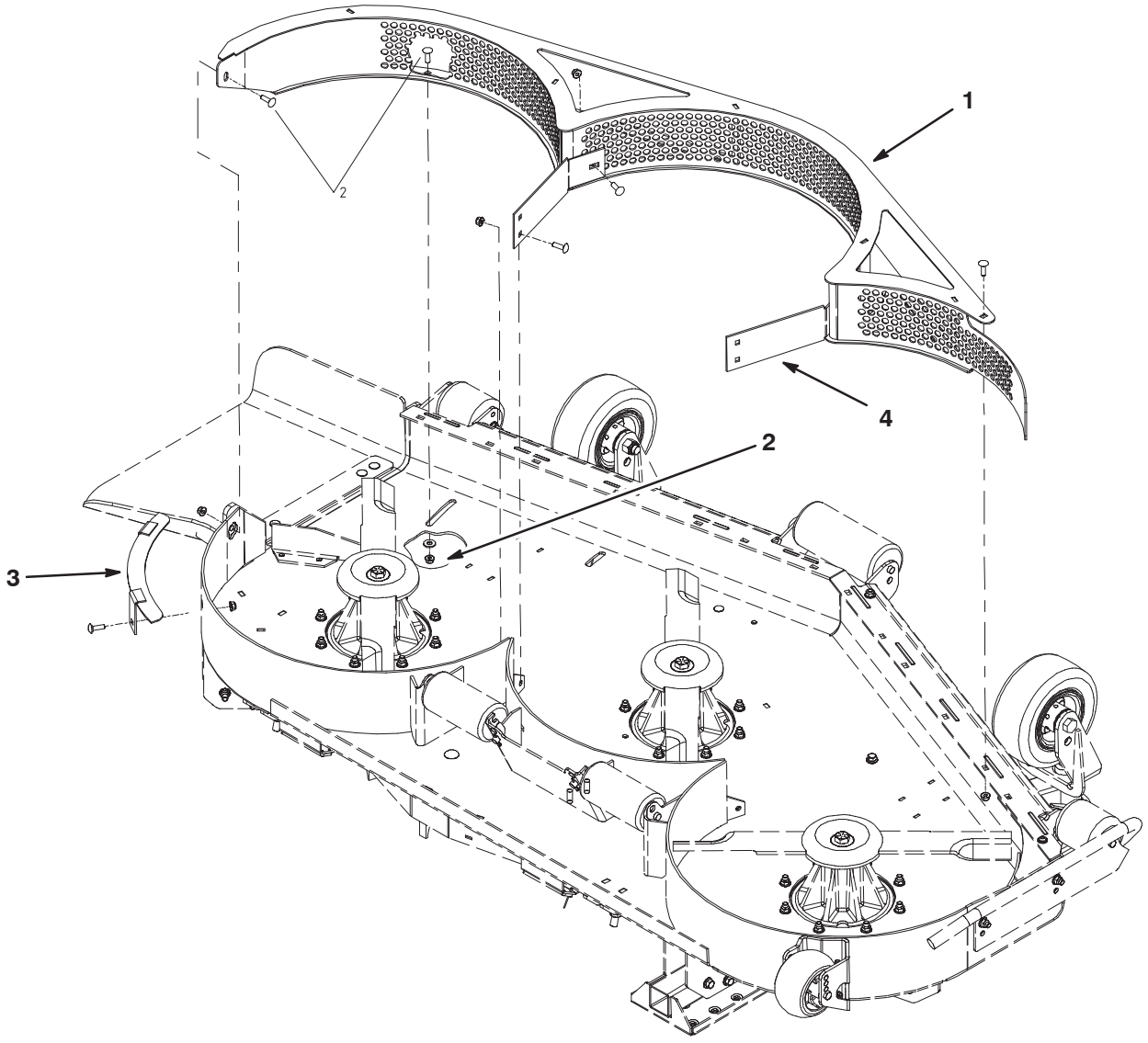

Figure 2

1. Baffle assembly
2. Washer
3. Rear baffle
4. Divider plate (2)