FORM NO. 3313-482

TORO®

MODEL NO. 16793-8000001 & UP

**PARTS CATALOG**

# 21" S.P. SIDE DISCHARGE KEY-LECTRIC

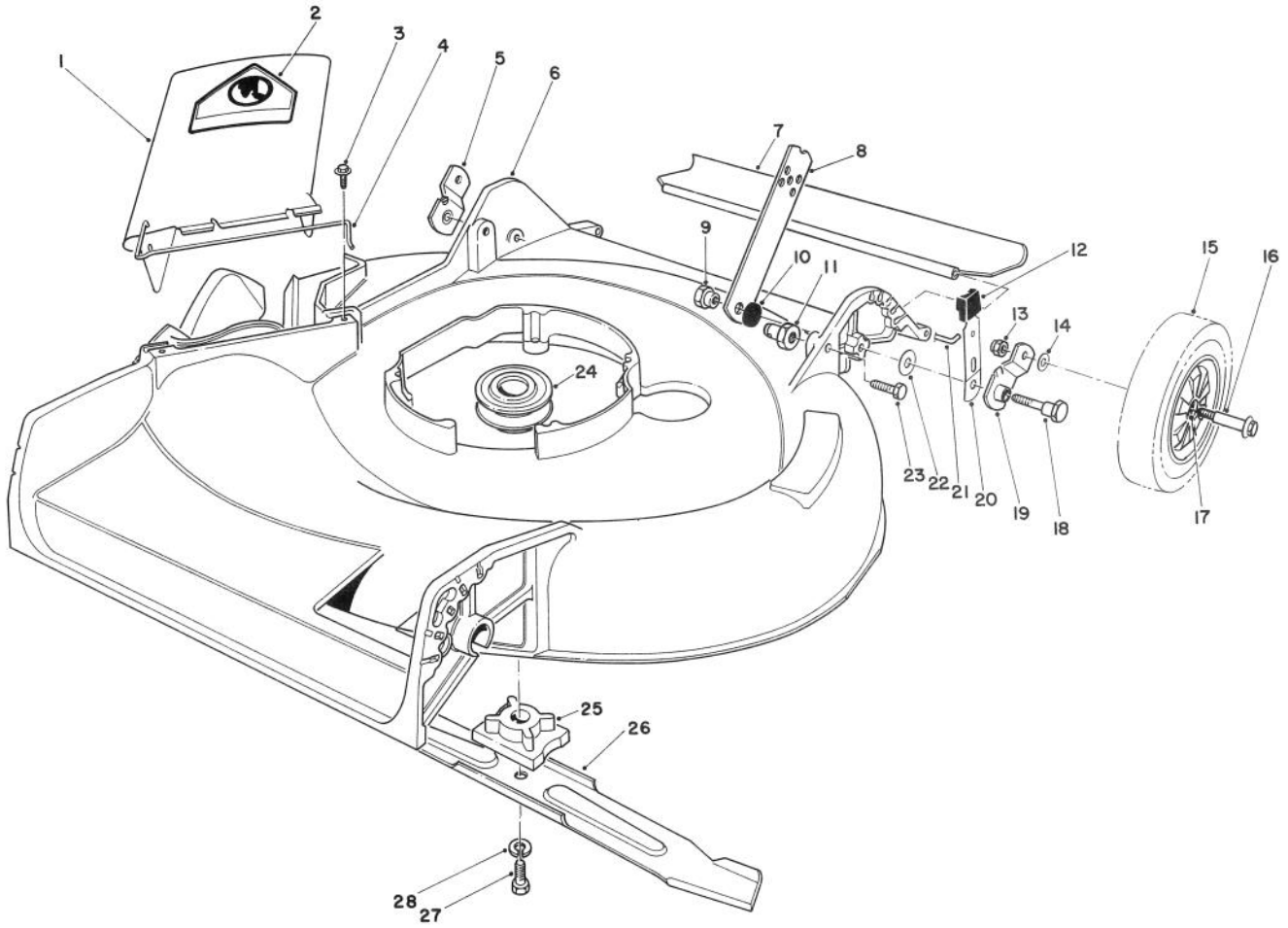


## HOUSING ASSEMBLY

| Ref. No. | Part No. | Description | No. Used |
|---|---|---|---|
| 1 | 27-7817 | Deflector Assembly (Incl. Ref#2 & 4) | 1 |
| 2 | 39-5770 | Decal — Danger | 1 |
| 3 | 46-6811 | Screw with Washer | 2 |
| 4 | 20-2640 | Hinge — Spring | 1 |
| 5 | 20-2130 | Pivot Arm Assembly 'B' | 1 |
| 6 | 11-4639 | Housing — 21" | 1 |
| 7 | 22-4950 | Shield — Rear | 1 |
| 8 | 27-7080 | Latch — Handle | 2 |
| 9 | 27-6520 | Shoulder Nut | 2 |
| 10 | 3-3287 | Spacer — Handle Latch | 2 |
| 11 | 12-2080 | Shoulder Nut | 2 |
| 12 | 25-7740 | Knob — Spring Arm | 2 |
| 13 | 52-3620 | Locknut | 2 |
| 14 | 40-1940 | Washer — Wheel Bolt | 2 |

| Ref. No. | Part No. | Description | No. Used |
|---|---|---|---|
| 15 | 27-6200 | Wheel & Tire Assembly (Inc. Ref. #17) | 2 |
| 16 | 27-6230 | Wheel Bolt | 2 |
| 17 | 27-6250 | Bushing | 4 |
| 18 | 28-8880 | Pivot Screw | 2 |
| 19 | 20-2140 | Pivot Arm Assembly 'A' | 1 |
| 20 | 25-8000 | Spring Arm Assembly | 2 |
| 21 | 33-3201 | Rod — Rear Shield | 1 |
| 22 | 5-4460 | Washer — Pivot | 2 |
| 23 | 322-6 | Capscrew Hex Hd. | 2 |
| 24 | 23-0130 | Pulley — Driver | 1 |
| 25 | 49-7890 | Retainer Blade | 1 |
| 26 | 20-2720 | Blade — 21" | 1 |
| 27 | 26-0671 | Blade Screw | 1 |
| 28 | 3253-22 | Lockwasher | 1 |
| | | Loose Parts | 1 |

©The Toro Company — 1988

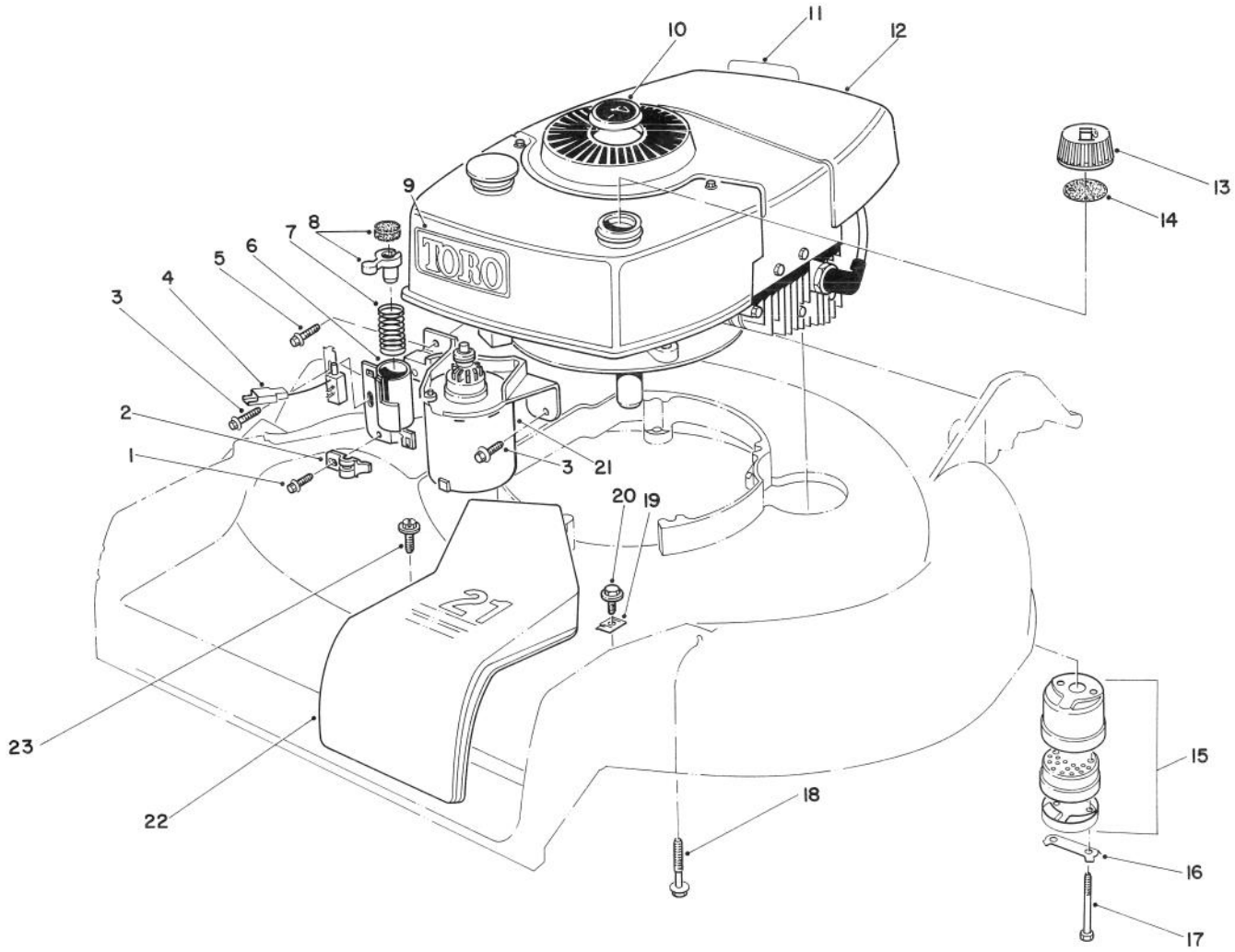


# ENGINE ASSEMBLY

| Ref. No. | Part No. | Description | No. Used |
|---|---|---|---|
| 1 | 12-5450 | Screw — Tapping | 1 |
| 2 | 46-6530 | Clamp — Cable | 1 |
| 3 | 12-3270 | Screw — Tapping | 2 |
| 4 | 47-6530 | Switch — Push Button | 1 |
| 5 | 11-9760 | Screw — Tapping | 1 |
| 6 | 46-5840 | Tube Assembly | 1 |
| 7 | 47-2180 | Spring — Compression | 1 |
| 8 | 47-7350 | Plunger & Pad Assembly | 1 |
| 9 | 44-0510 | Decal — Toro | 1 |
| 10 | 38-1480 | Plug Button | 1 |
| 11 | 37-1580 | Decal — Maintenance | 1 |
| 12 | | Engine | 1 |
| 13 | 42-0682 | Gas Cap Assembly (Incl. Ref. #14) | 1 |

| Ref. No. | Part No. | Description | No. Used |
|---|---|---|---|
| 14 | 20-4620 | Gasket | 1 |
| 15 | 5-4769 | Muffler Assembly Incl. Ref. #16 & 17) | 1 |
| 16 | 3-5094 | Locking Clip | 1 |
| 17 | 321-20 | Capscrew | 2 |
| 18 | 11-0580 | Screw — Engine | 3 |
| 19 | 46-5610 | Clamp — Cable | 1 |
| 20 | 32144-70 | Screw — Thread Forming | 1 |
| 21 | 49-4210 | Starter Motor Assembly | 1 |
| 22 | 46-4780 | Belt Cover | 1 |
| 23 | 12-5450 | Screw | 2 |
| * | 39-5930 | Spark Arrestor Muffler (Optional)(Inc. Ref. #16 & 17) | 1 |

*Not illustrated

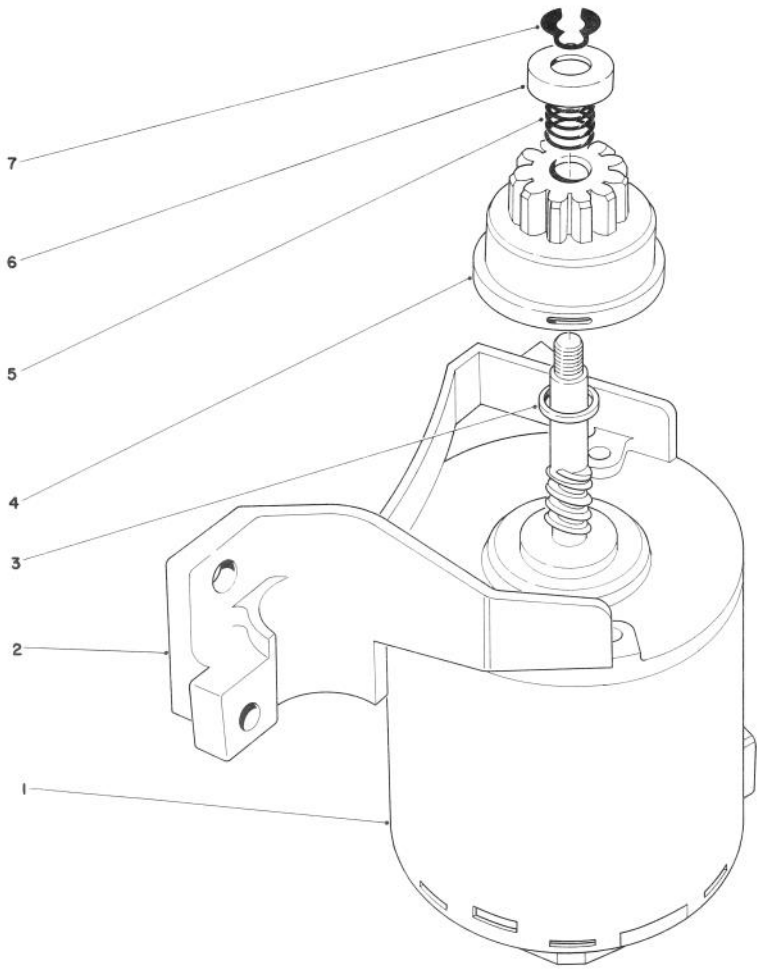


# STARTER ASSEMBLY

| Ref. No. | Part No. | Description | No. Used |
|---|---|---|---|
| 1 | 218-543 | End Frame w/Brushes & Electrical Terminal | 1 |
| 2 | 218-541 | End Frame w/Bushing | 1 |
| 3 | 23-9591 | Spacer | 1 |
| 4 | 43-4370 | Pinion Assembly | 1 |

| Ref. No. | Part No. | Description | No. Used |
|---|---|---|---|
| 5 | 44-0500 | Spring — Compression | 1 |
| 6 | 49-2170 | Pinion Stop | 1 |
| 7 | 32151-47 | Ring — Retaining Ext. | 1 |
| * | 49-4210 | Starter Assembly (Incl. Ref. #1-7) | 1 |

*Not Illustrated

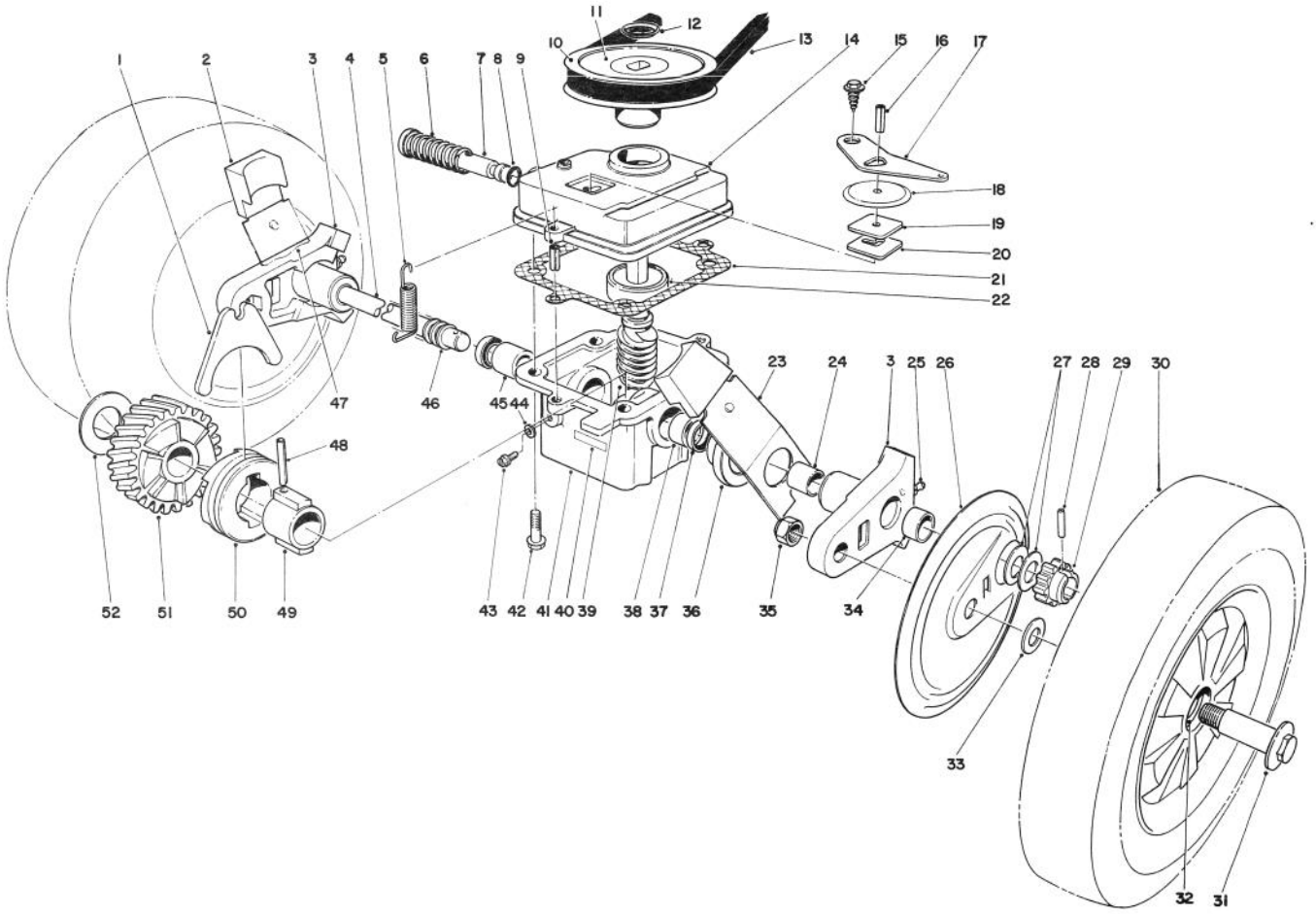


# GEAR CASE ASSEMBLY

| Ref. No. | Part No. | Description | No. Used |
|---|---|---|---|
| 1 | 5-3247 | Shifter Fork | 1 |
| 2 | 25-7740 | Knob Arm | 2 |
| 3 | 38-2220 | Pivot Arm (Inc. Ref. #24, 25 & 34) | 2 |
| 4 | 37-9440 | Drive Shaft | 1 |
| 5 | 17-4490 | Spring Belt Tension | 1 |
| 6 | 3-0731 | Spring | 1 |
| 7 | 46-8240 | Shifter Rod | 1 |
| 8 | 237-137 | "O" Ring | 1 |
| 9 | 32121-1 | Roll Pin | 2 |
| 10 | 18-9760 | Pulley | 1 |
| 11 | 33-2450 | Decal — Caution | 1 |
| 12 | 3290-346 | Push On Retainer | 1 |
| 13 | 5-4505 | V-Belt | 1 |
| 14 | 39-1101 | Gear Case Cover | 1 |
| 15 | 32140-64 | Screw — Self Tapping | 1 |
| 16 | 32121-114 | Roll Pin | 1 |
| 17 | 5-3252 | Shifter Arm | 1 |
| 18 | 52-7380 | Transmission Dust Cover | 1 |
| 19 | 52-7370 | Filter — Dust | 1 |
| 20 | 3-0681 | Latch Plate | 1 |
| 21 | 36-1000 | Gasket — Gear Case | 1 |

| Ref. No. | Part No. | Description | No. Used |
|---|---|---|---|
| 22 | 47-7250 | Ball Bearing | 1 |
| 23 | 25-7930 | Spring Arm Assembly L.H. | 1 |
| 24 | 256-206 | Bushing | 2 |
| 25 | 302-56 | Grease Fitting | 2 |
| 26 | 52-7500 | Wheel Cover | 2 |
| 27 | 46-6510 | Thrust Washer | 4 |
| 28 | 32121-98 | Pin — Coil | 2 |
| 29 | 46-5930 | Pinion Gear | 2 |
| 30 | 11-1419 | Wheel, Tire & Gear Assembly (Incl. Ref. #32) | 2 |
| 31 | 27-6231 | Wheel Bolt | 2 |
| 32 | 27-6250 | Bushing — Wheel | 4 |
| 33 | 40-1940 | Washer — Wheel Bolt | 2 |
| 34 | 256-1 | Bushing | 2 |
| 35 | 52-3620 | Nut | 2 |
| 36 | 42-3520 | End Cap | 2 |
| 37 | 47-6730 | Oil Seal | 2 |
| 38 | 47-2890 | Bushing | 1 |
| 39 | 8-5679 | Worm Shaft & Gear (Incl. Ref. #51) | 1 |
| 40 | 40-4755 | Decal — Gear Box | 1 |

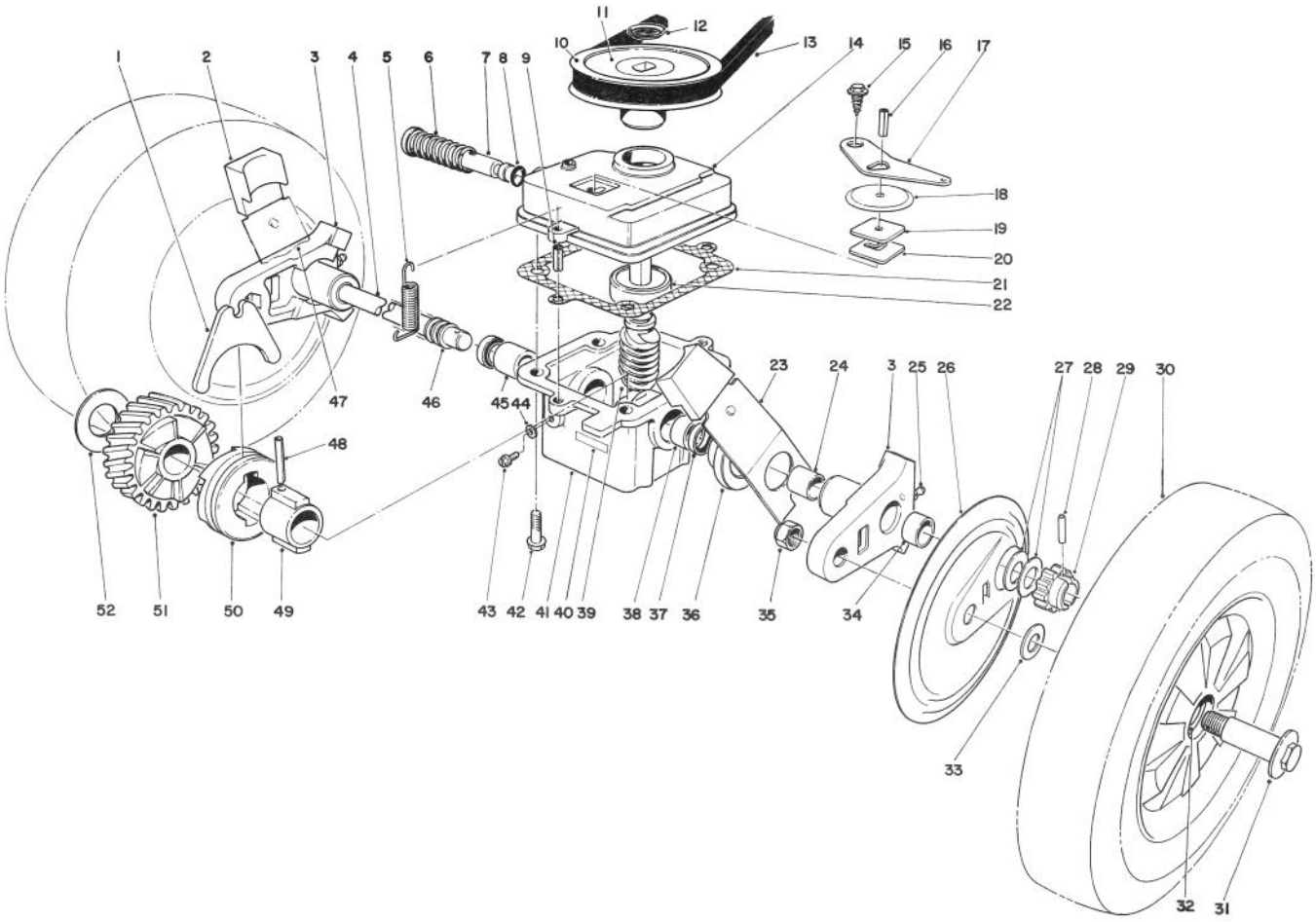


# GEAR CASE ASSEMBLY (continued)

| Ref. No. | Part No. | Description | No. Used |
|---|---|---|---|
| 41 | 8-0479 | Gear Case (Incl. Ref. #37, 38 & 45) | 1 |
| 42 | 11-9760 | Screw | 4 |
| 43 | 28-1550 | Screw — Nylon | 1 |
| 44 | 46-9640 | Gasket | 1 |
| 45 | 47-2900 | Bushing | 1 |
| 46 | 24-7920 | Cover Drive Shaft | 1 |
| 47 | 25-7920 | Spring Arm Assembly R.H. | 1 |
| 48 | 32121-88 | Coil Pin | 1 |

| Ref. No. | Part No. | Description | No. Used |
|---|---|---|---|
| 49 | 3-0721 | Sleeve | 1 |
| 50 | 19-5660 | Clutch Jaw | 1 |
| 51 | | Helical Gear | 1 |
| 52 | 3-0724 | Thrust Washer | 1 |
| * | 12-2399 | Gear Case Assembly (Complete) | 1 |
| * | 27-0490 | Bearing & Shaft Tool | 1 |
| *† | 39-9640 | Metric Bearing Tool | 1 |
| * | 27-0460 | Tool — Bushing | 1 |

*Not Illustrated
†Use with 27-0490 Bearing & Shaft Tool

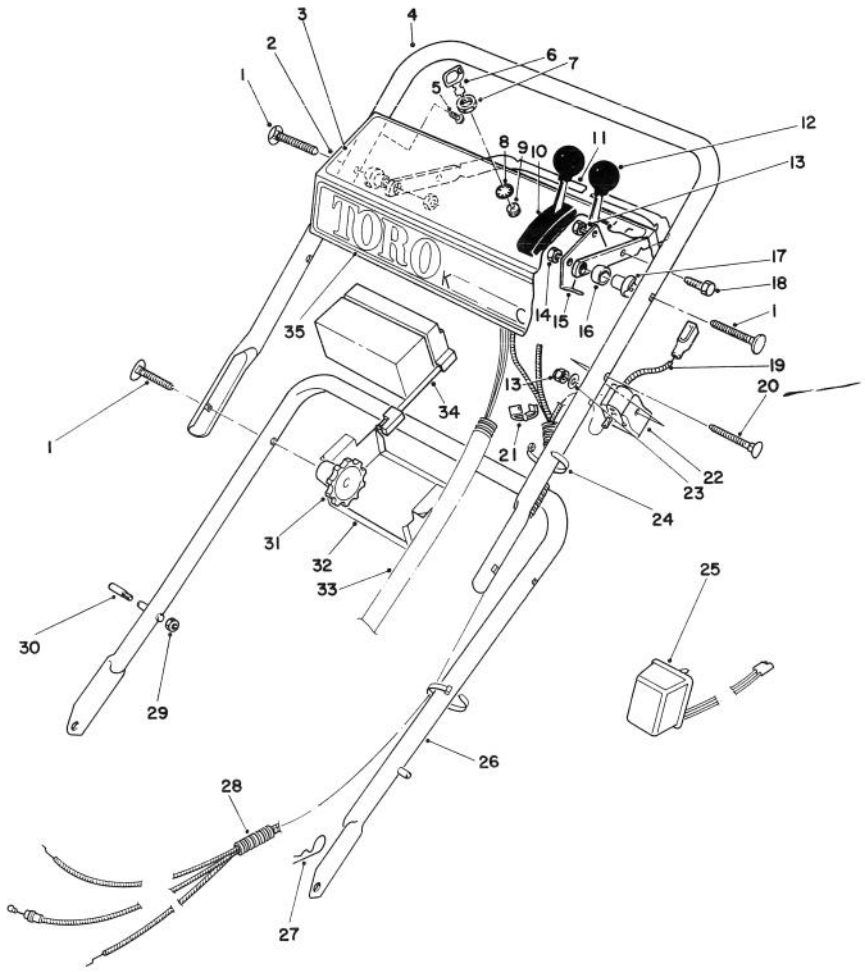


# HANDLE ASSEMBLY

| Ref. No. | Part No. | Description | No. Used |
|---|---|---|---|
| 1 | 17-9421 | Handle — Screw | 4 |
| 2 | 11-7029 | Panel — Control (Incl. Ref. #3) | 1 |
| 3 | 46-7430 | Decal — Instruction | 1 |
| 4 | 49-4234 | Handle — Upper | 1 |
| 5 | 32104-76 | Screw — Self Tapping | 5 |
| 6 | 62-7770 | Key | 1 |
| 7 | 218-461 | Nut | 1 |
| 8 | 3254-5 | Lockwasher | 1 |
| 9 | 46-5780 | Switch — Starter (Incl. Ref. #6-8) | 1 |
| 10 | 46-6040 | Control — Traction Bend Type 3 Sheath LG. 53″ (134.6 cm.) Wire LG. 2-3/16″ (5.5 cm.) | 1 |
| 11 | 62-3810 | Bar — Control | 1 |
| 12 | 46-6010 | Control — Throttle Bend Type 1 Sheath LG. 36-½″ (92.7 cm.) Wire LG. 2″ (5 cm.) | 1 |
| 13 | 3296-42 | Locknut | 2 |
| 14 | 3296-58 | Locknut | 2 |

| Ref. No. | Part No. | Description | No. Used |
|---|---|---|---|
| 15 | 66-5350 | Lever — Control | 1 |
| 16 | 256-276 | Spacer — Nylon | 1 |
| 17 | 49-1630 | Support — Spacer | 2 |
| 18 | 321-3 | Hex Hd. Capscrew | 1 |
| 19 | 43-4531 | Cable — Brake | 1 |
| 20 | 46-6434 | Screw — Handle | 1 |
| 21 | 2412-50 | Clip | 4 |
| 22 | 46-6980 | Support — Cable | 1 |
| 23 | 3256-22 | Washer | 1 |
| 24 | 3290-378 | Cable Tie | 3 |
| 25 | 6-9780 | Charger — Battery | 1 |
| 26 | 49-1690 | Lower Handle Assembly | 1 |
| 27 | 3290-255 | Hairpin Cotter | 2 |
| 28 | 46-6441 | Cover — Control Cable | 1 |
| †29 | 3296-47 | Locknut | 2 |
| †30 | 49-2750 | Pin — Handle | 2 |
| 31 | 19-4050 | Knob — Handle | 2 |
| 32 | 63-8480 | Retainer — Battery | 1 |
| 33 | 46-5811 | Wire Harness Assembly | 1 |
| 34 | 63-8570 | Battery Assembly | 1 |
| 35 | 46-8460 | Decal — Toro Key-lectric | 1 |

†Service Replacement Parts

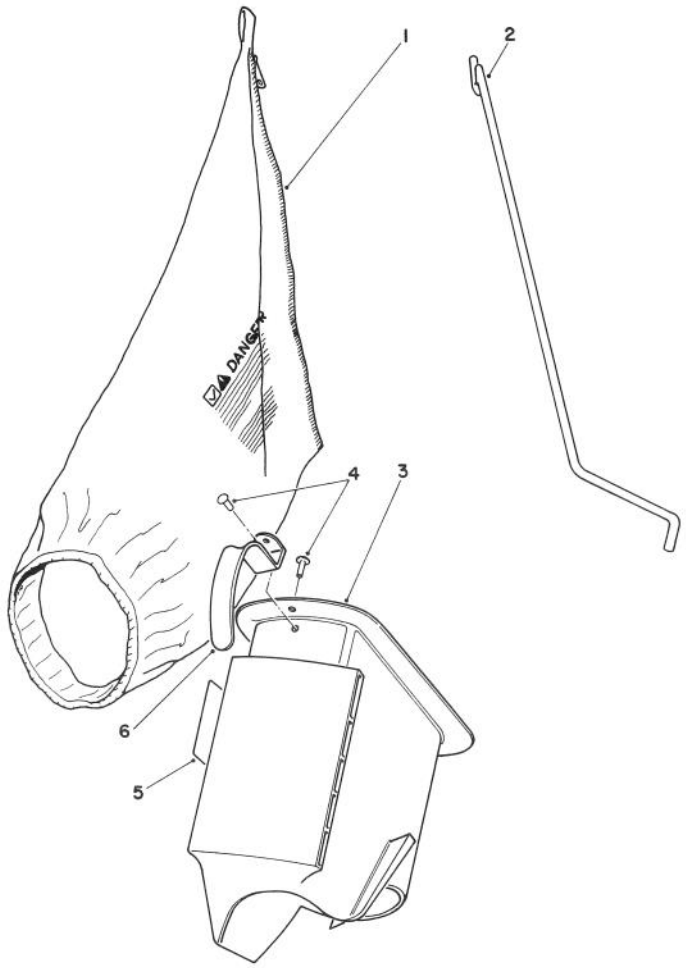


# BAGGING KIT NO. 47-6510 (Optional)

| Ref. No. | Part No. | Description | No. Used |
|---|---|---|---|
| 1 | 6-0929 | Grass Bag | 1 |
| 2 | 47-5830 | Bag Rod | 1 |
| 3 | 6-1089 | Grass Chute (Incl. Ref. #4 & 6) | 1 |

| Ref. No. | Part No. | Description | No. Used |
|---|---|---|---|
| 4 | 3295-26 | Rivet | 2 |
| 5 | 36-5230 | Decal — Bag Chute | 1 |
| 6 | 20-4650 | Handle Chute | 1 |

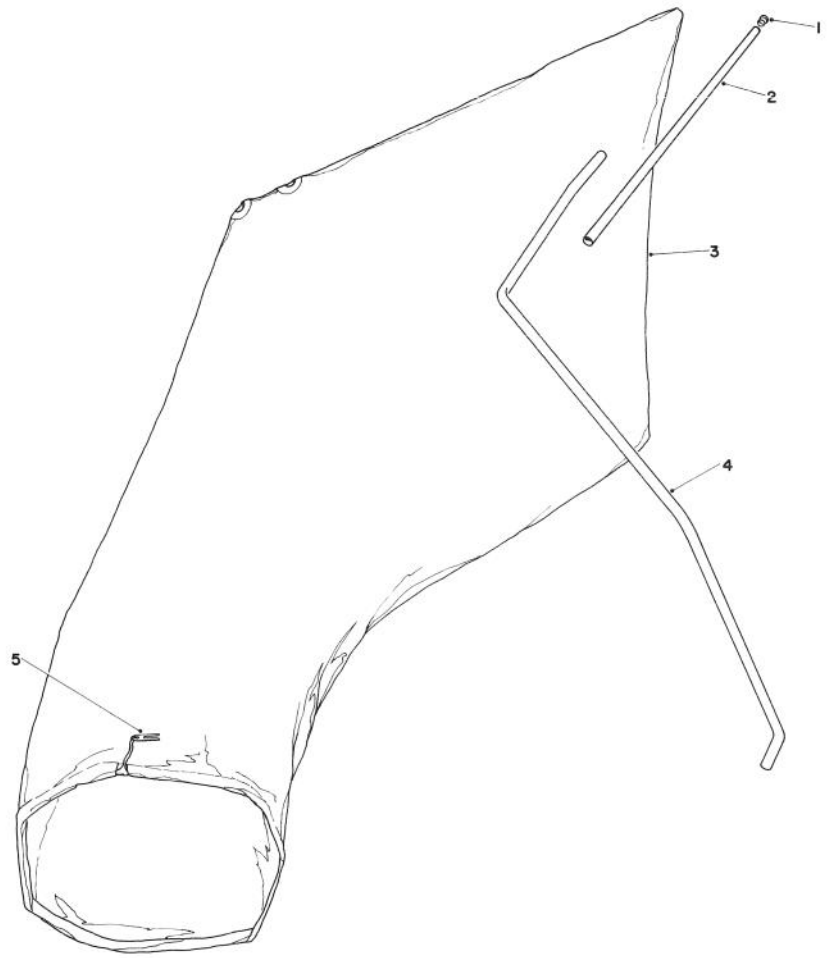


# GIANT BAGGING KIT NO. 29-9750 (Optional)

| Ref. No. | Part No. | Description | No. Used |
|---|---|---|---|
| 1 | 2410-29 | Cap | 1 |
| 2 | 29-7000 | Tube 25" | 1 |
| 3 | 8-4719 | Bag (Incl. Ref. #5) | 1 |

| Ref. No. | Part No. | Description | No. Used |
|---|---|---|---|
| 4 | 22-4820 | Hanger Rod | 1 |
| 5 | 3-2781 | Bag Cord Fasteners | 1 |

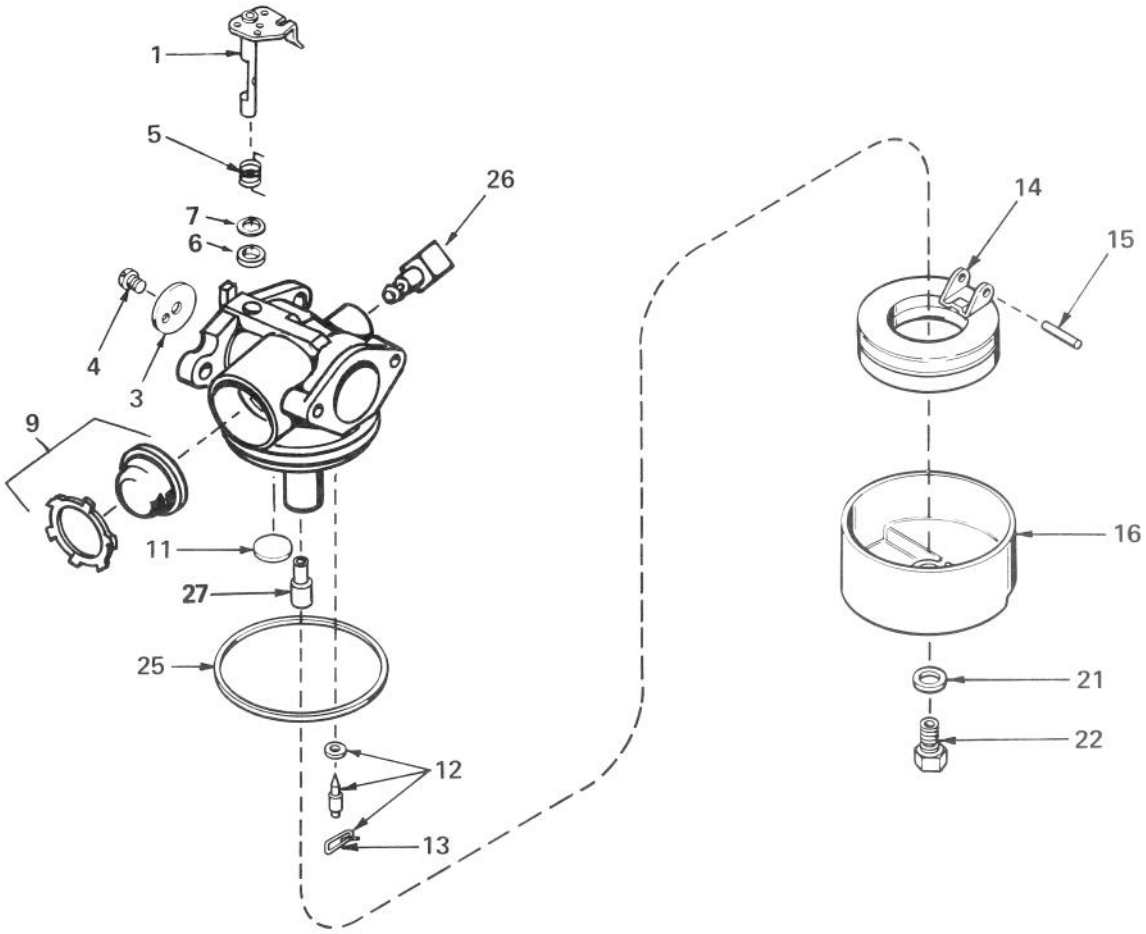


# CARBURETOR NO. 632050A

| Ref. No. | Part No. | Description | No. Used |
|---|---|---|---|
| 1 | 631615 | Shaft & Lever Assy., Throttle | 1 |
| 3 | 631616 | Shutter, Throttle | 1 |
| 4 | 650506 | Screw, Throttle Shutter | 1 |
| 5 | 631767 | Spring, Throttle Return | 1 |
| 6 | 631971 | Seal, Dust | 1 |
| 7 | 631184 | Washer, Flat | 1 |
| 9 | 632047 | Bulb & Retainer, Primer | 1 |
| 11 | 631027 | Plug, Welch | 1 |
| 12 | 631021 | Inlet Needle, Seat & Clip Assembly (Incl. Ref. #13) | 1 |

| Ref. No. | Part No. | Description | No. Used |
|---|---|---|---|
| 13 | 631022 | Clip, Inlet Needle | 1 |
| 14 | 632019 | Float, Carburetor | 1 |
| 15 | 631024 | Shaft, Float | 1 |
| 16 | 631700 | Bowl, Float | 1 |
| 21 | 631334 | Gasket, Bowl-To-Body | 1 |
| 22 | 631935 | Nut, Float Bowl | 1 |
| 25 | 631028 | Gasket, Bowl-To-Body | 1 |
| 26 | 631807 | Fitting, Fuel Inlet | 1 |
| 27 | 632158 | Spacer | 1 |

# ENGINE TECUMSEH MODEL NO. TNT100-10097F

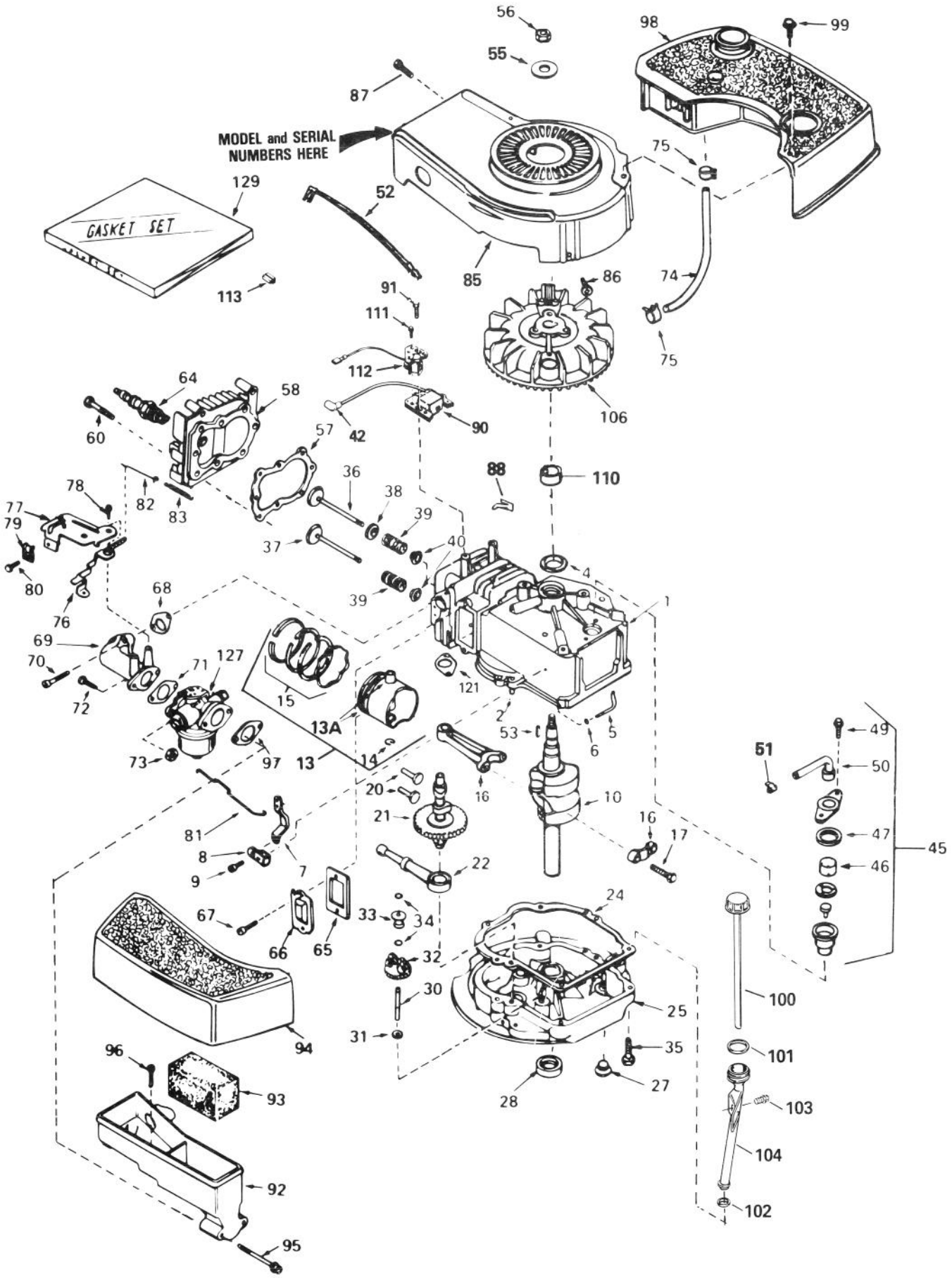

# ENGINE TECUMSEH MODEL NO. TNT100-10097F

| Ref. No. | Part No. | Description | No. Used |
|---|---|---|---|
| 1 | 34429A | Cylinder Assembly (Incl. Ref. #2 & 4) | 1 |
| 2 | 26727 | Pin, Dowel | 2 |
| 4 | 32600 | Seal, Oil | 1 |
| 5 | 30589 | Rod, Governor (Incl. Ref. #6) | 1 |
| 6 | 28277 | Washer, Flat | 1 |
| 7 | 32651 | Lever, Governor | 1 |
| 8 | 31335 | Clamp, Governor Lever | 1 |
| 9 | 650548 | Screw, Hex Washer Head | 1 |
| 10 | 34440 | Crankshaft | 1 |
| 13 | 35544 | Piston, Pin & Ring Assy. (Std.) (Incl. Ref. #13A, 14 & 15) | 1 |
| 13 | 35545 | Piston, Pin & Ring Assembly (.010 oversize) (Incl. Ref. #13A, 14 & 15) | 1 |
| 13 | 35546 | Piston, Pin & Ring Assembly (.020 oversize) (Incl. Ref. #13A, 14 & 15) | 1 |
| 13A | 35541 | Piston & Pin Assembly (Std.) (Incl. Ref. #14) | 1 |
| 13A | 35542 | Piston & Pin Assembly (.010 oversize) (Incl. Ref. #14) | 1 |
| 13A | 35543 | Piston & Pin Assembly (.020 oversize) (Incl. Ref. #14) | 1 |
| 14 | 20381 | Ring, Piston Pin Retaining | 2 |
| 15 | 35547 | Ring Set, Piston (Std.) | 1 |
| 15 | 35548 | Ring Set, Piston (.010 oversize) | 1 |
| 15 | 35549 | Ring Set, Piston (.020 oversize) | 1 |
| 16 | 30963B | Rod Assembly, Connecting (Incl. Ref. #17) | 1 |
| 17 | 32610A | Bolt, Connecting Rod | 2 |
| 20 | 27241 | Lifter, Valve | 2 |
| 21 | 33553 | Camshaft (Mechanical Compression Release) | 1 |
| 22 | 29914 | Pump Assembly, Oil | 1 |
| 24 | *35261 | Gasket, Mounting Flange | 1 |
| 25 | 34831 | Flange Assembly, Mounting (Incl. Ref. #27, 28 & 30) | 1 |
| 27 | 27244 | Plug, Oil Drain | 1 |
| 28 | 26208 | Seal, Oil | 1 |
| 30 | 30574 | Shaft, Mechanical Governor | 1 |
| 31 | 30590A | Washer, Flat | 1 |
| 32 | 30591 | Gear Assembly, Governor (Incl. Ref. #31) | 1 |
| 33 | 30588A | Spool, Governor | 1 |
| 34 | 29193 | Ring, Retaining | 2 |
| 35 | 650488 | Screw, Hex Head Sems | 6 |
| 36 | 29314B | Valve, Intake (Std.) (Incl. Ref. #40) | 1 |
| 36 | 29315C | Valve, Intake (1/32" oversize) (Incl. Ref. #40) | 1 |
| 37 | 29313C | Valve, Exhaust (Std.) (Incl. Ref. #40) | 1 |
| 37 | 29315C | Valve, Exhaust (1/32" oversize) (Incl. Ref. #40) | 1 |
| 38 | 35390 | Seal Assembly, Intake Valve | 1 |
| 39 | 31672 | Spring, Valve | 2 |
| 40 | 31673 | Cap, Lower Valve Spring | 2 |
| 42 | 610118 | Cover, Spark Plug | 1 |
| 45 | 34214A | Breather Assembly (Incl. Ref. #46 thru 51) | 1 |
| 46 | 33734 | Element, Breather | 1 |
| 47 | *33735 | Gasket, Breather | 1 |
| 49 | 30200 | Screw, Hex Washer Head Self-Tap Sems | 2 |
| 50 | 33886 | Tube, Breather | 1 |
| 51 | 33887 | Clip, Breather Tube | 1 |
| 52 | 35020 | Wire, Ground | 1 |
| 53 | 611004 | Key, Flywheel | 1 |
| 55 | 650815 | Washer, Belleville | 1 |
| 56 | 650816 | Nut, Flywheel | 1 |
| 57 | *33015 | Gasket, Cylinder Head | 1 |
| 58 | 34342 | Head, Cylinder | 1 |
| 60 | 6021A | Screw, Hex Flange Head | 8 |
| 64 | 35395 | Plug, Spark (Champion RJ-19LM or equivalent) | 1 |
| 65 | *27234 | Gasket, Valve Spring Cover | 1 |
| 66 | 32755 | Cover, Valve Spring Box | 1 |
| 67 | 650128 | Screw, Fil. Head Sems | 2 |
| 68 | *34690 | Gasket, Intake Pipe | 1 |
| 69 | 33004A | Pipe, Intake (Incl. Ref. #68) | 1 |
| 70 | 650451 | Screw, Hex Head Sems | 2 |
| 71 | *31688 | Gasket, Carburetor | 1 |
| 72 | 6201 | Screw, Hex Head | 2 |
| 73 | 29752 | Nut & Lockwasher Assembly | 2 |
| 74 | 30705 | Line, Fuel | 1 |
| 75 | 26460 | Clamp, Fuel Line | 2 |
| 76 | 34310 | Lever, Control | 1 |
| 77 | 33889A | Control Assembly, Speed (Incl. Ref. #76 & 78) | 1 |
| 78 | 650804 | Screw, Hex Washer Head Shoulder, Self-Tap | 1 |
| 79 | 27793 | Clip, Conduit | 1 |
| 80 | 28942 | Screw, Hex Washer Head Sems | 1 |
| 81 | 34336 | Link, Governor-To-Throttle | 1 |
| 82 | 33151 | Link, Governor Spring | 1 |
| 83 | 33890 | Spring, Governor | 1 |
| 85 | 33891B | Housing, Blower | 1 |
| 86 | 650561 | Screw, Hex Washer Head Durlok | 2 |
| 87 | 30200 | Screw, Hex Washer Head Self-Tap Sems | 2 |
| 88 | 29443 | Clip, Spring | 1 |
| 90 | 34443A | Solid State Assembly | 1 |
| 91 | 650814 | Screw, Hex Head Sems | 2 |
| 92 | 33895 | Body, Air Cleaner | 1 |
| 93 | 33896 | Filter, Air Cleaner | 1 |
| 94 | 33897 | Cover, Air Cleaner | 1 |
| 95 | 650762 | Screw, Fil. Head Sems | 2 |
| 96 | 650804 | Screw, Hex Washer Head Shoulder, Self-Tap | 1 |
| 97 | *33051 | Gasket, Air Cleaner | 1 |
| 98 | 33904B | Tank, Fuel (Inc. Ref. #75) | 1 |
| 99 | 28763 | Screw, Hex Washer Head Shakeproof | 2 |
| 100 | 35582 | Dipstick, Oil | 1 |
| 101 | 35499 | "O" Ring, Dipstick | 1 |
| 102 | 34265 | Gasket, Fill Tube | 1 |
| 103 | 650562 | Screw, Hex Washer Head Shakeproof | 1 |
| 104 | 35581 | Tube, Oil Fill | 1 |
| 106 | 611050 | Flywheel | 1 |
| 110 | 34080 | Spacer, Flywheel Key | 1 |
| 111 | 650767 | Screw, Hex Head Sems Taptite | 2 |
| 112 | 34990 | Alternator Coil Assembly | 1 |
| 113 | 34977 | Connector, Body | 1 |
| 121 | *30081 | Gasket, Exhaust | 1 |
| 127 | 632050A | Carburetor (Incl. Ref. #71) | 1 |
| 129 | 33906A | Gasket Set (Incl. items marked*) | 1 |

*Indicates parts included in Gasket Set, Ref. #129.

# PRODUCT CHANGES

In an effort to make improvements available to TORO owners as quickly as possible, minor changes are incorporated into Toro's products from time to time that do not become immediately shown in the Parts Catalog. If such a change apparently has been made in your unit, which is not reflected in your manual, see your TORO Distributor or his Authorized TORO Service Dealer for information and part numbers.

# IDENTIFICATION AND ORDERING

### MODEL AND SERIAL NUMBERS

The Mower has two identification numbers: a model number and a serial number. The two numbers are stamped on a decal which is located on the mower housing between the rear wheels. In any correspondence concerning the mower, supply model and serial numbers to assure that correct information and replacement parts are obtained.

To order replacement parts from an Authorized TORO Service Dealer, supply the following information:

1. Model and serial numbers of the mower.
2. Part number, description, and quantity of part(s) desired.

**Note:** Do not order by reference number if a parts catalog is being used; use the PART NUMBER.

# The Toro Promise

***A Two Year Limited Warranty***

*On All*

*Gasoline Powered Consumer Products*

*The Toro Company promises to repair your TORO Product if defective in materials or workmanship. The following time periods from the date of purchase apply:*

Residential Product ..... 2 Years
Residential Products Used Commercially ..... 45 Days

*The costs of parts and labor are included, but the customer pays the transportation costs. Just return any residential product to an Authorized TORO Service Dealer or TORO Distributor.*

Should you feel your TORO Product is defective and wish to rely on The Toro Promise, the following procedure is recommended:

1. Contact any Authorized TORO Service Dealer, TORO Master Service Dealer, or TORO Distributor (the Yellow Pages of your telephone directory is a good reference source).
2. He will either instruct you to return the product to him or recommend another Authorized TORO Service outlet which might be more convenient.
3. Bring the product along with your original sales slip, or other evidence of purchase date, to the service dealer.
4. The servicing dealer will inspect the unit, advise you whether the product is defective and, if so, make all repairs necessary to correct the defect without extra charge to you.

If for any reason you are dissatisfied with the dealer's analysis of the defect or the service performed, you may contact us.

Write:

TORO Consumer Service Department
8111 Lyndale Avenue South
Minneapolis, Minnesota 55420

The above remedy of product defects through repair by an Authorized TORO Service Dealer is the purchaser's sole remedy for any defect.

THERE IS NO OTHER EXPRESS WARRANTY. ALL IMPLIED WARRANTIES OF MERCHANTABILITY AND FITNESS FOR USE ARE LIMITED TO THE DURATION OF THE EXPRESS WARRANTY.

Some states do not allow limitations on how long an implied warranty lasts, so the above limitation may not apply to you.

This warranty applies only to parts or components which are defective and does not cover repairs necessary due to normal wear, misuse, accidents, or lack of proper maintenance. Regular, routine maintenance of the unit to keep it in proper operating condition is the responsibility of the owner.

All warranty repairs reimbursable under The Toro Promise must be performed by an Authorized TORO Service Dealer using Toro approved replacement parts.

Repairs or attempted repairs by anyone other than an Authorized TORO Service Account are not reimbursable under The Toro Promise. In addition, these unauthorized repair attempts may result in additional malfunctions, the correction of which is not covered by warranty.

THE TORO COMPANY IS NOT LIABLE FOR INDIRECT, INCIDENTAL OR CONSEQUENTIAL DAMAGES IN CONNECTION WITH THE USE OF THE PRODUCT INCLUDING ANY COST OR EXPENSE OF PROVIDING SUBSTITUTE EQUIPMENT OR SERVICE DURING PERIODS OF MALFUNCTION OR NON-USE.

Some states do not allow the exclusion or limitation of incidental or consequential damages, so the above limitation or exclusion may not apply to you.

This warranty gives you specific legal rights, and you may also have other rights which vary from state to state.

## COUNTRIES OTHER THAN THE UNITED STATES OR CANADA

Customers who have purchased TORO products exported from the United States or Canada should contact their TORO Distributor (Dealer) to obtain guarantee policies for your country, province or state. If for any reason you are dissatisfied with your Distributor's service or have difficulty obtaining guarantee information, contact the TORO importer. If all other remedies fail, you may contact us at The Toro Company.

Compliance with Radio Interference Regulations Certified.
Certifie Conforme au Reglement sur le Brouillage Radioelectrique.