Form No. 3354-156 Rev A

Weight Kit

For 2006 and After Fixed-Deck Mid-Size Mowers

Model No. 110-2085

Installation Instructions

Step 1

Installing the Weight

Parts needed for this step:

4	Locknut, (3/8 inch)
4	Flat washer
2	U-bolts
2	Weights

Procedure

1. Place a weight (Figure 1) onto each caster wheel support.

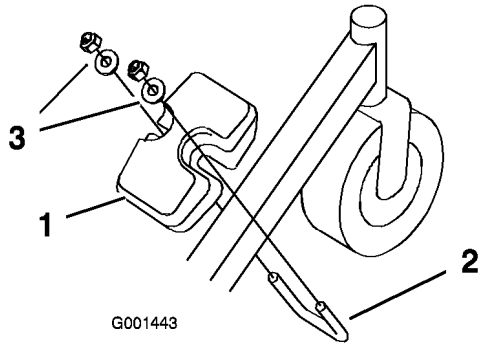

Figure 1

1. Weight
2. U-bolt
3. Flat washers and locknuts

2. Place a U-bolt (Figure 1) from the bottom of each caster wheel support through the weight.
3. Secure each weight with 2 flat washers and 2 locknuts (3/8 inch) (Figure 1).

© 2005—The Toro® Company
8111 Lyndale Avenue South
Bloomington, MN 55420

Register at www.Toro.com.

Original Instructions (EN)
Printed in the USA.
All Rights Reserved