FORM NO. 3313-509

TORO®

MODEL NO. 16585-8004252 & UP

PARTS CATALOG

21" H.P. SIDE DISCHARGE

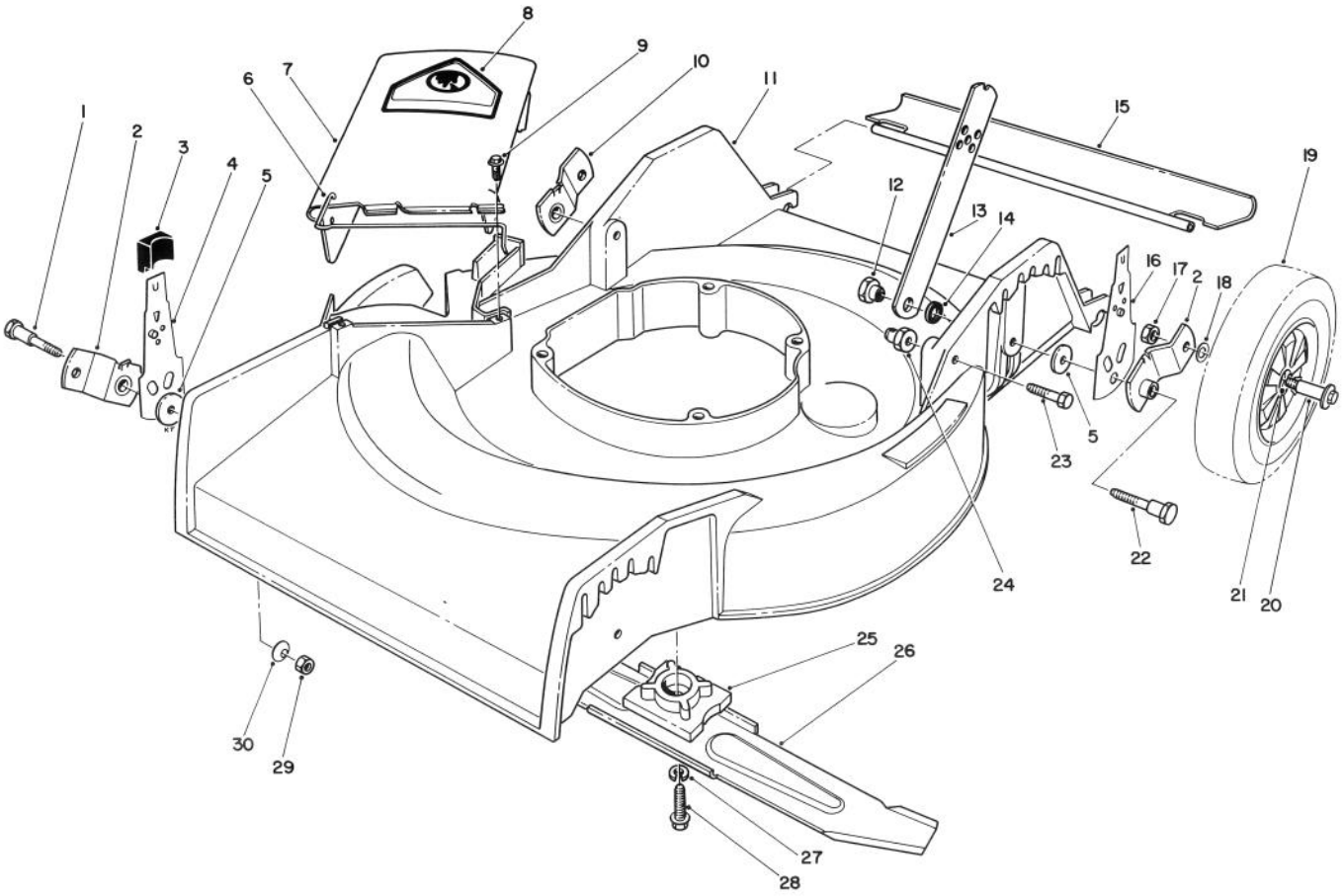

HOUSING ASSEMBLY

Ref. No.	Part No.	Description	No. Used
1	3-0655	Screw — Pivot	2
2	20-2140	Pivot Arm "A"	2
3	25-7740	Knob — Spring Arm	4
4	66-6070	Spring Arm Front — R.H.	1
*	66-6010	Spring Arm — Front L.H.	1
5	33-0390	Washer — Pivot	4
6	20-2640	Hinge — Spring	1
7	27-7817	Deflector Assembly (Incl. Ref. #6 & 8)	1
8	39-5770	Decal — Danger	1
9	46-6811	Screw & Washer Assembly	2
10	20-2130	Pivot Arm "B"	2
11	62-7900	Housing	1
12	27-6520	Nut — Shoulder	2
13	27-7080	Latch — Handle	2
14	3-3287	Spacer — Handle Latch	2
15	66-5990	Shield — Rear	1

Ref. No.	Part No.	Description	No. Used
16	66-6030	Spring Arm — Rear	2
17	52-3620	Locknut	4
18	40-1940	Washer — Wheel Bolt	4
19	27-6200	Wheel & Tire Assembly (Incl. Ref. #21)	4
20	27-6230	Bolt — Wheel	4
21	27-6250	Bushing — Wheel	8
22	28-8880	Screw — Pivot	2
23	322-6	Hex Hd. Capscrew	2
24	12-2080	Nut — Shoulder	2
25	49-7900	Retainer — Blade	1
26	20-2720	Blade	1
27	3253-22	Lockwasher	1
28	26-0671	Screw — Blade	1
29	3296-29	Locknut	2
30	3290-456	Washer — Belleville	2

* Not Illustrated

© The Toro Company — 1988

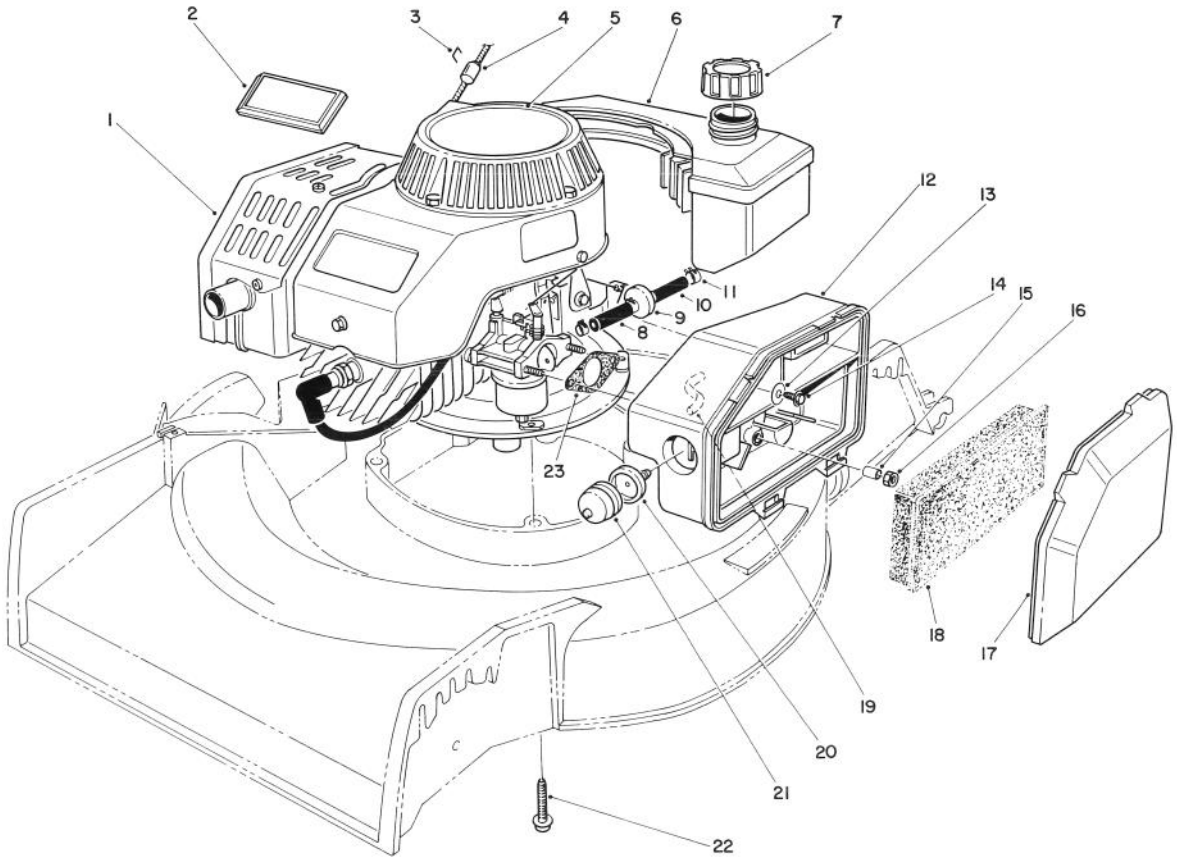

ENGINE ASSEMBLY

Ref. No.	Part No.	Description	No. Used
1	51-0413	Engine — Complete	1
2	46-8290	Plate — Toro Logo	1
3†		Staple	1
4	81-3980	Stop — Rope	1
5	57-9870	Decal — Recoil	1
6	81-0162	Fuel Tank Assembly	1
7	55-3575	Gas Cap Assembly	1
8	51-3216	Line — Fuel	1
9	56-6360	Filter — Fuel	1
10	51-3215	Line — Fuel	1
11	2412-95	Clamp — Fuel Line	4
12	63-9330	Air Cleaner	1

Ref. No.	Part No.	Description	No. Used
13	3256-16	Flat Washer	1
14	51-2690	Hex Washer Hd. Capscrew	1
15	62-3980	Sleeve	2
16	50-7180	Locknut	2
17	63-9340	Cover — Air Cleaner	1
18	63-9380	Foam Element — Air Cleaner	1
19	44-3172	Hose — Primer	1
20	44-2750	Body — Primer	1
21	44-3100	Bulb — Primer	1
22	66-9302	Hex Flange Hd. Capscrew	4
23	81-0090	Gasket	1

† Obtain Locally

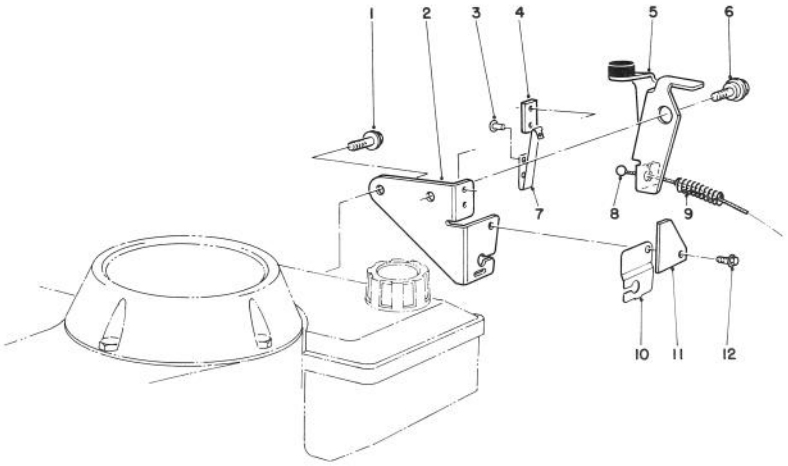

BRAKE ASSEMBLY

Ref. No.	Part No.	Description	No. Used
1	46-0790	Screw — Self Tapping	1
2	53-4620	Plate — Mounting	1
3	3290-459	Rivet	2
4	60-9020	Strap — Insulation	1
5	66-5380	Brake Plate Assembly	1
6	56-6190	Screw — Shoulder, Metric	1
7	60-9010	Strap — Ground	1

Ref. No.	Part No.	Description	No. Used
8	56-6093	Cable — Brake	1
9	66-5370	Spring — Compression	1
10	53-4610	Clamp — Cable	1
11	53-4690	Stop — Ground Strap	1
12	12-5450	Screw — Self Tapping	1
*	12-4599	Mounting Plate Assembly (Incl. Ref. #2-4 & 7)	1

* Not Illustrated

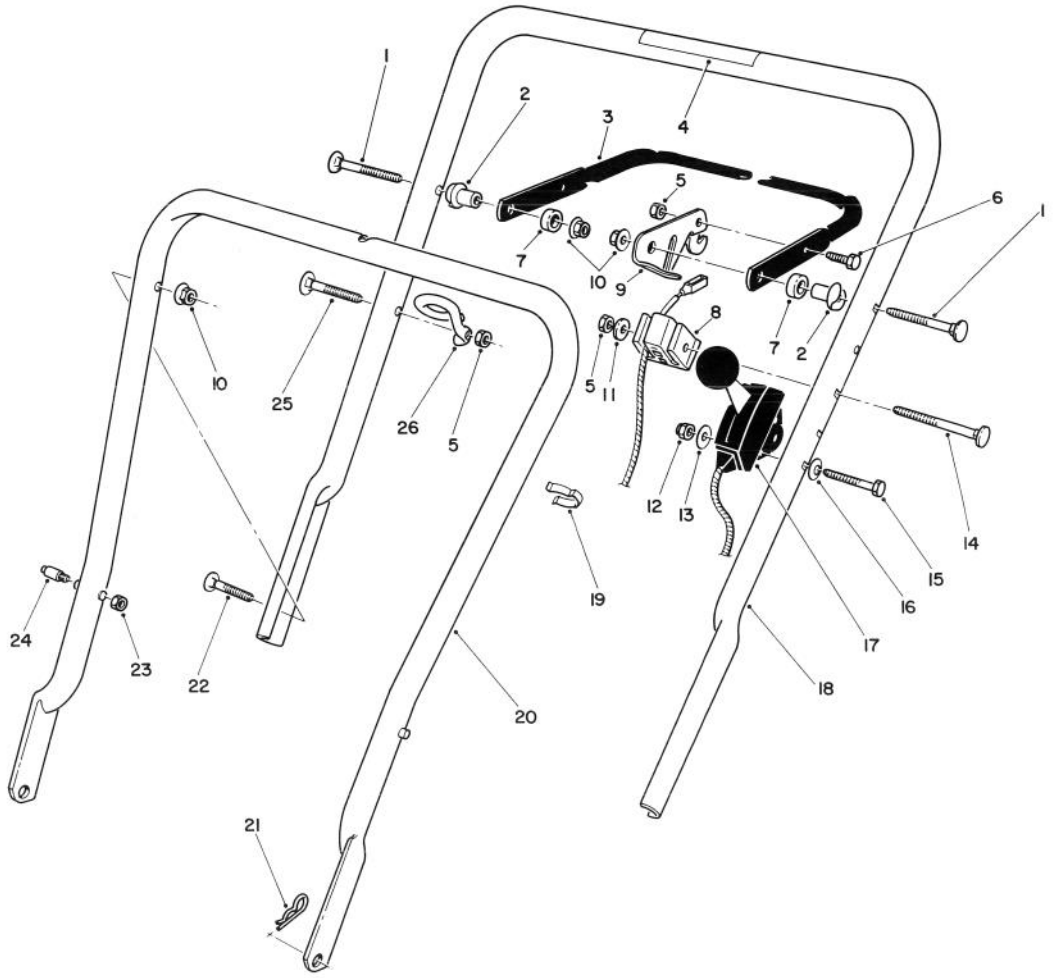

HANDLE ASSEMBLY

Ref. No.	Part No.	Description	No. Used
1	17-9421	Screw — Handle	2
2	49-1630	Support — Spacer	2
3	62-3810	Bar — Control	1
4	56-6280	Decal — Warning	1
5	3296-42	Locknut	3
6	321-3	Hex Hd. Capscrew	1
7	256-276	Spacer — Nylon	2
8	46-6980	Support — Cable	1
9	66-5350	Lever — Control	1
10	3296-58	Nut — Flange Lock	4
11	3256-22	Washer — Flat	1
12	3296-2	Locknut	2
13	3256-14	Washer — Flat	2
14	46-6434	Screw — Handle	1
15	3290-424	Screw — Hex Hd. Machine	2

Ref. No.	Part No.	Description	No. Used
16	57-3150	Washer — Curved	2
17	49-4193	Control — Throttle (Bend Type #1) (Sheath Lg. 35¼") (Wire Lg. 2¼")	1
18	12-5669	Handle — Upper (Incl. Ref. #4)	1
19	218-465	Clip — Cable (Double)	1
20	49-1690	Lower Handle Assembly	1
21	3290-255	Hairpin Cotter	2
22	17-9424	Screw — Handle	2
23†	3296-47	Locknut	2
24†	49-2750	Pin — Handle	2
25	46-6433	Screw — Handle	1
26	46-8080	Guide — Rope	1

† Service Replacement Parts

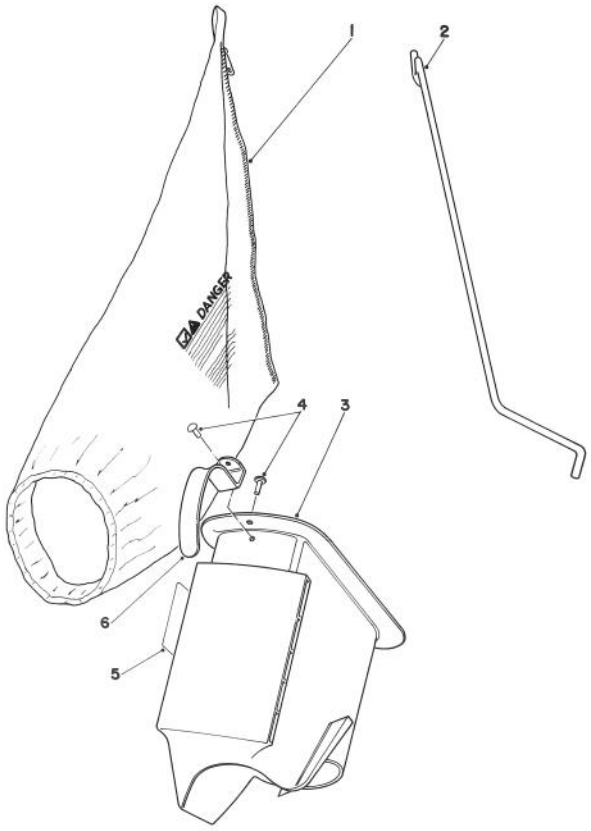

BAGGING KIT NO. 47-6510 (Optional)

Ref. No.	Part No.	Description	No. Used
1	6-0929	Grass Bag	1
2	47-5830	Bag Rod	1
3	6-1089	Grass Chute (Incl. Ref. #4 & 6)	1

Ref. No.	Part No.	Description	No. Used
4	3295-26	Rivet	2
5	36-5230	Decal — Bag Chute	1
6	20-4650	Handle Chute	1

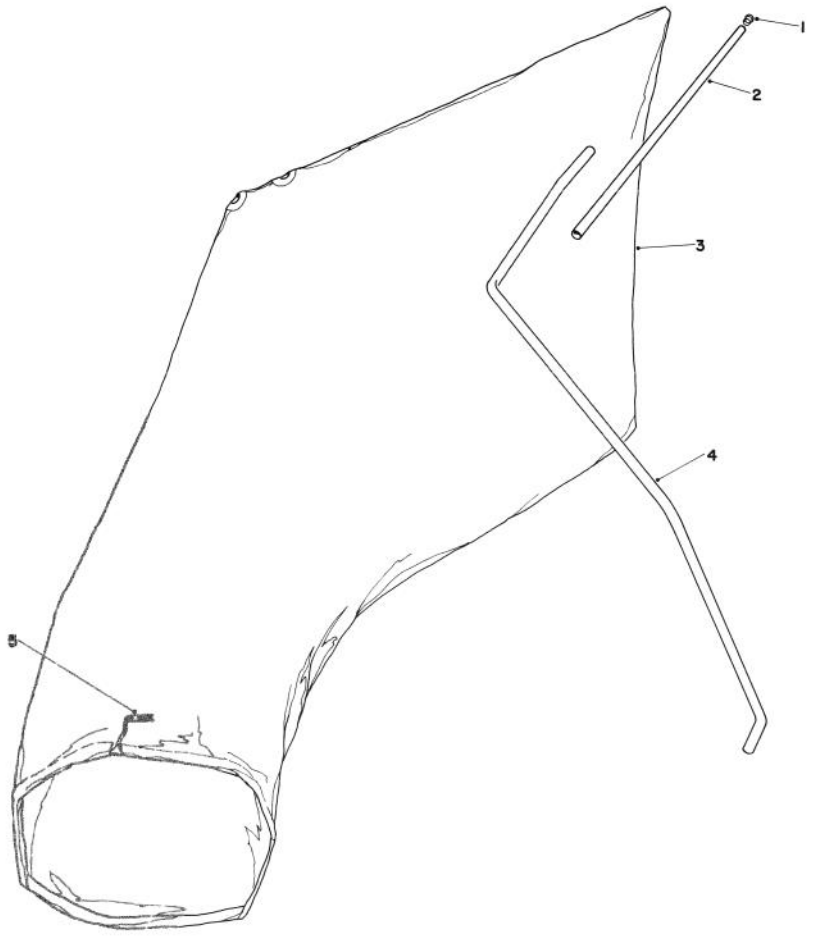

GIANT BAGGING KIT NO. 29-9750 (Optional)

Ref. No.	Part No.	Description	No. Used
1	2410-29	Cap	1
2	29-7000	Tube 25"	1
3	8-4719	Bag (Incl. Ref. #5)	1
4	22-4820	Hanger Rod	1
5	3-2781	Bag Cord Fasteners	1

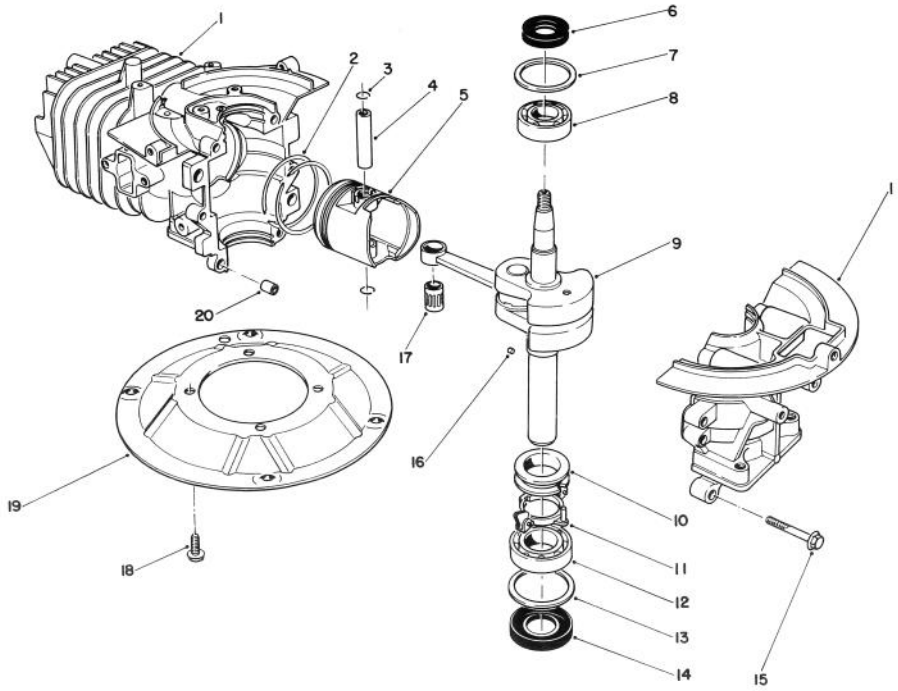

CRANKSHAFT ASSEMBLY
(Model No. 47PH7)

Ref. No.	Part No.	Description	No. Used
1	81-2800	Crankcase/Cylinder Assy.	1
2	81-0590	Ring Set	1
3	81-0620	Circlip	2
4	81-0600	Pin — Wrist	1
5	81-0580	Piston (58 mm)	1
6	81-0720	Oil Seal — Upper	1
7	81-0710	Thrust Washer — Upper	1
8	81-0690	Bearing — Upper (20 mm)	1
9	81-4600	Crankshaft/Connecting Rod Assembly	1
10	81-0770	Spacer — Governor	1

Ref. No.	Part No.	Description	No. Used
11	81-0750	Bracket — Governor Arm	1
12	81-0700	Bearing — Lower (25 mm)	1
13	81-0730	Thrust Washer — Lower	1
14	81-0740	Oil Seal — Lower	1
15	81-0540	Bolt (30 mm Lg.)	6
16	81-0760	Pin — Crankshaft	1
17	81-0610	Bearing — Wrist Pin	1
18	81-0570	Bolt (20 mm Lg.)	4
19	81-0560	Plate — Mounting	1
20	81-0520	Pin — Crankcase	2
*	12-7699	Short Block Assembly	1

* Not Illustrated

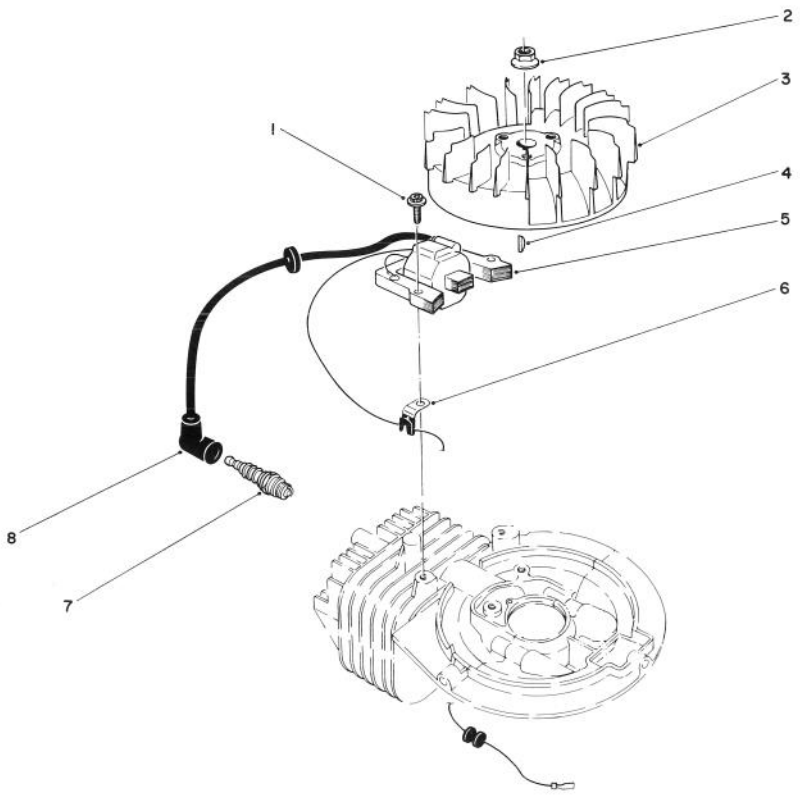

IGNITION ASSEMBLY
(Model No. 47PH7)

Ref. No.	Part No.	Description	No. Used
1	81-2050	Capscrew — Allenhead	2
2	81-1330	Nut	1
3	81-2810	Flywheel — Magneto	1
4	81-2370	Key — Flywheel	1
5	81-2820	Coil/Ignition Assembly	1

Ref. No.	Part No.	Description	No. Used
6	81-1480	Clamp	1
7	81-0181	Spark Plug	1
8	81-1500	Cover — Spark Plug	1
*	41-7650	Puller — Flywheel	1

* Not Illustrated

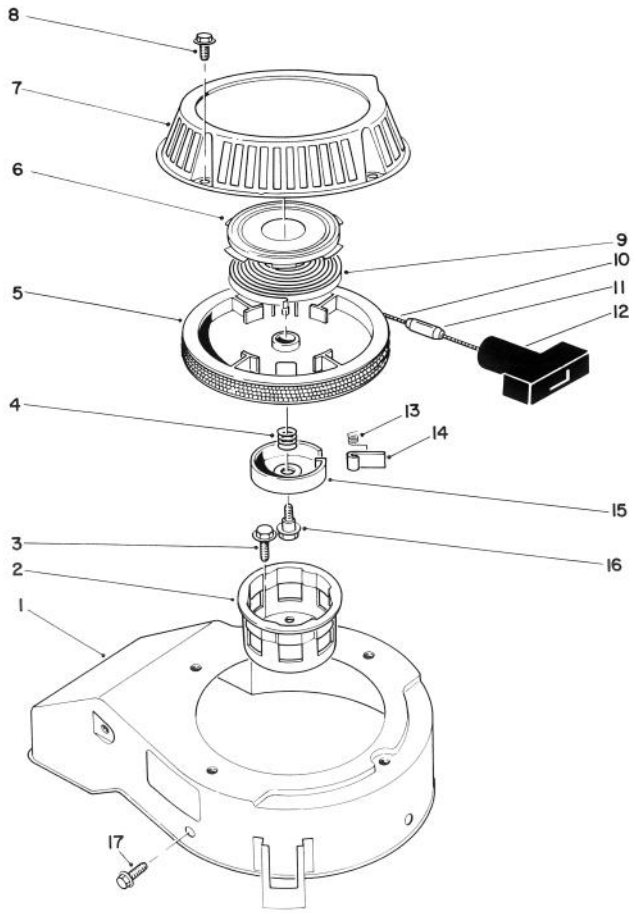

RECOIL ASSEMBLY
(Model No. 47PH7)

Ref. No.	Part No.	Description	No. Used
1	81-2070	Cover — Cooling Fan	1
2	81-1290	Pulley — Starter Cup	1
3	81-1300	Bolt (16 mm Lg.)	3
4	81-1240	Spring — Compression	1
5	81-1210	Reel — Rope Pulley	1
6	81-1640	Retainer Cup — Recoil Spring	1
7	81-2090	Case — Recoil	1
8	81-1280	Bolt	4
9	81-1200	Spring — Recoil	1
10	81-1270	Rope	1
11	81-3980	Stop — Recoil	1

Ref. No.	Part No.	Description	No. Used
12	81-1630	Handle — Recoil	1
13	81-1220	Spring — Dog	1
14	81-1230	Dog	1
15	81-1250	Retainer — Dog	1
16	81-1260	Bolt — Shoulder	1
17	81-1170	Bolt — Self Tapping (15 mm Lg.)	3
*	81-2040	Starter Assembly (Incl. Ref. #4-16)	1
*	81-2300	Spring & Retainer (Incl. Ref. #6 & 9)	1

* Not Illustrated

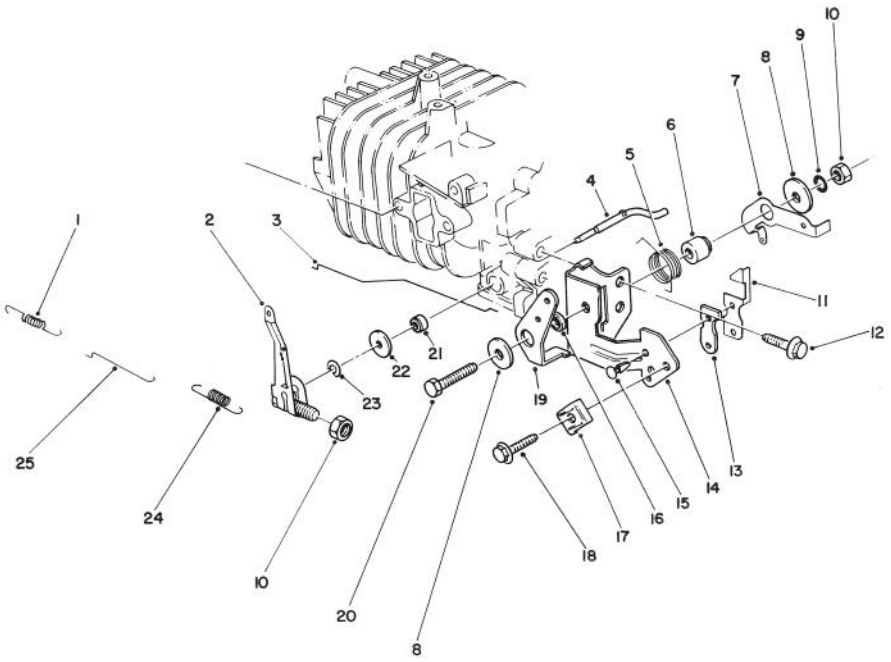

GOVERNOR ASSEMBLY
(Model No. 47PH7)

Ref. No.	Part No.	Description	No. Used
1	81-0920	Spring — Carburetor Rod	1
2	81-5420	Governor Arm/Bolt Assembly	1
3	81-5410	Rod — Choke	1
4	81-0840	Shaft — Governor	1
5	81-2460	Spring — Choke Control Lever	1
6	81-1770	Spacer — Governor Spring Lever	1
7	81-2850	Lever — Governor Spring	1
8	81-1750	Washer — Choke Control Lever	2
9	81-1450	Washer — Lock	1
10	81-0900	Nut	2
11	81-1840	Terminal — Kill Switch	1
12	81-1170	Bolt — Self Tapping (15 mm Lg.)	1

Ref. No.	Part No.	Description	No. Used
13	81-1830	Insulator — Kill Switch	1
14	81-2420	Bracket — Throttle Control	1
15	81-1850	Rivet — Kill Switch	2
16	81-2470	Spacer — Choke Control Lever	1
17	81-2430	Clamp — Cable	1
18	50-0130	Bolt — Cable Clamp	1
19	81-1710	Lever — Choke Control	1
20	81-1730	Bolt — Throttle Control Bracket	1
21	81-0850	Oil Seal — Governor Shaft	1
22	81-0860	Washer	1
23	81-0870	E-Ring	1
24	81-2830	Spring — Governor	1
25	81-0910	Rod — Carburetor	1

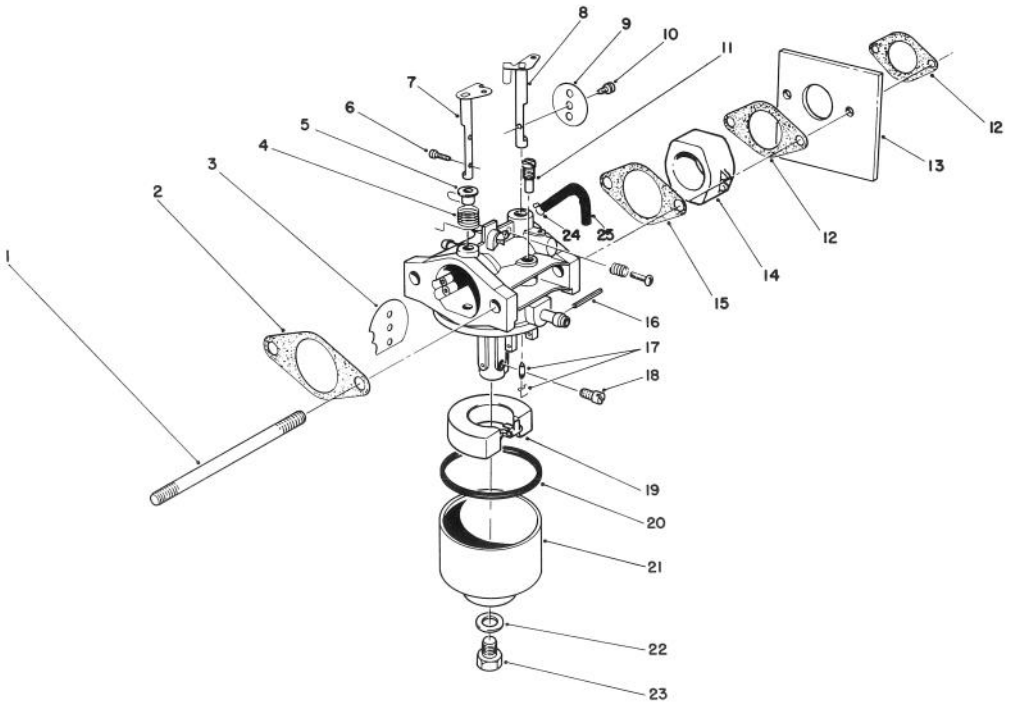

CARBURETOR ASSEMBLY
(Model No. 47PH7)

Ref. No.	Part No.	Description	No. Used
1	81-5450	Stud Bolt — Carburetor	2
2	81-0090	Gasket	1
3	81-0240	Valve — Choke	1
4	81-0230	Spring — Choke	1
5	81-0220	Bushing — Choke Valve	1
6	81-2160	Screw	2
7	81-1950	Shaft — Choke	1
8	81-0250	Shaft — Throttle	1
9	81-0260	Valve — Throttle	1
10	81-0270	Screw — Throttle Valve	1
11	81-1030	Jet — Pilot #(40)	1
12	81-2320	Gasket — Shield	2
13	81-5490	Shield — Carburetor	1
14	81-5440	Insulator — Carburetor	1
15	81-0780	Gasket	1
16	81-0980	Pin	1

Ref. No.	Part No.	Description	No. Used
17	81-4910	Needle Valve/Spring Wire	1
18	81-1060	Jet — Main #(75)	1
*	81-2340	Jet — Main #(72.5) High Alt., Above 6,000 (Optional)	1
19	81-0970	Float	1
20	81-1010	Gasket — Float Bowl	1
21	81-1610	Bowl — Float	1
22	81-1020	Gasket — Bowl Screw	1
23	81-1000	Screw — Bowl	1
*	12-6379	Carburetor Kit (Incl. Ref. #2, 15, 17, 20 & 22)	1
*	81-5430	Carburetor Assembly — Complete	1
24	81-5460	Clamp — Vent Tube	1
25	81-5470	Tube — Vent	1

* Not Illustrated

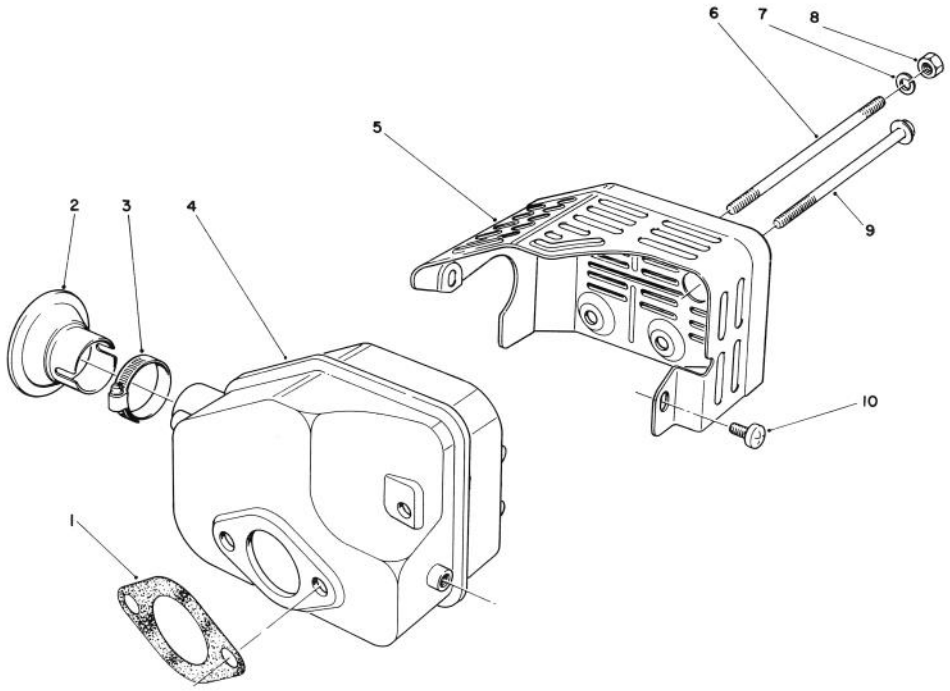

MUFFLER ASSEMBLY
(Model No. 47PH7)

Ref. No.	Part No.	Description	No. Used
1	81-1080	Gasket — Muffler	1
2*	81-0200	Spark Arrester	1
3†		Clamp	1
4	81-1090	Muffler	1
5	81-2450	Cover — Muffler	1

Ref. No.	Part No.	Description	No. Used
6	81-1100	Bolt	2
7	81-1120	Washer — Lock	2
8	81-1110	Nut	2
9	81-1150	Bolt — Self Tapping	1
10	81-1140	Screw — Phillips Hd.	2

* Optional Equipment
† Obtain Locally

LTS-802426