Form No. 3350–334 Rev B

TORO®

# 52″ Side Discharge Mower

## Groundsmaster® 200 Series, 3280D & 3320

**Model No. 30555—Serial No. 240000001 and Up**

## Operator's Manual

CE

English (EN, GB)

# Contents


| | Page |
|---|---|
| Introduction | 2 |
| Safety | 2 |
| Safe Operating Practices | 3 |
| Toro Mower Safety | 4 |
| Safety and Instruction Decals | 5 |
| Specifications | 7 |
| General Specifications | 7 |
| Optional Equipment | 7 |
| Setup | 8 |
| Loose Parts | 8 |
| Installing the Lift Arms | 9 |
| Installing the Carrier Frame | 9 |
| Installing the Cutting Unit | 10 |
| Installing the Weight Transfer Kit | 11 |
| Installing Rear Weight | 13 |
| Before Operating | 13 |
| Adjusting the Height-of-Cut | 13 |
| Adjusting the Rollers | 13 |
| Checking the Lubricant in the Gear Box | 14 |
| Operation | 14 |
| Adjusting the Weight | 14 |
| Using the Grass Deflector | 14 |
| Maintenance | 15 |
| Recommended Maintenance Schedule | 15 |
| Greasing the Bearings and Bushings | 16 |
| Separating Cutting Unit from Traction Unit | 17 |
| Servicing the Bushings in the Castor Arms | 17 |
| Servicing the Castor Wheel and Bearing | 18 |
| Checking for a Bent Blade | 19 |
| Removing the Cutting Blade | 19 |
| Inspecting and Sharpening the Blade | 19 |
| Checking and Correcting Mismatch of Blades | 20 |
| Replacing the Grass Deflector | 21 |
| Adjusting the Idler Pulley | 22 |
| Replacing the Drive Belt | 22 |
| Troubleshooting | 23 |
| The Toro General Commercial Products Warranty | 24 |


# Introduction

Read this manual carefully to learn how to operate and maintain your product properly. The information in this manual can help you and others avoid injury and product damage. Although Toro designs and produces safe products, you are responsible for operating the product properly and safely.

Whenever you need service, genuine Toro parts, or additional information, contact an Authorized Service Dealer or Toro Customer Service and have the model and serial numbers of your product ready. The numbers are stamped into a plate which is located on the carrier frame behind the right front castor wheel.

Write the product model and serial numbers in the space below:

**Model No.** _____

**Serial No.** _____

This manual identifies potential hazards and has special safety messages that help you and others avoid personal injury and even death. ***Danger***, ***Warning***, and ***Caution*** are signal words used to identify the level of hazard. However, regardless of the hazard, be extremely careful.

***Danger*** signals an extreme hazard that *will* cause serious injury or death if you do not follow the recommended precautions.

***Warning*** signals a hazard that *may* cause serious injury or death if you do not follow the recommended precautions.

***Caution*** signals a hazard that may cause minor or moderate injury if you do not follow the recommended precautions.

This manual uses two other words to highlight information. **Important** calls attention to special mechanical information and **Note:** emphasizes general information worthy of special attention.

# Safety

**This machine meets or exceeds CEN standard EN 836:1997, ISO standard 5395:1990, and ANSI B71.4-2004 specifications in effect at the time of production.**

**Improper use or maintenance by the operator or owner can result in injury. To reduce the potential for injury, comply with these safety instructions and always pay attention to the safety alert ⚠ symbol, which means CAUTION, WARNING, or DANGER—"personal safety instruction." Failure to comply with the instruction may result in personal injury or death.**


**© 2004, 2005 by The Toro Company**


**8111 Lyndale Avenue South**
**Bloomington, MN 55420-1196**


All Rights Reserved

Printed in the USA

# Safe Operating Practices

The following instructions are from the CEN standard EN 836:1997, ISO standard 5395:1990, and ANSI B71.4-2004.

## Training

- Read the Operator's Manual and other training material. If the operator(s) or mechanic(s) can not read English it is the owner's responsibility to explain this material to them.
- Become familiar with the safe operation of the equipment, operator controls, and safety signs.
- All operators and mechanics should be trained. The owner is responsible for training the users.
- Never let children or untrained people operate or service the equipment. Local regulations may restrict the age of the operator.
- The owner/user can prevent and is responsible for accidents or injuries occurring to himself or herself, other people or property.

## Preparation

- Evaluate the terrain to determine what accessories and attachments are needed to properly and safely perform the job. Only use accessories and attachments approved by the manufacturer.
- Wear appropriate clothing including hard hat, safety glasses and ear protection. Long hair, loose clothing or jewelry may get tangled in moving parts.
- Inspect the area where the equipment is to be used and remove all objects such as rocks, toys and wire which can be thrown by the machine.
- Use extra care when handling gasoline and other fuels. They are flammable and vapors are explosive.
  - Use only an approved container.
  - Never remove fuel cap or add fuel with engine running. Allow engine to cool before refueling. Do not smoke.
  - Never refuel or drain the machine indoors.
- Check that operator's presence controls, safety switches and shields are attached and functioning properly. Do not operate unless they are functioning properly.

## Operation

- Never run an engine in an enclosed area.
- Only operate in good light, keeping away from holes and hidden hazards.
- Be sure all drives are in neutral and parking brake is engaged before starting engine. Only start engine from the operator's position. Use seat belts if provided.
- Slow down and use extra care on hillsides. Be sure to travel in the recommended direction on hillsides. Turf conditions can affect the machine's stability. Use caution while operating near drop-offs.
- Slow down and use caution when making turns and when changing directions on slopes.
- Never raise deck with the blades running.
- Never operate with guards not securely in place. Be sure all interlocks are attached, adjusted properly, and functioning property.
- Do not change the engine governor setting or overspeed the engine.
- Stop on level ground, lower the cutting units, disengage drives, engage parking brake (if provided), shut off engine before leaving the operator's position for any reason.
- Stop equipment and inspect the blades after striking objects or if an abnormal vibration occurs. Make necessary repairs before resuming operations.
- Keep hands and feet away from the cutting units.
- Look behind and down before backing up to be sure of a clear path.
- Never carry passengers and keep pets and bystanders away.
- Slow down and use caution when making turns and crossing roads and sidewalks. Stop blades if not mowing.
- Do not operate the mower under the influence of alcohol or drugs.
- Use care when loading or unloading the machine into a trailer or truck.
- Use care when approaching blind corners, shrubs, trees, or other objects that may obscure vision.
- The operator shall turn on flashing warning lights, if provided, whenever traveling on a public road, except where such use is prohibited by law.

## Maintenance and Storage

- Disengage drives, lower the cutting units, move traction pedal to Neutral, set parking brake, stop engine and remove key and disconnect spark plug wire. Wait for all movement to stop before adjusting, cleaning or repairing.
- Clean grass and debris from cutting units, drives, mufflers, and engine to help prevent fires. Clean up oil or fuel spillage.

- Let engine cool before storing and do not store near flame.
- Shut off fuel while storing or transporting. Do not store fuel near flames or drain indoors.
- Park machine on level ground. Never allow untrained personnel to service machine.
- Use jack stands to support components when required.
- Carefully release pressure from components with stored energy.
- Disconnect battery or remove spark plug wire before making any repairs. Disconnect the negative terminal first and the positive last. Reconnect positive first and negative last.
- Use care when checking blades. Wrap the blades or wear gloves, and use caution when servicing them. Only replace blades. Never straighten or weld them.
- Keep hands and feet away from moving parts. If possible, do not make adjustments with the engine running.
- Charge batteries in an open well ventilated area, away from spark and flames. Unplug charger before connecting or disconnecting from battery. Wear protective clothing and use insulated tools.
- Keep all parts in good working condition and all hardware tightened. Replace all worn or damaged decals.

# Toro Mower Safety

The following list contains safety information specific to Toro products or other safety information that you must know that is not included in the ANSI standards.

This product is capable of amputating hands and feet and throwing objects. Always follow all safety instructions to avoid serious injury or death.

Use of this product for purposes other than its intended use could prove dangerous to user and bystanders.

## Operation

- Know how to stop the machine and engine quickly.
- Always wear substantial shoes. Do not operate the machine while wearing sandals, tennis shoes, or sneakers.
- Wearing safety shoes and long pants is advisable and required by some local ordinances and insurance regulations.
- Fill fuel tank until level is 1 in. (25 mm) below the bottom of the filler neck. Do not overfill.
- Check the safety interlock switches daily for proper operation. If a switch should fail, replace the switch before operating the machine. After every two years, replace all three interlock switches in the safety system, **regardless** if they are working properly or not.
- Pay attention when using the machine. To prevent loss of control:
  - Do not drive close to sand traps, ditches, creeks, or other hazards.
  - Avoid sudden stops and starts.
  - Watch for traffic when near or crossing roads. Always yield the right-of-way.
  - Lower the cutting unit when going down slopes.
- The grass deflector must always be installed and in the lowest position on the side discharge cutting unit. Never operate the mower without the deflector or entire grass collector.
- If the cutting unit discharge area ever plugs, shut the engine off before removing the obstruction.
- Cut grass slopes carefully. Do not start, stop, or turn suddenly.
- Do not touch the engine or muffler while the engine is running or soon after it has stopped because these areas could be hot enough to cause burns.

## Maintenance and Storage

- Check the blade mounting bolts frequently to be sure that they are tightened to specification.
- Make sure that all hydraulic line connectors are tight and all hydraulic hoses and lines are in good condition before applying pressure to the system.
- Keep your body and hands away from pin hole leaks or nozzles that eject hydraulic fluid under high pressure. Use paper or cardboard, not your hands, to search for leaks. Hydraulic fluid escaping under pressure can have sufficient force to penetrate the skin and cause serious injury.
- Before disconnecting or performing any work on the hydraulic system, all pressure in the system must be relieved by stopping the engine and lowering the cutting units to the ground.
- If the engine must be running to perform a maintenance adjustment, keep hands, feet, clothing, and any parts of the body away from the cutting units, attachments, and any moving parts. Keep everyone away.
- Do not overspeed the engine by changing governor settings. To ensure safety and accuracy, have an Authorized Toro Distributor check the maximum engine speed with a tachometer.

- The engine must be shut off before checking the oil or adding oil to the crankcase.
- Make sure that the mower fuel tank is empty if the machine is to be stored in excess of 30 days. Do not store the mower near any open flame or where gasoline fumes may be ignited by a spark.
- Perform only those maintenance instructions described in this manual. If major repairs are ever needed or if assistance is desired, contact an Authorized Toro Distributor.
- To make sure of optimum performance and continued safety certification of the machine, use only genuine Toro replacement parts and accessories. Replacement parts and accessories made by other manufacturers could be dangerous, and such use could void the product warranty.

## Safety and Instruction Decals

Safety decals and instructions are easily visible to the operator and are located near any area of potential danger. Replace any decal that is damaged or lost.

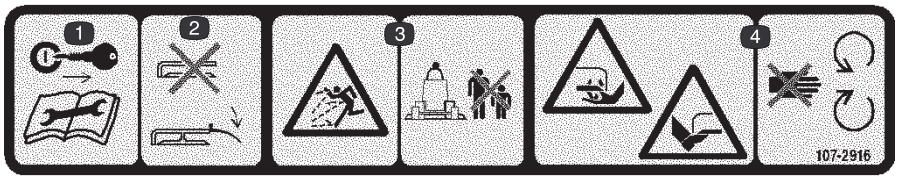


**107-2916**

1. Remove the ignition key and read the instructions before servicing or performing maintenance.
2. Do not operate the mower with the deflector up or removed; keep the deflector in place.
3. Thrown object hazard—keep bystanders a safe distance from the machine.
4. Cutting/dismemberment hazard of hand or foot, mower blade—stay away from moving parts

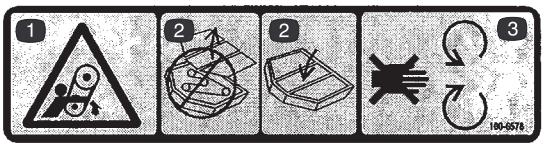


**100-6578**

1. Warning—hand and arm entanglement.
2. Keep the deck covers in place.
3. Stay away from moving parts.

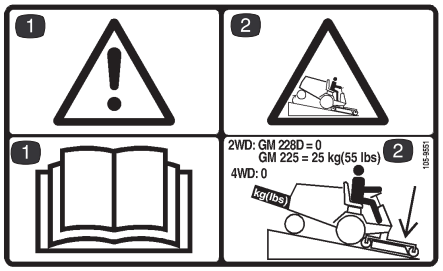


**105–9551**

1. Warning—read the operator's manual.
2. Lower the cutting deck when going down slopes. GM 225 units need 25 kg (55 lb.) of rear weight. GM 228D and four-wheel drive units do not need any rear weight.

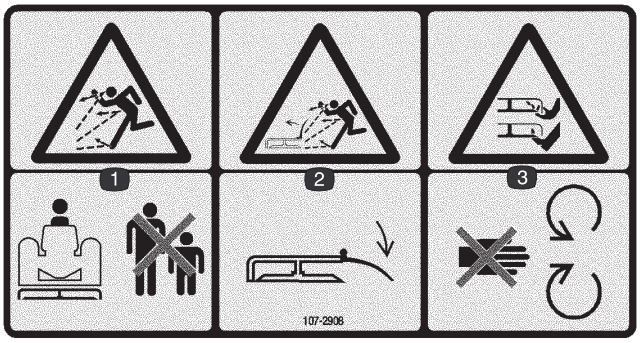


**107-2908**

1. Thrown object hazard—keep bystanders a safe distance from the machine.
2. Thrown object hazard, mower—keep the deflector in place.
3. Cutting/dismemberment hazard of hand or foot, mower blade—stay away from moving parts.

---




**43-8480**

---

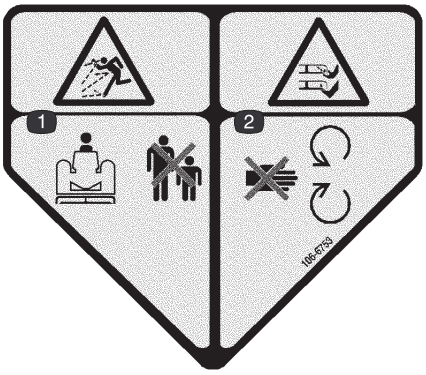


**106-6753**

1. Thrown object hazard—keep bystanders a safe distance from the machine.
2. Cutting/dismemberment hazard of hand or foot, mower blade—stay away from moving parts.

---

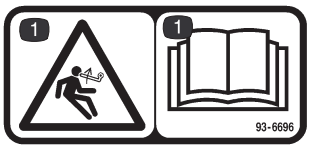


**93-6696**

1. Warning—the spring is under tension. Read the operator's manual.

---

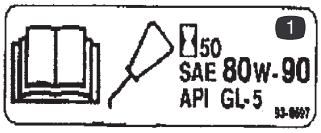


**93-6697**

1. Read the operator's manual for further information on lubrication.

---




**107-2915**

1. Entanglement hazard, shaft—keep bystanders a safe distance from the machine.

---

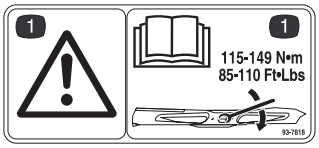


**93-7818**

1. Warning—read the operator's manual for further information on torquing the blade bolt.

---

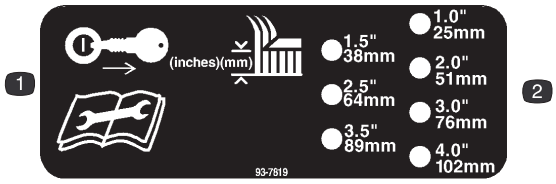


**93-7819**

1. Remove the ignition key before changing the height-of-cut.
2. Height-of-cut

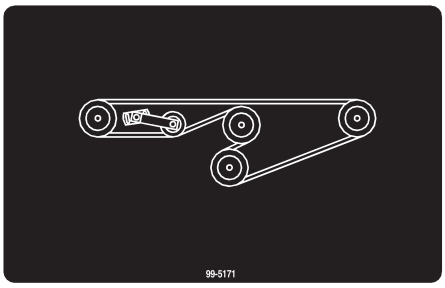


**99–5171**

# Specifications

## General Specifications

| | |
|---|---|
| Width of Cut | 51-3/4 in. (1.314 m) |
| Height of Cut | Adjustable from 1 to 4 in. (25 to 102 mm) in 1/2 inch (13 mm) increments |
| Blade Tip Speed | 15,525 ft./min. @ 3250 engine RPM |
| Cutting Blades | 3 heat-treated steel blades, each 3/16 in. (4.8 mm) thick and 18 in. (457 mm) long |
| Pneumatic Wheels | 8 in. (203 mm) diameter greaseable roller bearings (inflated to 20–30 psi [138–207 kPa]) |
| Drive System | PTO driven gear box transmits power through a “AA” section belt to all blade spindles. |

**Note:** Specifications and design subject to change without notice.

## Optional Equipment

| | |
|---|---|
| Rear Weight Kit | Part No. 24-5780 |
| High Sail Blade | Part No. 44-5480 |
| Extra High Sail Blade | Part No. 56-2390 |
| Atomic Blade | Part No. 104–1301 |
| Grass Collection System | |
| Blower Kit | Model No. 30502 |
| Phenolic Castor Wheels | Part No. 27-1050 |
| use with Spanner **or** | Part No. 69-8980 |
| Castor Fork and | Part No. 40-0370 |
| 3/4 in. Bolts | Part No. 328-9 |

# Setup

## Loose Parts

**Note:** Use this chart as a checklist to ensure that all parts have been received. Without these parts, total setup cannot be completed.

| Description | Qty. | Use |
|---|---|---|
| Right-hand lift arm | 1 | Mount to traction unit pivot brackets |
| Left-hand lift arm | 1 | |
| Spacer | 4 | |
| Pivot pin assembly | 2 | |
| Cotter pin, 5/32 in. x 1-3/4 in. | 2 | |
| Rear cradle | 2 | Mount to lift arms |
| Spacer | 2 | |
| Capscrew, 3/8 x 2 in. | 6 | |
| Flange nut, 3/8 in. | 6 | |
| Capscrew, 1/2 x 1-1/2 in. | 6 | Mount to lift arms |
| Mounting bracket | 1 | Mounting the weight transfer kit (Note required on the GM 3280–D or GM 3320) |
| Lock pin assembly | 2 | |
| Self-tapping screw | 2 | |
| Spring cover assembly | 2 | |
| Clevis pin | 1 | |
| Hairpin cotter | 1 | |
| Spring end—top | 1 | |
| Heavy extension spring | 1 | |
| Lower spring end | 1 | |
| Knee link | 1 | |
| Capscrew, 3/8 x 1 in. | 2 | |
| Shoulder bolt | 2 | |
| Flat washer | 2 | |
| Locknut, 3/8 in. | 2 | |
| Decal | 1 | Apply for CE. |
| Cushion shim | 3 | Level rubber cushions on cutting deck |
| Parts Catalog | 1 | |
| Operator's Manual | 1 | Read before operating the machine. |

**Danger**

**If the engine is started and the PTO shaft is allowed to rotate, serious injury could result.**

**Do not start the engine and engage the PTO lever when the PTO shaft is not connected to the gear box on the cutting unit.**

**Note:** Determine the left and right sides of the machine from the normal operating position.

## Installing the Lift Arms

1. On one side of the traction unit, loosen (do not remove) the wheel nuts securing the wheel and tire assembly to the front wheel studs.
2. Jack up the machine until the front wheel is off of the floor. Use jack stands or block the machine to prevent it from accidentally falling.
3. Remove the wheel nuts and slide the wheel and tire assembly off of the studs.
4. Mount a lift arm to the pivot bracket with 2 spacers, a pivot pin, and a cotter pin (5/32 x 1-3/4 in.). Mount the lift arm with the bend positioned outward (Fig. 1).

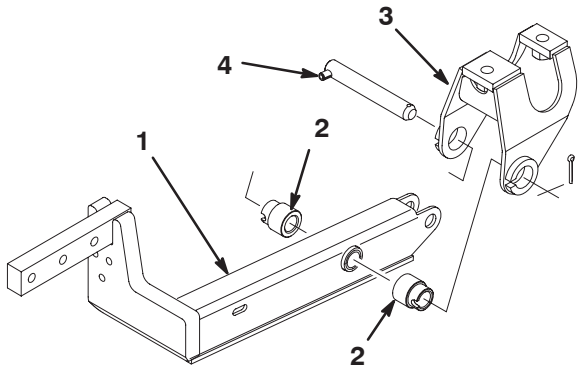


**Figure 1**

1. Lift arm
2. Spacer (2)
3. Pivot bracket
4. Pivot pin

5. Mount the rear of the lift arm to the lift cylinder with a pivot pin and 2 cotter pins (supplied with the traction unit) (Fig. 2).

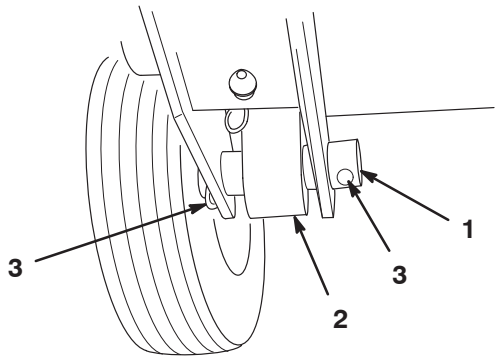


**Figure 2**

1. Cylinder pin
2. Cylinder end
3. Cotter pin

6. Remove the cotter pins from the clevis pins holding the brake struts and yokes together, and discard the cotter pins. Keeping the clevis pin in place, install the short end of the spring into the hole in the clevis pin to retain the parts together. Connect the other end of the springs to the slotted holes in the lift arms (Fig. 3).

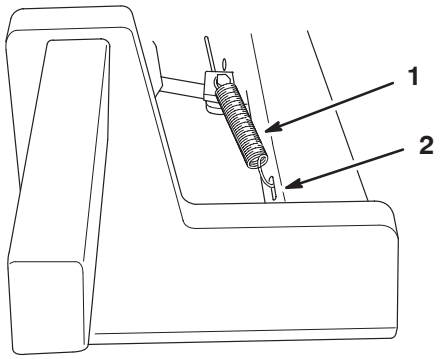


**Figure 3**

1. Brake return spring
2. Slotted hole

7. Repeat the procedure on the opposite side of the machine.

## Installing the Carrier Frame

**Note:** Grease the castor wheel shaft with No. 2 grease after installing and after initial operation of the machine.

1. Carrier frame is shipped upside down. Turn frame over before installation.

2. Remove the lynch pin and 2 thrust washers shipped on each castor wheel assembly. Leave 2 thrust washers on each shaft, insert the shafts into the frame mounting tube, and install the thrust washers and lynch pin (Fig. 4).

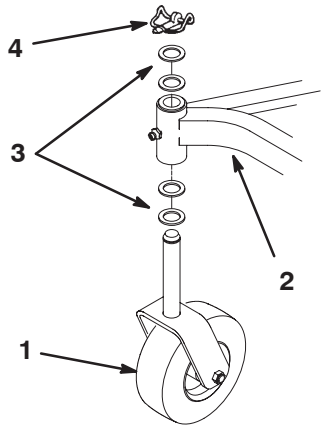


**Figure 4**

1. Castor wheel assembly
2. Carrier frame
3. Thrust washers
4. Lynch pin

3. Mount a rear cradle to each lift arm with 3 capscrews (3/8 x 2 in.), spacers, and flange nuts as shown in Figure 5.

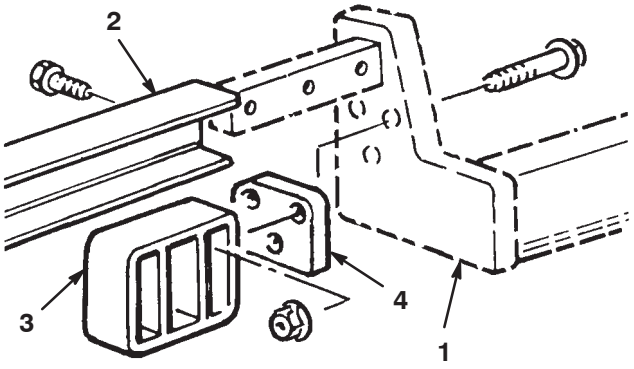


**Figure 5**

1. Lift arm
2. Carrier frame
3. Rear cradle
4. Spacer

**Note:** If the rear cradle mounting holes are not in the lift arms, use the dimensions shown in Figure 6 to locate, mark, and drill the 3 holes (13/32 in. diameter) required in each lift arm.

4. Slide the carrier frame onto the lift arms aligning the mounting holes. Secure each side of the carrier frame to the lift arms with 3 capscrews (1/2 x 1-1/2 in.). Torque the capscrews to 70–80 ft.-lb. (95–108 N·m) (Fig. 6).

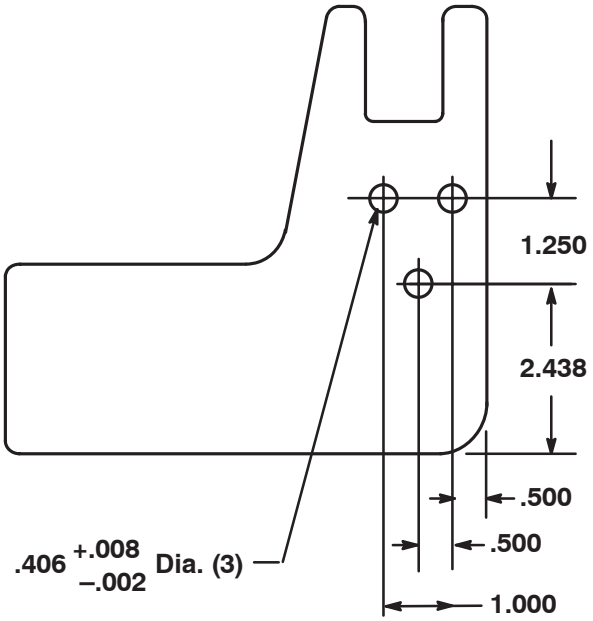


**Figure 6**

# Installing the Cutting Unit

1. Make sure that the PTO shaft on the traction unit clears the cutting unit frame, engage the parking brake, put the traction pedal in neutral, the PTO lever in the Off position, start the engine, and raise the frame.
2. Stop engine and slide the cutting unit under the frame.
3. Remove the 2 capscrews and lock washers securing the PTO guard mounting brackets to the gear box (Fig. 7). Retain the fasteners for future installation.

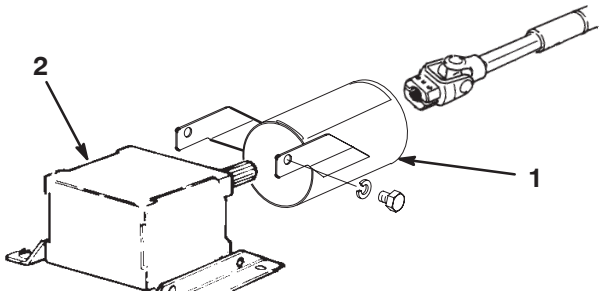


**Figure 7**

1. PTO guard
2. Gear box

4. Slide the PTO shaft guard onto the PTO shaft, positioning the guard as shown in Figure 7.
5. Slide the male PTO shaft into the female PTO shaft. Align the gear case input shaft with the PTO shaft and slide them together. Secure them with the roll pin and tighten the bolts and locknuts.

6. Attach the PTO shaft guard to the gear box with the 2 capscrews and lock washers previously removed.

7. Lower the carrier frame and install 4 clevis pins through the desired height-of-cut bracket holes and frame brackets. Secure all 4 pins with hairpin cotters (Fig. 8).

**Note:** On the GM 3280–D and 3320 the engine must be started to lower the carrier frame.

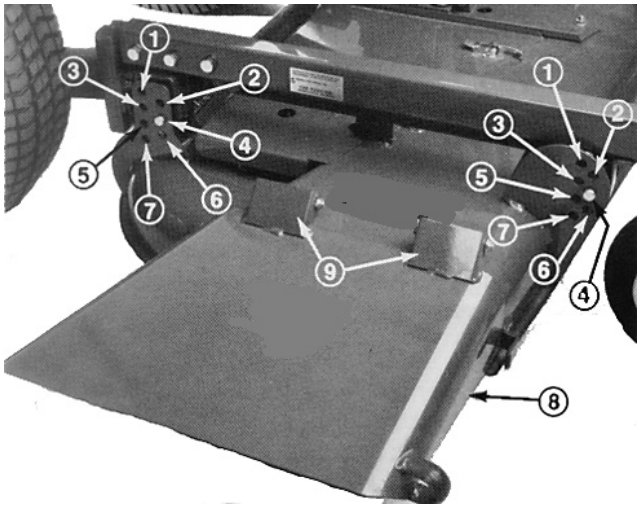

**Figure 8**

1. 1 in. (25 mm)
2. 1-1/2 in. (38 mm)
3. 2 in. (51 mm)
4. 2-1/2 in. (64 mm)
5. 3 in. (76 mm)
6. 3-1/2 in. (89 mm)
7. 4 in. (102 mm)
8. Grass deflector
9. Spring hinges

# Installing the Weight Transfer Kit

**Note:** The Weight Transfer Kit is only required on the GM 200 Series traction units only. Do not install the Weight Transfer Kit on a GM 3280–D or GM 3320 but set the traction unit counterbalance pressure to 100 p.s.i. Refer to the traction unit Operator's Manual for the adjustment procedure.

1. Fully raise the cutting deck, set the parking brake, rotate the ignition key to Off, and remove the ignition key.

2. Move lift lock lever to the lock position.

**Note:** Lift lock lever is located on right front corner of the seat frame.

3. Place blocks under the cutting deck to prevent it from falling during assembly.

**Note:** The mounting brackets for the weight transfer kit must be installed in different locations depending on the cutting deck. Refer to Figure 9 for mounting location.

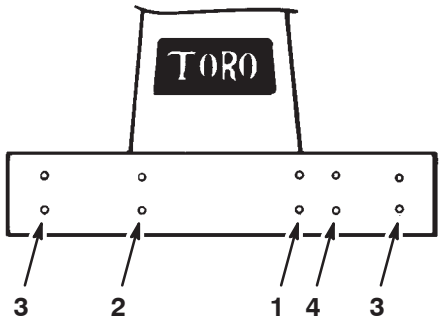


**Figure 9**

1. 52″ side discharge deck
2. 52″ deck w/bagger
3. 62″ and 72″ decks
4. 52″ rear discharge deck

4. To install the mounting brackets, insert 2 flange head capscrews (3/8 x 1 in.) through the slotted bracket holes. Thread the screws into the captivated frame nuts and torque them to 45–50 ft.-lb. (61–68 N·m) (Fig. 10).

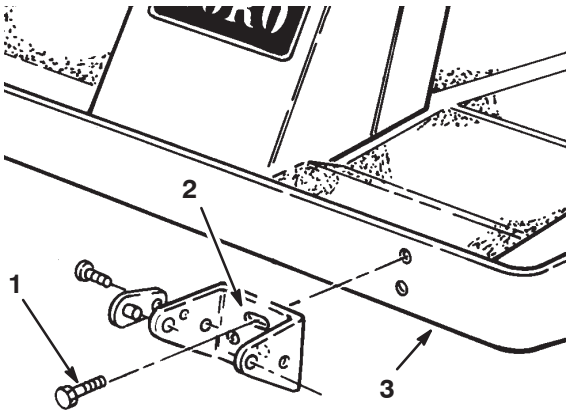


**Figure 10**

1. Flange head capscrew
2. Slotted hole
3. Frame

**5.** Thread the top extension spring coil into the top spring end holes and the bottom extension spring coil into the bottom spring end holes (Fig. 11).

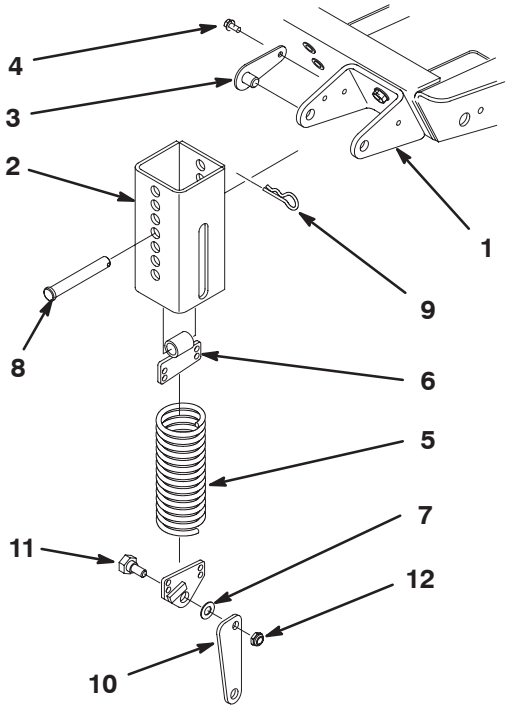


**Figure 11**

1. Mounting bracket
2. Spring cover
3. Lock pin assembly
4. Self-tapping screw
5. Extension spring
6. Top spring end
7. Bottom spring end
8. Clevis pin
9. Hairpin cotter
10. Knee link
11. Shoulder bolt
12. Locknut (2)

**6.** Mount the knee link to the lower spring end with the wide part of the knee link pointing forward and the spring end stop pointing forward. Secure the knee link to the outer side of the spring end (Fig. 13) with a shoulder bolt and locknut (Fig. 11 and 12).

**Important** The knee link must be assembled pointing in the proper direction or the spring will not pivot correctly when the deck is raised.

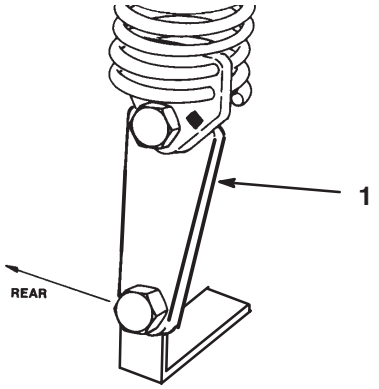


**Figure 12**

1. Wide part of knee link

**7.** Mount the bottom of the knee link to the deck bracket with a shoulder bolt and locknut.

**8.** Align the slotted holes in the spring cover (slot toward the bottom) with the mounting bracket holes. Insert the lock pin assemblies into the bracket holes and secure each to the bracket with self-tapping screws (Fig. 11). Torque the screws to 20 ft.-lb. (27 N·m).

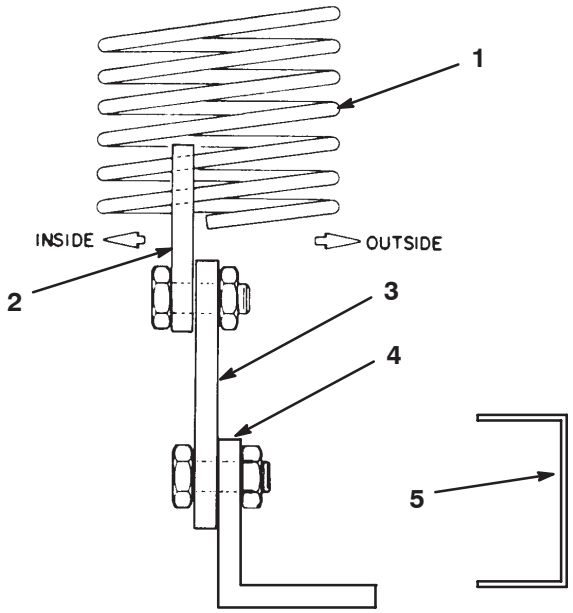


**Figure 13**

1. Weight transfer spring
2. Spring end plate
3. Knee link bracket
4. Deck bracket
5. Deck frame

**9.** From the bottom, insert the spring and top spring end into the spring cover. Select a hole that matches the cutter deck height-of-cut setting; i.e., the top cover hole matches the highest height setting, the bottom cover hole the lowest, etc. Align the top spring end hole with

the selected spring cover holes and insert the clevis pin to secure the spring inside the cover (Fig. 11). Secure the clevis pin with a hairpin cotter.

**10.** Remove the blocks from under the cutting unit. Make the final counterbalance adjustments under actual cutting conditions; refer to Adjusting the Tension Spring, page 14.

**11.** Check to make sure that the front height-of-cut pins are resting properly on the frame cushions (Fig. 14). If the pins are not resting properly, place a shim or shims under the cushion to raise it for proper alignment.

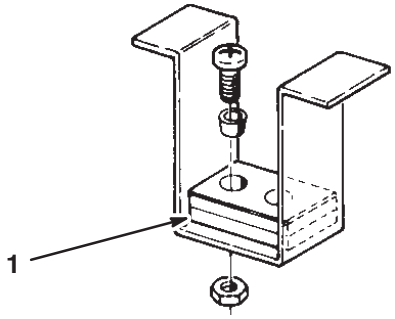


**Figure 14**

1. Frame cushions

## Installing Rear Weight

Two Wheel Drive Groundsmaster 200 Series, 3280–D and 3320 traction units comply with the ANSI B71.4-2004 Standard when equipped with rear weight. Refer to the chart in the traction unit Operator's Manual to determine the combinations of weight required. Order the parts from your local Authorized Toro Distributor.

Four Wheel Drive Groundsmaster 200 Series and 3280–D traction units do not need additional rear weight to comply with the ANSI B71.4-2004 Standard.

# Before Operating

## Adjusting the Height-of-Cut

The height-of-cut is adjustable from 1 to 4 inches (25 to 102 mm) in 1/2 inch (13 mm) increments by relocating 4 clevis pins in different hole locations (Fig. 15).

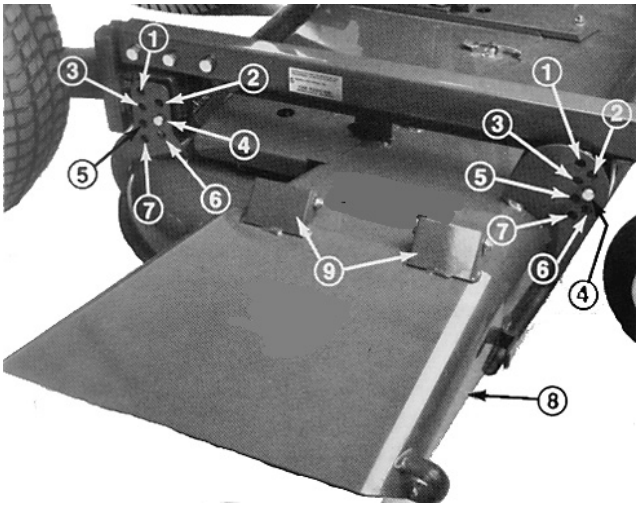


**Figure 15**

1. 1 in. (25 mm)
2. 1-1/2 in. (38 mm)
3. 2 in. (51 mm)
4. 2-1/2 in. (64 mm)
5. 3 in. (76 mm)
6. 3-1/2 in. (89 mm)
7. 4 in. (102 mm)
8. Grass deflector
9. Spring hinges

**Note:** All 4 pins should be in identical hole locations to prevent any operating and cutting difficulties.

## Adjusting the Rollers

**Note:** If the cutting unit is to be used in the 1 in. (25 mm) or 1-1/2 in. (38 mm) height-of-cut setting, the rear cutting unit rollers must be repositioned in the top bracket holes.

**1.** Remove the cotter pins securing the roller shafts to the underside of the deck.

**2.** Slide the shafts out of the lower bracket holes, align the rollers with the top holes, and install the shafts.

**3.** Install the cotter pins to secure the assemblies.

## the Checking the Lubricant in the Gear Box

The gear box is designed to operate on SAE 80–90 wt. gear lube. Although the gear box is shipped with lubricant from the factory, check the level before operating the cutting unit.

1. Position the machine and cutting unit on a level surface.
2. Remove the dipstick/fill plug from the top of the gear box (Fig. 16) and make sure that the lubricant is between the marks on the dipstick. If the lubricant level is low, add enough lubricant until the level is between the marks.

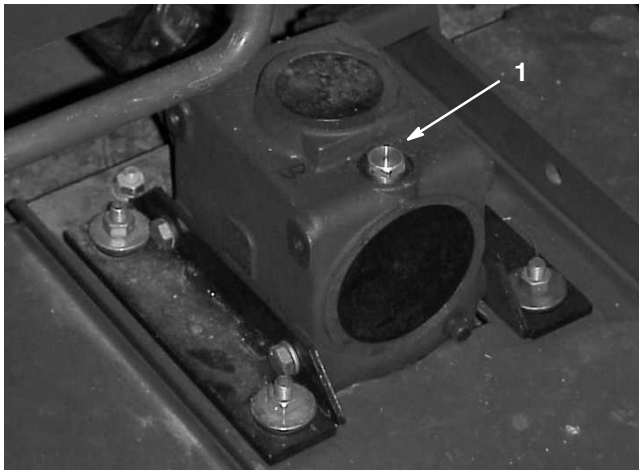


**Figure 16**

1. Dipstick/fill plug

# Operation

**Note:** Determine the left and right sides of the machine from the normal operating position.

## Adjusting the Weight Transfer

For best performance, the cutting unit bounce on uneven turf is minimal and it does not ride heavily over flat terrain. If scalping occurs or the cut is uneven from side to side, there may too much weight on the deck and weight may have to be transferred to the traction unit.

By contrast, if too much weight is transferred to the traction unit, the deck will bounce excessively and the cut will be uneven. If the cutting unit does not perform properly, adjust the weight transfer as follows:

Groundsmaster 200 series only

- Stop the machine on a level surface, set the parking brake, fully raise the cutting unit, turn the ignition key to Off, and remove the key.
- Remove the hairpin cotter from the clevis pin securing the spring end to the spring cover and remove the clevis pin. Align the top spring end hole with the new hole selected in the spring cover, insert the clevis pin, and secure it with the hairpin cotter.
- Resume operations. If further adjustments are required, repeat the procedure.

Groundsmaster 3280–D and 3320 only

- Refer to the traction unit Operator's Manual for the procedure to adjust the counterbalance pressure for best performance.

## Using the Grass Deflector

**Danger**

**Without the grass deflector mounted in place, you and others are exposed to blade contact and thrown debris. Contact with the rotating mower blade(s) and thrown debris will cause injury or death.**

- **Never remove the grass deflector from the mower because the grass deflector routes material down toward the turf. If the grass deflector is ever damaged, replace it immediately.**
- **Never put your hands or feet under the mower.**
- **Never operate the mower with the deflector removed from the cutting unit or tied/blocked in a raised position.**

**Note:** The deflector is spring loaded into its downward normal operating position (Fig. 15), but the operator can temporarily swing it out of the way to facilitate loading in a trailer or when otherwise necessary.

# Maintenance

**Note:** Determine the left and right sides of the machine from the normal operating position.

## Recommended Maintenance Schedule

| Maintenance Service Interval | Maintenance Procedure |
|---|---|
| After first 2 hours | • Tighten the castor wheel nuts. |
| After first 10 hours | • Tighten the castor wheel nuts.<br>• Torque the blade bolts. |
| Daily | • Check the blades.<br>• Lubricate the castor arm bushings.<br>• Lubricate the castor wheel bearings. |
| Every 50 hours | • Tighten the castor wheel nuts.<br>• Torque the blade bolts.<br>• Lubricate the grease fittings.<br>• Clean under the cutting unit belt covers.<br>• Check the blade drive belt adjustment.<br>• Check the gear box oil level. |
| Every 400 hours | • Change the gear box oil. |

**Caution**

**On the Groundsmaster 200 Series, the counterbalance spring is in tension when the deck is in the lowered position.**

**Always raise the deck before adjusting or removing the spring.**

# Greasing the Bearings and Bushings

The cutting unit must be lubricated regularly. If the machine is operated under normal conditions, lubricate the castor bearings and bushings with No. 2 general purpose lithium base grease or molybdenum base grease after every 8 hours of operation or daily, whichever comes first. All other bearings, bushings, and the gear box must be lubricated after every 50 hours of operation.

**1.** Lubricate the following areas:

- castor spindle bushings (Fig. 17)
- castor wheel bearings (Fig. 17)
- right and left lift arm pivot pins (Fig. 18)
- blade spindle bearings (Fig. 19)

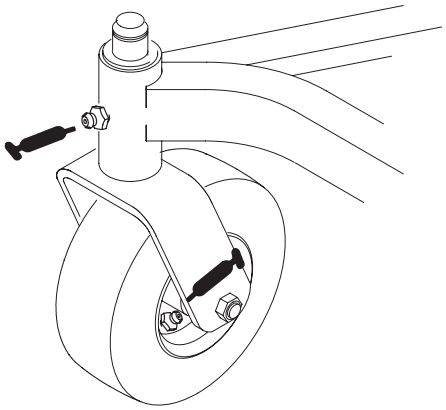

**Figure 17**

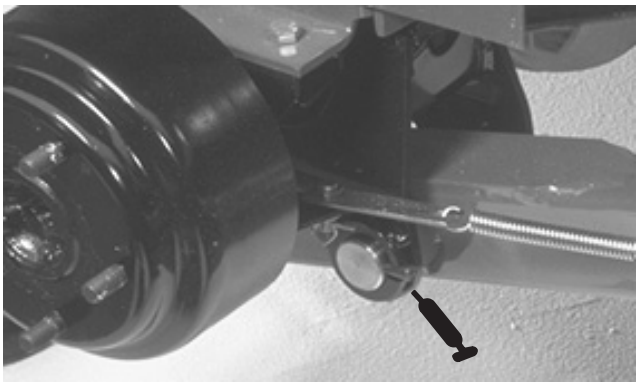

**Figure 18**

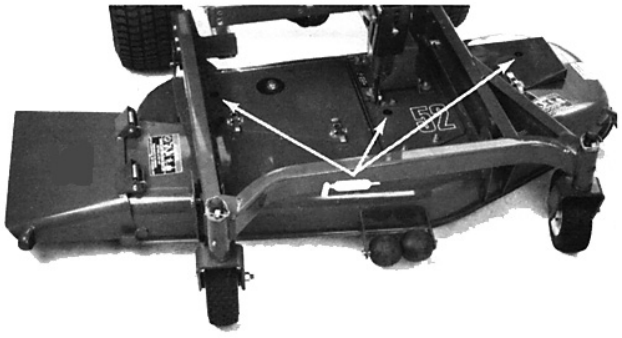

**Figure 19**

**2.** Position the machine and cutting unit on a level surface and lower the cutting unit. Remove the dipstick/fill plug from the top of the gear box (Fig. 20) and make sure that the lubricant is between the marks on the dipstick. If the lubricant level is low, add SAE 80–90 wt. gear lube until the level is between the marks.

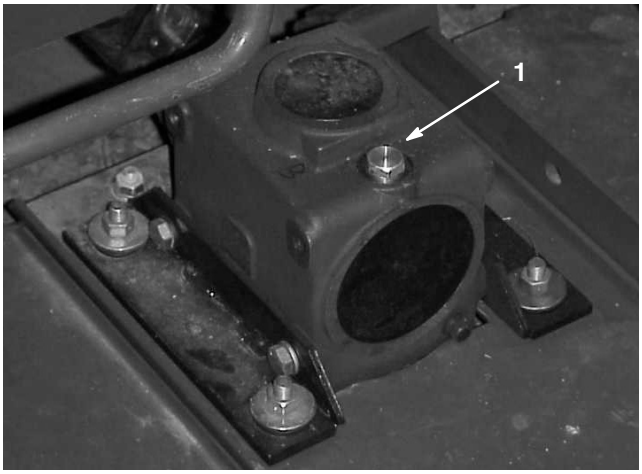


**Figure 20**

1. Fill/check plug

## Separating the Cutting Unit from the Traction Unit

1. Position the machine on a level surface, raise the cutting unit, engage the parking brake, put the traction pedal in neutral, the PTO lever in the Off position, shut the engine off, and remove the ignition key.

**Caution**

**On the Groundsmaster 200 Series, the counterbalance spring is in tension when the deck is in the lowered position.**

**Always raise the deck before adjusting or removing the spring.**

2. On the Groundsmaster 200 Series only, disconnect the counterbalance from the traction unit, remove the lock pins from the brackets, separate the spring tension assemblies from the brackets, and lay them down on the deck. Loosely secure the lock pins to the brackets to prevent from losing them (Fig. 21).

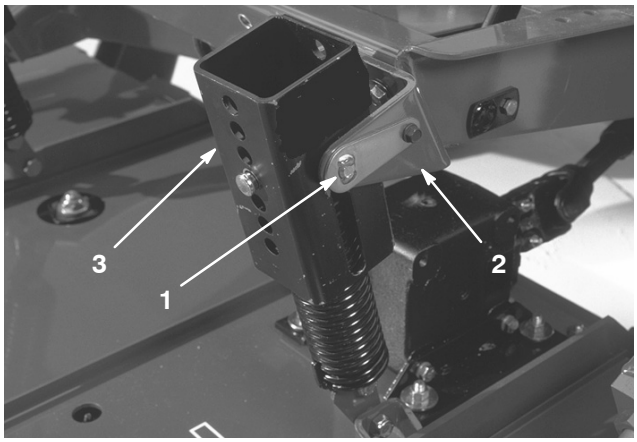


**Figure 21**

1. Lock pin
2. Bracket
3. Spring tension assembly

3. Lower the cutting unit and remove the 4 pins from the height-of-cut brackets.
4. Start the engine and raise the cutting unit frame.
5. Stop the engine and slide the cutting unit away from the traction unit and carrier frame, separating the male and female sections of the PTO shaft (Fig. 22).

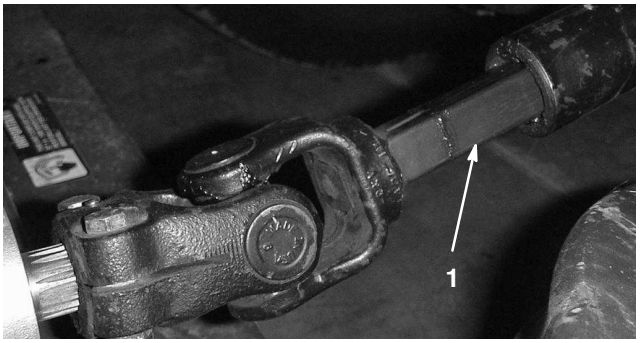


**Figure 22**

1. PTO shaft

**Danger**

**If the engine is started and the PTO shaft is allowed to rotate, serious injury could result.**

**Do not start the engine and engage the PTO lever when the PTO shaft is not connected to the gear box on the cutting unit.**

6. The deck carrier frame must be removed if the traction unit will be used with any other accessory.

## Servicing the Bushings in the Castor Arms

The castor arms have bushings pressed into the top and bottom portion of the tube which, after many hours of operation, will wear. To check the bushings, move the castor fork back and forth and from side to side. If the castor shaft is loose inside the bushings, the bushings are worn and must be replaced.

1. Raise the cutting unit so that the wheels are off of the floor and block it so that it cannot accidentally fall.
2. Remove the lynch pin and thrust washers from the top of the castor spindle.
3. Pull the castor spindle out of the mounting tube. Allow the thrust washers to remain on the bottom of the spindle.
4. Insert a pin punch into the top or bottom of the mounting tube and drive the bushing out of the tube (Fig. 23). Also drive the other bushing out of the tube. Clean the inside of the mounting tube to remove any dirt.

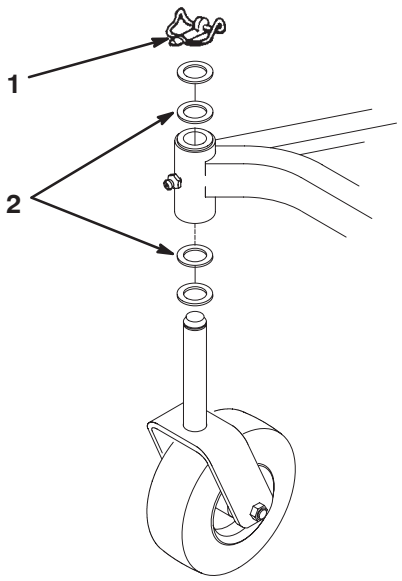


**Figure 23**

1. Lynch pin
2. Thrust washers

**5.** Apply grease to the inside and outside of the new bushings. Using a hammer and flat plate, drive the bushings into the mounting tube.

**6.** Inspect the castor shaft for wear and replace it if it is damaged.

**7.** Push the castor shaft through the bushings and mounting tube. Slide the spacers onto the shaft and secure it with the lynch pin.

**Important** When the bushings are installed, the inside diameter may collapse slightly, and this may not allow the castor shaft to be installed. If the castor spindle does not slide through the new bushings and mounting tube, ream both bushings to an inside diameter of 1.126 inches.

# Servicing the Castor Wheel and Bearing

The castor wheel rotates on a high-quality roller bearing and is supported by a spanner bushing. Even after many hours of use, provided that the bearing was kept well lubricated, bearing wear will be minimal. However, failure to keep the bearing lubricated will cause rapid wear. A wobbly castor wheel usually indicates a worn bearing.

**1.** Remove the locknut from the capscrew holding the castor wheel assembly between the castor fork (Fig. 24). Grasp the castor wheel and slide the capscrew out of the fork.

**Note:** Account for 2 thrust washers.

**2.** Tip the wheel to the side and allow the spanner bushing (Fig. 24) to fall out.

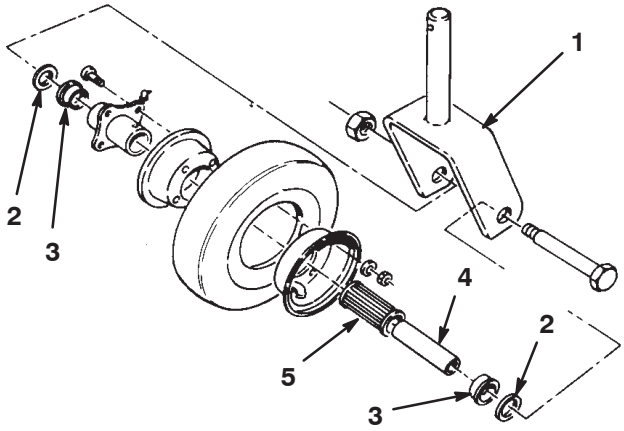


**Figure 24**

1. Castor fork
2. Thrust washer
3. Bearing retainer
4. Spanner bushing
5. Roller bearing

**3.** Remove one bearing retainer from the wheel hub and allow the bearing to fall out. Remove the bearing retainer from the opposite side of the wheel hub (Fig. 24).

**4.** Inspect the bearing, spanner bushing, and wheel for wear. Replace worn or damaged parts.

**5.** To assemble the parts, slide the spanner bushing through the hub assembly.

**6.** Mount the castor wheel assembly and washers between the fork and insert the capscrew and locknut. Tighten the capscrew and locknut until the spanner bushing and washers bottom out against the inside of the castor fork.

**7.** Pump grease through the grease fitting on the wheel until the bearing is greased thoroughly.

## Checking for a Bent Blade

1. Position the machine on a level surface, raise the cutting unit, engage the parking brake, put the traction pedal in neutral, the PTO lever in the Off position, shut the engine Off, remove the ignition key, and disconnect the wires from the spark plugs. Block the cutting unit to prevent it from accidentally falling.
2. Rotate the blade until the ends face forward and backward. Measure from the inside of the cutting unit to the cutting edge at the front of the blade (Fig. 25), and remember this dimension.



**Figure 25**

3. Rotate the opposite end of the blade forward. Measure between the cutting unit and cutting edge of the blade at the same position as in step 2. The difference between the dimensions obtained in steps 2 and 3 must not exceed 1/8 in. (3 mm). If the dimension exceeds 1/8 in. (3 mm), replace the blade because it is bent; refer to Removing the Cutting Blade, page 19.

## Removing the Cutting Blade

The blade must be replaced if a solid object is hit, the blade is out-of-balance, worn, or bent. Always use genuine Toro replacement blades to ensure safety and optimum performance. Never use blades made by other manufacturers because they could be dangerous.

**Danger**

**A worn or damaged blade can break, and a piece of the blade could be thrown into the operator's or bystander's area, resulting in serious personal injury or death.**

- **Inspect the blade periodically for wear or damage.**
- **Do not try to straighten a blade that is bent.**
- **Never weld a broken or cracked blade.**
- **Replace a worn or damaged blade with a new Toro blade to ensure continued safety certification of the product.**

1. Position the machine on a level surface, raise the cutting unit, engage the parking brake, put the traction pedal in neutral, the PTO lever in the Off position, shut the engine off, remove the ignition key, and disconnect the wires from the spark plugs. Block the cutting unit to prevent it from accidentally falling.
2. Grasp the end of the blade using a rag or thickly padded glove. Remove the blade bolt, anti-scalp cup, and blade from the spindle shaft (Fig. 26).

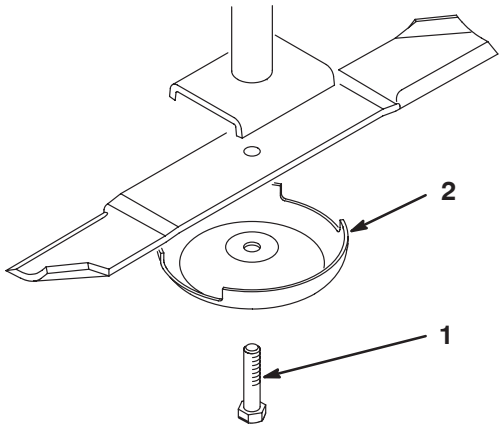


**Figure 26**

1. Blade bolt
2. Anti-scalp cup

3. Install the blade—sail facing toward the cutting unit—with the anti-scalp cup and blade bolt. Tighten the blade bolt to 85–110 ft.-lb. (115–149 N·m).

## Inspecting and Sharpening the Blade

Two areas must be considered when checking and servicing the cutting blade: the sail and the cutting edge. Both cutting edges and the sail, which is the turned up portion opposite the cutting edge, contribute to a good quality-of-cut. The sail is important because it pulls grass up straight, thereby producing an even cut. However, the sail will gradually wear down during operation, and this condition is normal. As the sail wears down, the quality-of-cut will degrade somewhat, although the cutting edges are sharp. The cutting edge of the blade must be sharp so that the grass is cut rather than torn. A dull cutting edge is evident when the tips of the grass appear brown and shredded. Sharpen the cutting edges to correct this condition.

1. Position the machine on a level surface, raise the cutting unit, engage the parking brake, put the traction pedal in neutral, the PTO lever in the Off position, shut the engine off, remove the ignition key, and disconnect the wires from the spark plugs. Block the cutting unit to prevent it from accidentally falling.
2. Examine the cutting ends of the blade carefully, especially where the flat and curved parts of the blade meet (Fig. 27-A). Since sand and abrasive material can wear away the metal that connects the flat and curved parts of the blade, check the blade before using the machine. If wear is noticed (Fig. 27-B), replace the blade; refer to Removing the Cutting Blade, page 19.

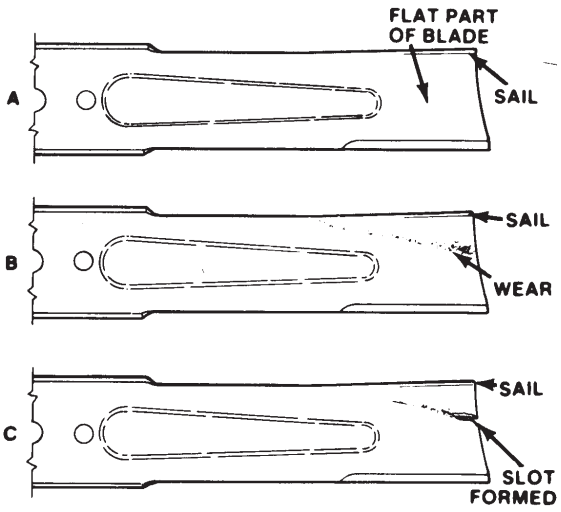


**Figure 27**

**Warning**

**If the blade is allowed to wear, a slot will form between the sail and flat part of the blade (Fig. 27-C). Eventually, a piece of the blade may break off and be thrown from under the housing, possibly resulting in serious injury to yourself or bystanders.**

- **Inspect the blade periodically for wear or damage.**
- **Replace a worn or damaged blade with a new Toro blade to ensure continued safety certification of the product.**

3. Examine the cutting edges of all blades. Sharpen the cutting edges if they are dull or nicked. Sharpen only the top side of the cutting edge and maintain the original cutting angle to ensure sharpness (Fig. 28). The blade will remain balanced if the same amount of metal is removed from both cutting edges.

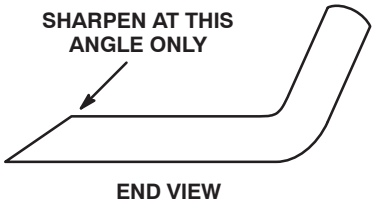


**Figure 28**

**Note:** Remove the blades and sharpen them on a grinder; refer to Removing the Cutting Blades, page 19, steps 1 and 2. After sharpening the cutting edges, install the blade with the anti-scalp cup and blade bolt. The blade sails must be on top of the blade. Tighten the blade bolt to 85–110 ft.-lb. (115–149 N·m).

# Checking and Correcting Mismatch of Blades

If one cutting blade cuts lower than the others, correct them as follows:

1. Lower the cutting unit onto a level surface, engage the parking brake, put the traction pedal in neutral, the PTO lever in the Off position, shut the engine off, remove the ignition key, and disconnect the wires from the spark plugs. Make sure that the tire pressure is equal on all tires.
2. Raise the height-of-cut to the 4 in. (102 mm) position; refer to Adjusting the Height-of-Cut, page 13.
3. Rotate the blades so that the tips line up with one another. The tips of the adjacent blades must be within 1/8 in. (3 mm) of each other. If the tips are not within 1/8 in. (3 mm) of each other, proceed to step 10 and add shims between the spindle housing and bottom of the cutting unit.
4. Check to make sure that the front height-of-cut pins are resting properly on the frame cushions. If the pins are not resting properly, place a shim or shims under the cushion to raise it for proper alignment.
5. Position all 3 blades in the “A” position (Fig. 29) and measure from the level surface to the bottom of the tip end of each blade (Fig. 30).

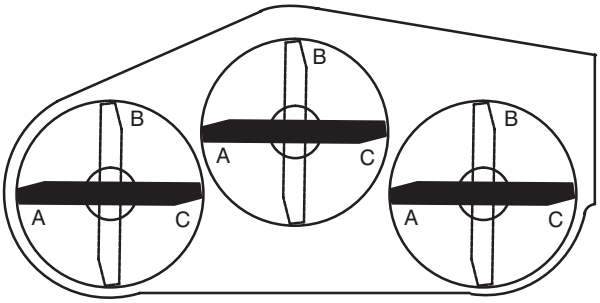


**Figure 29**

6. Note the measurement attained at “A”, rotate the blades to the “B” position (Fig. 29), measure the distance of all of the blades to the level surface, and note the dimensions (Fig. 30).

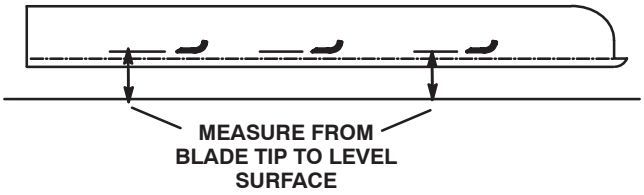


**Figure 30**

7. Rotate the blades to the “C” position, measure, and note the distance measured (Fig. 29 and 30).

**8.** Compare the measurements at various positions. All dimensions must be equal within 1/4 in. (6 mm) from any 2 adjacent blades. The difference between the dimensions of all 3 blades must not exceed 3/8 in. (10 mm). If the difference exceeds specifications, proceed to step 9.

**9.** Remove the capscrews, flat washers, and locknuts from the outer spindle in the area where the shims must be added. To raise or lower the blade, add a shim, Part No. 3256-24, between the spindle housing and bottom of the cutting unit. Continue checking the alignment of the blades and adding shims until the tips of the blades are within the required dimension.

**10.** Equalize the side-to-side measurements as follows:

A. Cutting units usually operated at 1 to 2 in. (25 to 51 mm) height-of-cut should have the low side of the cutting unit raised. Remove the lynch pin securing the castor wheel on the low end (Fig. 31) and remove the castor assembly.

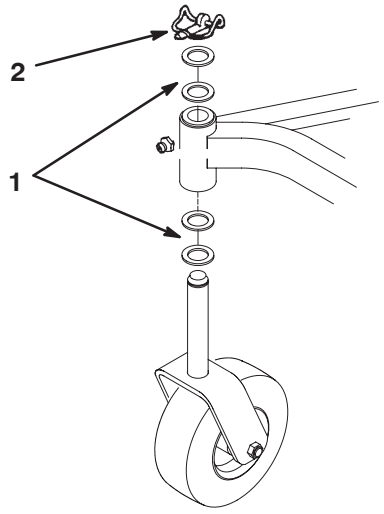


**Figure 31**

1. Thrust washers (as required)
2. Lynch pin

B. Transfer one thrust washer from the top side of the castor shaft to the lower side, install the castor assembly, and compare the blade height of all blades; refer to steps 3 through 7. Continue adding thrust washers if the height still does not meet the requirements.

C. If the cutting unit is operated at the 2 to 4 in. (51 mm to 102 mm) height-of-cut, lower the high side of the cutting unit. Remove the lynch pin of the castor at the high end of the unit and remove the castor assembly (Fig. 31).

D. Transfer one thrust washer from the lower side of the castor shaft to the top side, install the assembly, and compare the blade height of all of the blades; refer to steps 3 through 7. Repeat the procedure if the height still does not meet the requirements.

E. If the height is within the specified dimension, install the lynch pin, set the height-of-cut to the proper height, and resume operation.

# Replacing the Grass Deflector

**1.** Position the machine on a level surface, raise the cutting unit, engage the parking brake, put the traction pedal in neutral, the PTO lever in the Off position, shut the engine off, and remove the ignition key. Block the cutting unit to prevent it from accidentally falling.

**2.** Remove the 2 capscrews, locknuts, and springs securing the deflector mounts to the pivot brackets (Fig. 32).

**3.** To remove the pivot brackets, remove the carriage bolts and nuts (Fig. 32).

**4.** Install the pivot brackets on top of the discharge opening with the carriage bolts and nuts. The head of the carriage bolts must be on the inside of the cutting unit.

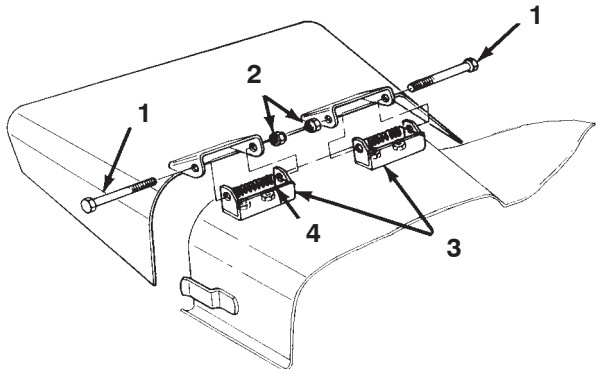


**Figure 32**

1. Capscrew
2. Locknuts
3. Pivot brackets
4. Spring

**5.** Position the deflector mounts on the pivot brackets and secure the parts together with the capscrews, locknuts, and springs. Both locknuts must face each other. Tighten the locknuts until they are flush against the deflector pivots.

**6.** Lift the deflector and allow it to drop to check the spring tension. The deflector must be held firmly in the full downward position by the spring tension. Correct it if necessary.

## Adjusting the Idler Pulley

The idler pulley applies force against the belt so that power can be transmitted to the blade pulleys. If the idler is not tensioned against the belt with sufficient force, maximum power will not be transmitted to the pulleys. Initial tension on a new belt requires 25 to 30 ft.-lb. (34 to 41 N·m) of torque on the large nut, which applies force against the belt. As the belt wears and loosens, 20 to 25 ft.-lb. (27 to 34 N·m) of torque on the large nut is required. If the idler is not adjusted to these specifications, an adjustment is necessary.

1. Position the machine on a level surface, lower the cutting unit, engage the parking brake, put the traction pedal in neutral, the PTO lever in the Off position, shut the engine off, and remove the ignition key.
2. Release and unhook the latches securing the center cover to the top of the cutting unit. Remove the cover from the cutting unit.
3. Loosen the 2 nuts securing the idler plate in place. Using a socket and torque wrench, tighten the idler adjusting nut to 25–30 ft.-lb. (24–41 N·m) (Fig. 33).

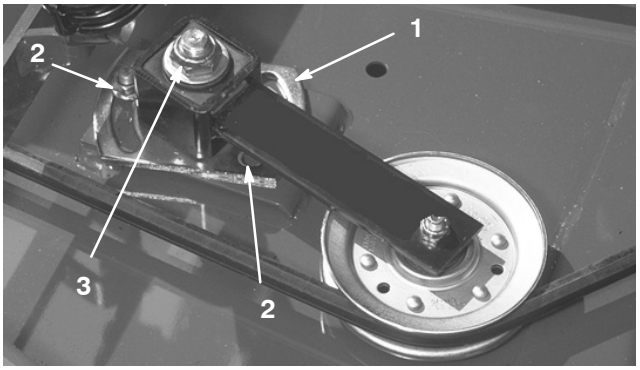


**Figure 33**

1. Idler plate
2. Nuts (2)
3. Idler adjusting nut

4. Hold the torque against the belt and tighten the 2 nuts so that the idler plate is held securely in place. Release the idler adjusting nut. Install the cover and secure the latches.

## Replacing the Drive Belt

The blade drive belt, tensioned by the adjustable idler, is very durable. However, after many hours of use, the belt will show signs of wear. Signs of a worn belt are: squealing when belt is rotating, blades slipping when cutting grass, frayed edges, burn marks, and cracks. Replace the belt if any of these conditions are evident.

1. Position the machine on a level surface, lower the cutting unit, engage the parking brake, put the traction pedal in neutral, the PTO lever in the Off position, shut the engine off, and remove the ignition key.
2. Release and unhook the latches securing the covers to the top of the cutting unit. Remove the covers.
3. Loosen the 2 nuts securing the idler plate in place and remove the old belt from the pulleys.
4. To install a new belt, the gear box base must be removed. To do this, remove the 4 carriage bolts and locknuts holding the gear box base.
5. Install the new belt around the gear box pulley, spindle pulleys, stationary idler pulley, and adjustable idler pulley (Fig. 34).

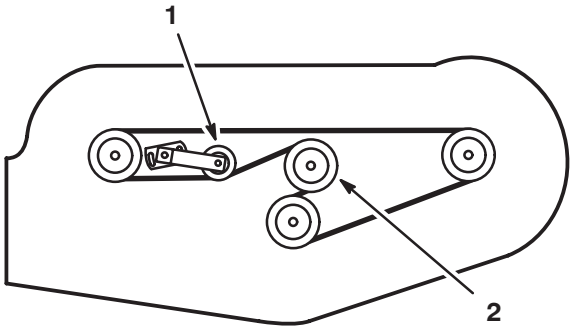


**Figure 34**

1. Adjustable idler pulley
2. Gear box pulley

6. Install the gear box base with the carriage bolts and locknuts.
7. Using a torque wrench, adjust the tension of the idler pulley against the belt; refer to Adjusting the Idler Pulley, page 22.
8. Install the covers and secure the latches.

# Troubleshooting

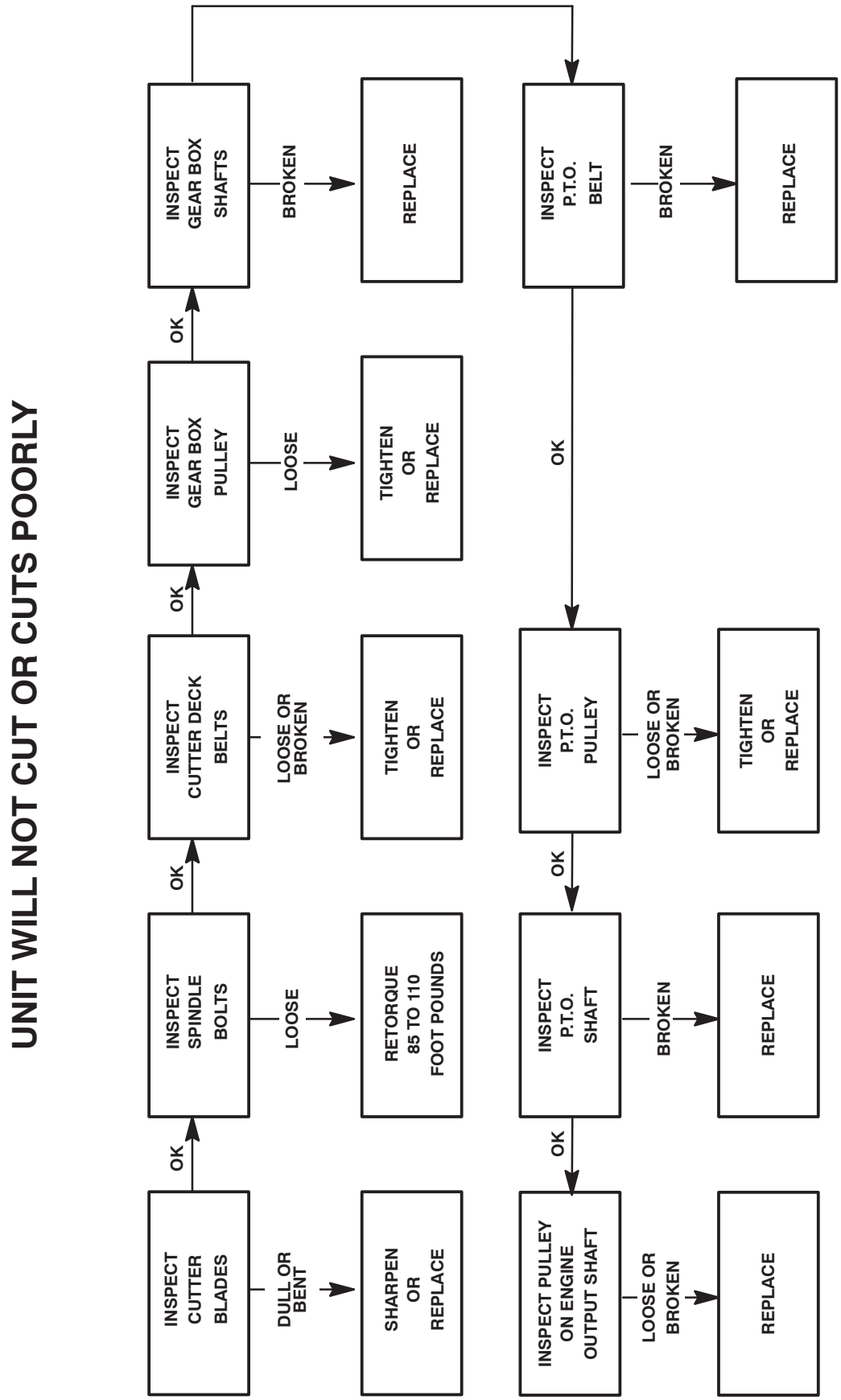

# The Toro General Commercial Products Warranty

A Two-Year Limited Warranty

## Conditions and Products Covered

The Toro Company and its affiliate, Toro Warranty Company, pursuant to an agreement between them, jointly warrant your Toro Commercial Product ("Product") to be free from defects in materials or workmanship for two years or 1500 operational hours*, whichever occurs first. Where a warrantable condition exists, we will repair the Product at no cost to you including diagnosis, labor, parts, and transportation. This warranty begins on the date the Product is delivered to the original retail purchaser.

* Product equipped with hour meter

## Instructions for Obtaining Warranty Service

You are responsible for notifying the Commercial Products Distributor or Authorized Commercial Products Dealer from whom you purchased the Product as soon as you believe a warrantable condition exists.

If you need help locating a Commercial Products Distributor or Authorized Dealer, or if you have questions regarding your warranty rights or responsibilities, you may contact us at:

Toro Commercial Products Service Department
Toro Warranty Company
8111 Lyndale Avenue South
Bloomington, MN 55420-1196
952-888-8801 or 800-982-2740
E-mail: commercial.service@toro.com

## Owner Responsibilities

As the Product owner, you are responsible for required maintenance and adjustments stated in your operator's manual. Failure to perform required maintenance and adjustments can be grounds for disallowing a warranty claim.

## Items and Conditions Not Covered

Not all product failures or malfunctions that occur during the warranty period are defects in materials or workmanship. This express warranty does not cover the following:

- Product failures which result from the use of non-Toro replacement parts, or from installation and use of add-on, modified, or unapproved accessories
- Product failures which result from failure to perform required maintenance and/or adjustments
- Product failures which result from operating the Product in an abusive, negligent or reckless manner
- Parts subject to consumption through use unless found to be defective. Examples of parts which are consumed, or used up, during normal Product operation include, but are not limited to, blades, reels, bedknives, tines, spark plugs, castor wheels, tires, filters, belts, and certain sprayer components such as diaphragms, nozzles, and check valves, etc.
- Failures caused by outside influence. Items considered to be outside influence include, but are not limited to, weather, storage practices, contamination, use of unapproved coolants, lubricants, additives, or chemicals, etc.
- Normal "wear and tear" items. Normal "wear and tear" includes, but is not limited to, damage to seats due to wear or abrasion, worn painted surfaces, scratched decals or windows, etc.

## Parts

Parts scheduled for replacement as required maintenance are warranted for the period of time up to the scheduled replacement time for that part.

Parts replaced under this warranty become the property of Toro. Toro will make the final decision whether to repair any existing part or assembly or replace it. Toro may use factory remanufactured parts rather than new parts for some warranty repairs.

## General Conditions

Repair by an Authorized Toro Distributor or Dealer is your sole remedy under this warranty.

**Neither The Toro Company nor Toro Warranty Company is liable for indirect, incidental or consequential damages in connection with the use of the Toro Products covered by this warranty, including any cost or expense of providing substitute equipment or service during reasonable periods of malfunction or non-use pending completion of repairs under this warranty. Except for the Emissions warranty referenced below, if applicable, there is no other express warranty. All implied warranties of merchantability and fitness for use are limited to the duration of this express warranty.**

Some states do not allow exclusions of incidental or consequential damages, or limitations on how long an implied warranty lasts, so the above exclusions and limitations may not apply to you.

This warranty gives you specific legal rights, and you may also have other rights which vary from state to state.

**Note regarding engine warranty:** The Emissions Control System on your Product may be covered by a separate warranty meeting requirements established by the U.S. Environmental Protection Agency (EPA) and/or the California Air Resources Board (CARB). The hour limitations set forth above do not apply to the Emissions Control System Warranty. Refer to the Engine Emission Control Warranty Statement printed in your operator's manual or contained in the engine manufacturer's documentation for details.

## Countries Other than the United States or Canada

Customers who have purchased Toro products exported from the United States or Canada should contact their Toro Distributor (Dealer) to obtain guarantee policies for your country, province, or state. If for any reason you are dissatisfied with your Distributor's service or have difficulty obtaining guarantee information, contact the Toro importer. If all other remedies fail, you may contact us at Toro Warranty Company.

Part No. 374-0031 Rev. C