Form No. 3354-259 Rev A

TORO®

Count on it.

Operator's Manual

Spring Rake

For Sand Pro®/Infield Pro® 3040 and 5040 Traction Units

Model No. 08752—Serial No. 260000001 and Up

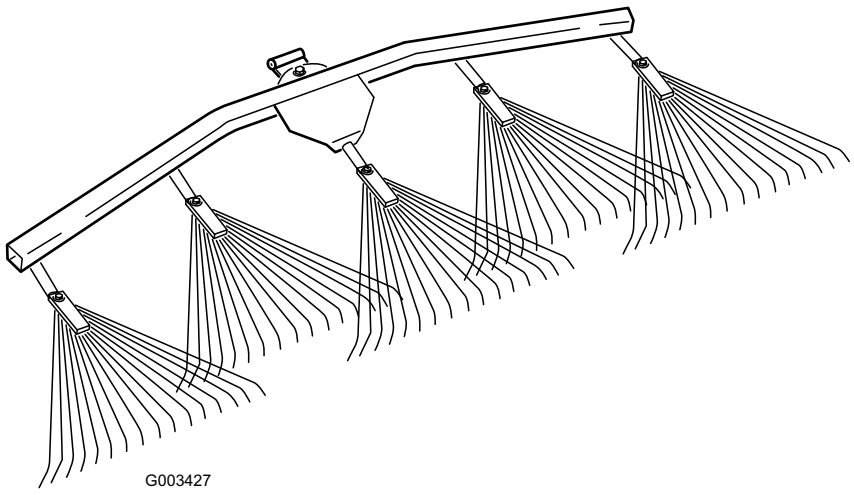

G003427

CE

Register your product at www.Toro.com

Original Instructions (EN)

Introduction

Read this information carefully to learn how to operate and maintain your product properly and to avoid injury and product damage. You are responsible for operating the product properly and safely.

You may contact Toro directly at www.Toro.com for product and accessory information, help finding a dealer, or to register your product.

Whenever you need service, genuine Toro parts, or additional information, contact an Authorized Service Dealer or Toro Customer Service and have the model and serial numbers of your product ready. Figure 1 identifies the location of the model and serial numbers on the product. Write the numbers in the space provided.

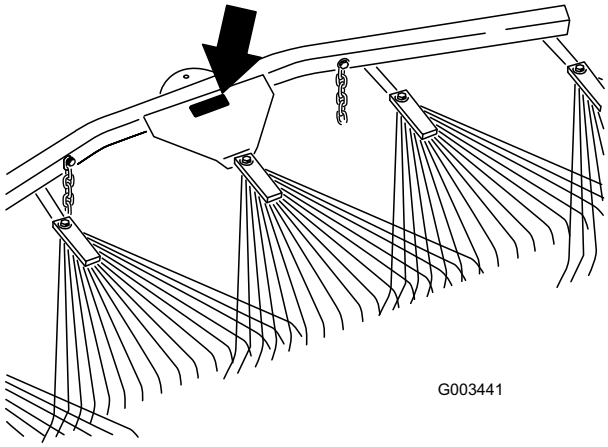

Figure 1

1. Model and serial number location

Model No. _____
Serial No. _____

This manual identifies potential hazards and has safety messages identified by the safety alert symbol (Figure 2), which signals a hazard that may cause serious injury or death if you do not follow the recommended precautions.



Figure 2

1. Safety alert symbol

This manual uses 2 other words to highlight information. **Important** calls attention to special mechanical information and **Note** emphasizes general information worthy of special attention.

Contents

Introduction 2
Safety 3
Safety and Instructional Decals 3
Setup 4
1 Installing the Spring Rake on a Tooth Rake..... 4
2 Reading the Documentation and Storing the Loose Parts..... 5
Product Overview 6
Operation 7
Training Period 7
General Raking Information 7
Raking Pattern 7
Entering and Leaving the Trap..... 7
Setting the Transport Position 7
Installing the Spring Rake on the Traction Unit 8
Adjusting the Rake Angle..... 10
Maintenance 11
Inspecting and Cleaning the Rake and Traction Unit 11
Greasing the Attachment Adapter..... 11

© 2006—The Toro® Company
8111 Lyndale Avenue South
Bloomington, MN 55420

Contact us at www.Toro.com.
Printed in the USA.
All Rights Reserved

Safety

Safety and Instructional Decals

Safety decals and instructions are easily visible to the operator and are located near any area of potential danger. Replace any decal that is damaged or lost.

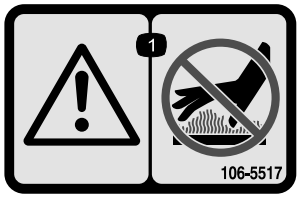

106-5517

With the Lift Arm Assembly Only

1. Warning—do not touch the hot surface.

Setup

Loose Parts

Use the chart below to verify that all parts have been shipped.

Step	Description	Qty.	Use
1	Spring rake assembly	1	Install the lift arm adapter assembly.
	Curved pivot bracket	1	
	Shoulder bolt	1	
	Washer (0.531 x 1.063)	3	
	Washer (0.469 x 0.922)	1	
	Locknut (7/16 inch)	1	
	Clevis pin (1/2 x 4-1/2 inches)	1	
	Cotter pin	1	
2	Operator's Manual	1	Read the documentation and store it and the loose parts in a safe location.
	Parts Catalog	1	
	Straight pivot bracket	1	
	Bolt (3/8 x 2-1/2 inches)	2	
	Washer (3/8 x 7/8 inch)	4	
	Spacer	2	
	Flange nut (3/8 inch)	2	

Important: This kit was designed to be installed on the back of the Tooth Rake or the traction unit. To mount it to the traction unit, you must obtain a lift arm/adapter assembly; refer to Installing the Spring Rake on the Traction Unit in Operation, page 7.

Step 1

Installing the Spring Rake on a Tooth Rake

Parts needed for this step:

1	Spring rake assembly
1	Curved pivot bracket
1	Shoulder bolt
3	Washer (0.531 x 1.063)
1	Washer (0.469 x 0.922)
1	Locknut (7/16 inch)
1	Clevis pin (1/2 x 4-1/2 inches)
1	Cotter pin

Procedure

1. Secure the curved pivot bracket to the spring rake with a shoulder bolt, washer (.531 x 1.063), washer (.469 x .922), and locknut (7/16 inch) as shown in Figure 3.

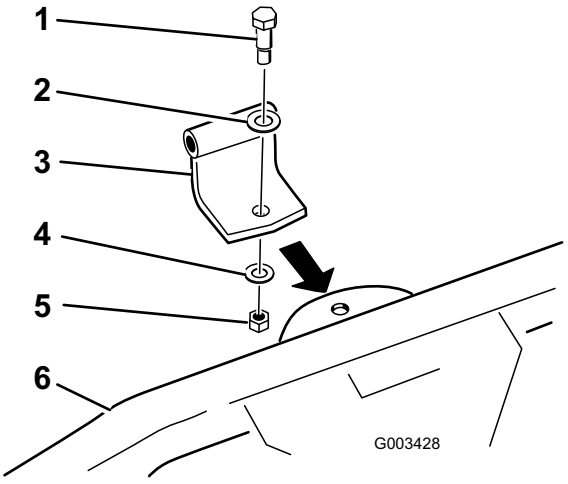

Figure 3

1. Shoulder bolt
2. Washer (0.531 x 1.063)
3. Curved pivot bracket
4. Washer (0.469 x 0.922)
5. Locknut (7/16 inch)
6. Spring rake

2. Connect the curved pivot bracket to the tooth rake as illustrated in Figure 4 with a clevis pin (1/2 x 4-1/2 inches), 2 washers (0.531 x 1.063), and a cotter pin.

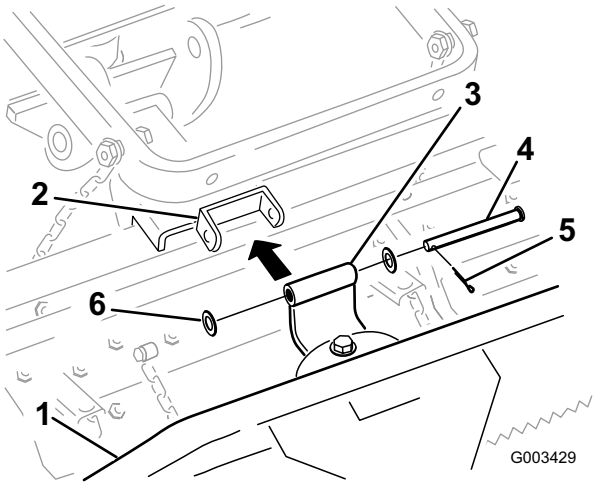

Figure 4

1. Spring rake
2. Tooth rake bracket
3. Curved pivot bracket
4. Clevis pin (1/2 x 4-1/2 inches)
5. Cotter pin
6. Washer (0.531 x 1.063)

3. Secure the top link of each transport chain to the back of the lift arm with a bolt (3/8 x 2-1/2 inch), 2 washers (3/8 x 7/8 inch), a spacer, and a flange nut (3/8 inch) as shown in Figure 5.

   Note: You can use the fasteners from the tooth rake for this step.

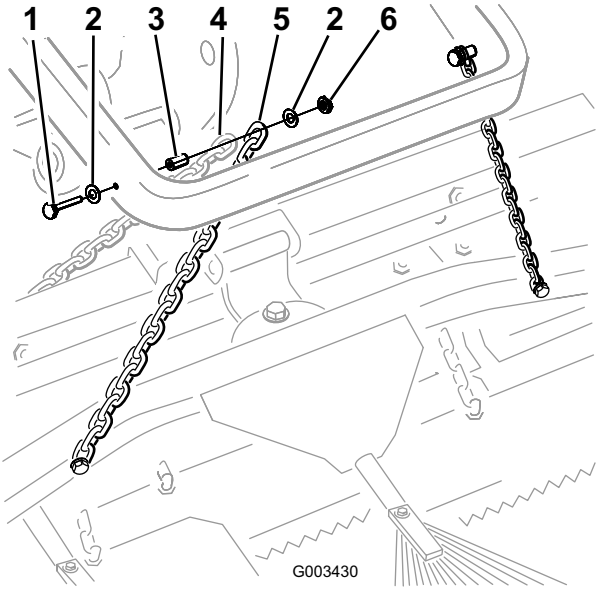

Figure 5

1. Bolt (3/8 x 2-1/2 inch)
2. Washer (3/8 x 7/8 inch)
3. Spacer
4. Tooth rake transport chain
5. Spring rake transport chain
6. Flange nut (3/8 inch)

Step 2

Reading the Documentation and Storing the Loose Parts

Parts needed for this step:

1	*Operator's Manual*
1	*Parts Catalog*
1	Straight pivot bracket
2	Bolt (3/8 x 2-1/2 inches)
4	Washer (3/8 x 7/8 inch)
2	Spacer
2	Flange nut (3/8 inch)

Procedure

1. Read the documentation.
2. Store the documentation in a safe place.
3. Store any loose parts for use when mounting the spring rake directly on the traction unit; refer to Installing the Spring Rake on the Traction Unit in Operation, page 7.

Product Overview

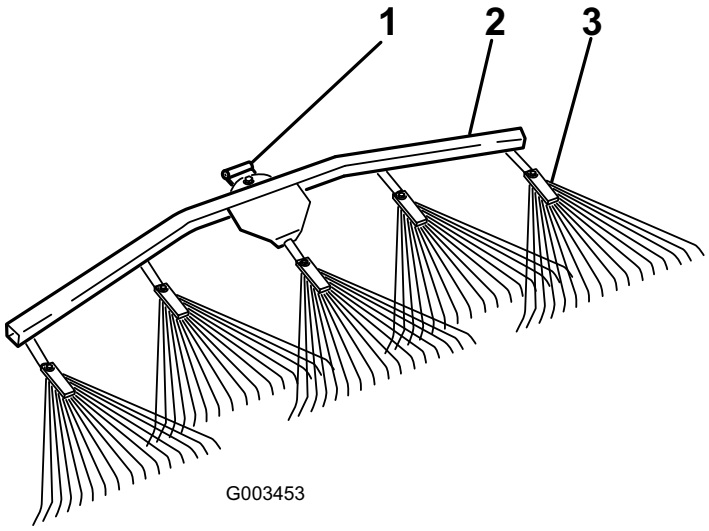

Figure 6

1. Pivot
2. Spring rake hanger
3. Spring rake

Operation

We suggest that you read this **entire section on raking** before actually raking a trap. There are many conditions that will determine the adjustments necessary. The texture and depth of the sand, moisture content, weeds, the amount of compaction; all these conditions can vary from course to course, or even from trap to trap on the same course. Make the adjustments on the rake for optimum results in your particular area.

Training Period

Practice raking in one of the large and level traps on the course. Practice starting and stopping, turning, raising and lowering the rake, entering and leaving the trap, etc. Practice at a moderate engine speed and a slow ground speed. This training period will be beneficial to the operator in gaining confidence in the performance of the machine.

General Raking Information

If the sand is deep enough, you can rake right up to the edge of the trap in level areas.

If the sand feathers out to the turf, stay far enough away from the edge to avoid disturbing the underlying soil.

Do not rake too close to a short steep bank. The sand will merely flow down into the bottom of the trap.

Some touch up with a hand rake may be necessary on steep banks, small pockets, etc.

Raking Pattern

The recommended pattern for raking a trap is shown in Figure 7. This pattern avoids unnecessary overlap, holds compaction to a minimum and leaves a neat, attractive pattern on the sand.

Enter the trap straight into the long dimension, where the bank is the least severe. Drive through the center of the trap almost to the end, turn to either direction as sharp as you can, and come right back next to the first pass. Spiral outward as shown in the drawing, and leave the trap at a right angle in a level area.

Leave steep, short banks and small pockets for touch-up with a hand rake.

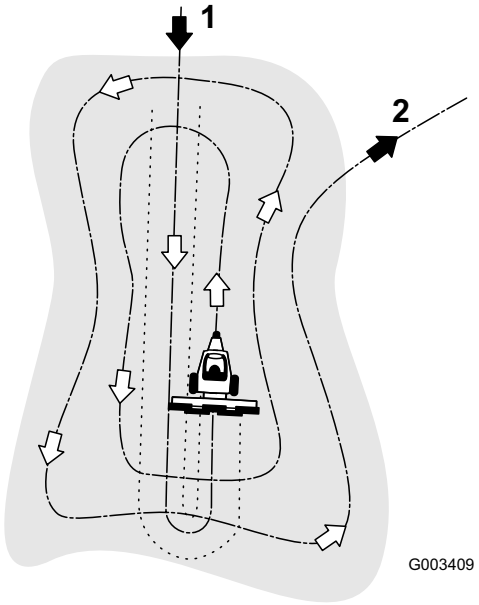

Figure 7

1. Enter a trap straight into the long dimension in a level area.
2. Exit a trap at a right angle in a level area.

Entering and Leaving the Trap

When entering the trap, do not lower the rake until the rake is actually over the sand. This will avoid cutting the turf or dragging grass clippings or other debris into the trap. Lower the rake while the machine is moving.

When leaving the trap, start raising the rake when the front wheel leaves the trap. As the machine moves out, the rake will be lifting and will not drag sand out onto the grass.

The operator will soon gain, through experience and practice, the required timing for entering and leaving the trap properly.

Setting the Transport Position

Complete the following procedure to increase the height of the rake when transporting:

1. Lower the rake and lift assembly as low as possible.
2. Disconnect the chains from the lift arms and reconnect them higher, but no more than 3 links from the free end of chains (when mounted on the back of the tooth rake) or

6 links (when mounted on the back of the traction unit).

Note: Transporting the rake with chains shortened beyond the recommended link, may result in damage to the rake pivots.

Note: To ensure proper operation of rake, the chains must be returned to the original slack position before commencing operation.

Installing the Spring Rake on the Traction Unit

1. If the spring rake is connected to a tooth rake, remove it as follows, saving all hardware for future use:

   A. Remove the transport chain from the lift arm as shown in Figure 8.

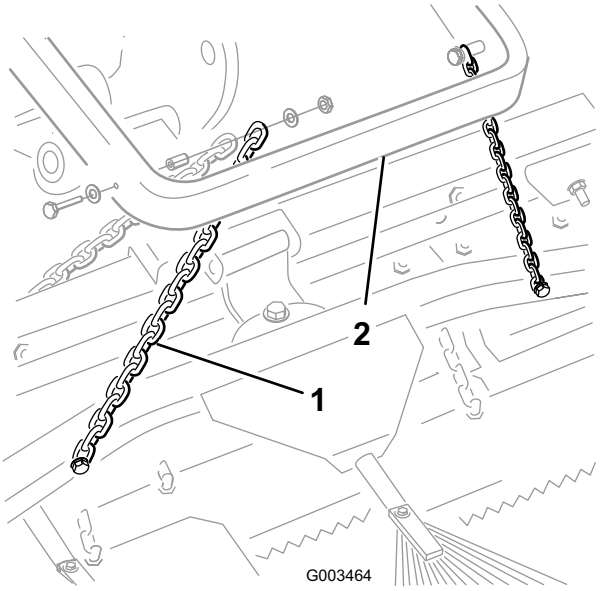

Figure 8

1. Transport chain
2. Lift arm

   B. Remove the cotter pin, washers, and clevis pin securing the curved pivot bracket to the tooth rake (Figure 9).

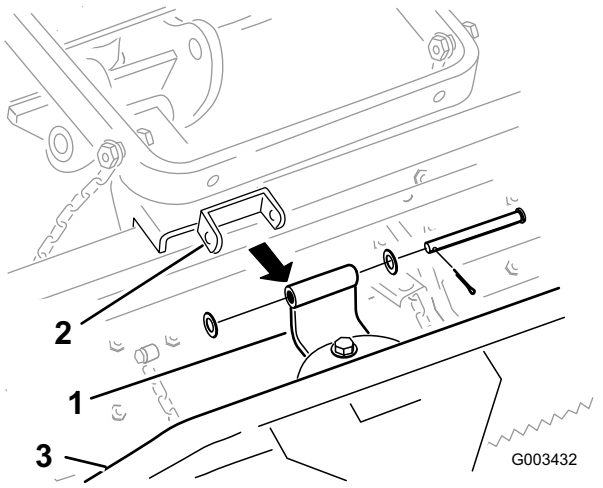

Figure 9

1. Curved pivot bracket
2. Tooth rake bracket
3. Spring rake

   C. Remove the curved pivot bracket and fasteners from the spring rake (Figure 9).

2. Secure the straight pivot bracket to the spring rake with the shoulder bolt, washer (.531 x 1.063), washer (.469 x .922), and locknut (7/16 inch) as shown in Figure 10.

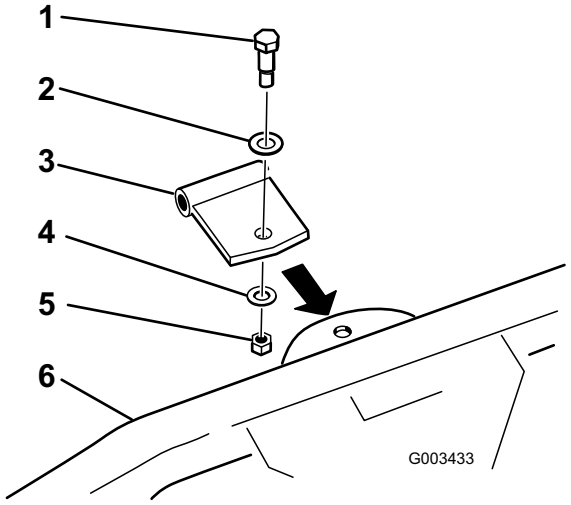

Figure 10

1. Shoulder bolt
2. Washer (0.531 x 1.063)
3. Straight pivot bracket
4. Washer (0.469 x 0.922)
5. Locknut (7/16 inch)
6. Spring rake

3. Connect the straight pivot bracket to the adapter as illustrated in Figure 11 with a clevis pin (1/2 x 4-1/2 inches), 2 washers (0.531 x 1.063), and a cotter pin.

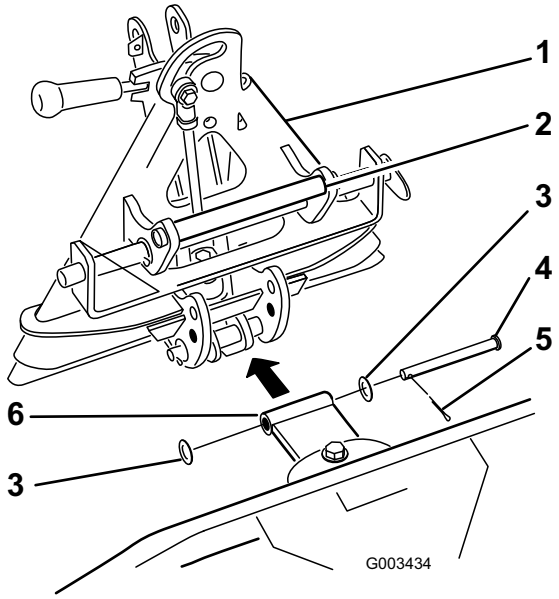

Figure 11

1. Adapter
2. Handle
3. Washer (0.531 x 1.063)
4. Clevis pin (1/2 x 4-1/2 inches)
5. Cotter pin
6. Straight pivot bracket

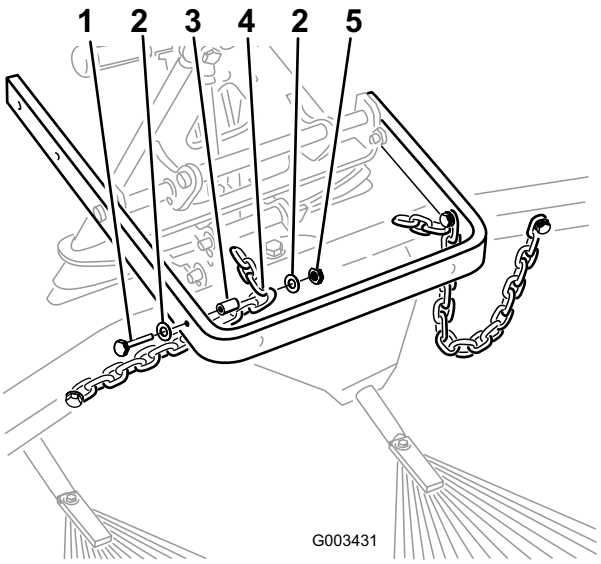

Figure 12

1. Bolt (3/8 x 2-1/2 inches)
2. Washer (3/8 x 7/8 inch)
3. Spacer
4. Chain
5. Locknut (3/8 inch)

4. Remove any attachment from the rear of the machine.
5. Back the traction unit into position in front of the attachment adapter. Lower the traction unit adapter.

   Note: Make sure the locking lever is pivoted to the left (unlocked position) as viewed from the rear of the machine.
6. Slide the attachment adapter onto the traction adapter.

If you are not careful, you could pinch your fingers between the attachment and traction unit adapters.

Always lift and move the attachment using the handle on the back of the attachment adapter (Figure 11).

7. Pivot the locking lever to the right to lock the adapters together.
8. Secure the third link of each chain to the inside of the lift arm using a bolt (3/8 x 2-1/2 inches), 2 washers (3/8 x 7/8 inch), a spacer, and a locknut (3/8 inch) (Figure 12).

   Note: For proper operation of the rake, the chains must be slack when the rake is in the lowered (operating) position.
9. With the rake mounted and secured on the traction unit, measure the gap between the top washer and the spacer in the link assembly on the attachment adapter as shown in Figure 13.

   The gap between the washer and the shoulder should be 0.060 to 0.080 inch (Figure 13).

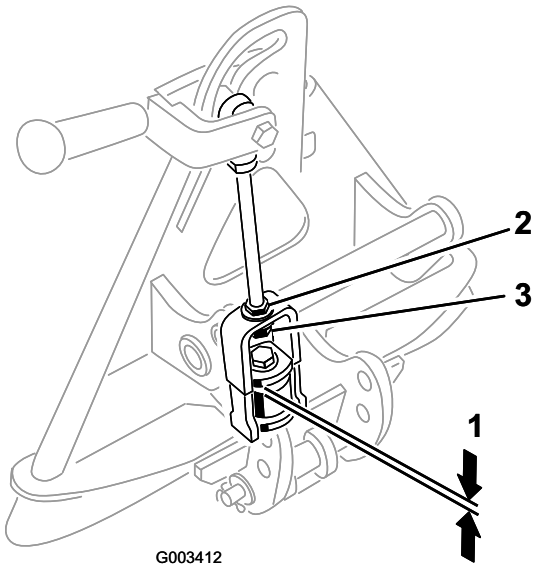

Figure 13

1. 0.060 to 0.080 inch
2. Jam nut
3. Adjustment nut

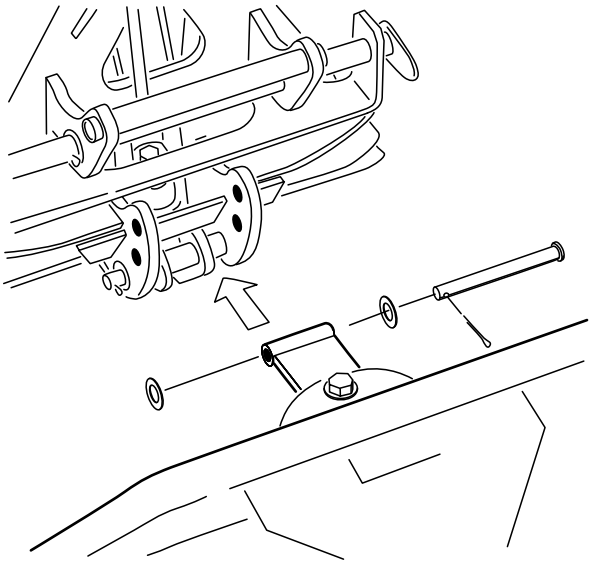

Figure 14

1. More aggressive
2. Less aggressive

10. If the gap is not correct, loosen the jam nut and tighten or loosen the adjustment nut on the link assembly as needed to change the gap (Figure 13).

Adjusting the Rake Angle

If the rake is installed directly to the traction unit, you can change the angle of the rake to increase or decrease its aggressiveness in the sand. Mount the rake pivot to the bottom holes in the attachment adapter brackets (Figure 14) for less aggressive raking or the top holes for more aggressive raking.

Maintenance

Inspecting and Cleaning the Rake and Traction Unit

When the raking operation is completed, clean the machine thoroughly. Since this machine is used primarily in sand, and sand is extremely abrasive, the sand should be flushed off after each use. If the machine is cleaned frequently, (before the sand has a chance to cake), it can be cleaned with a stream of water from a hose with the nozzle removed. A high pressure stream could drive the sand into wear areas where it could act as a grinding compound.

Greasing the Attachment Adapter

If you have purchased an attachment adapter for your spring rake, it may occasionally require greasing. If the locking lever on the attachment adapter does not pivot freely and easily, apply a light coat of grease to the area shown in Figure 15.

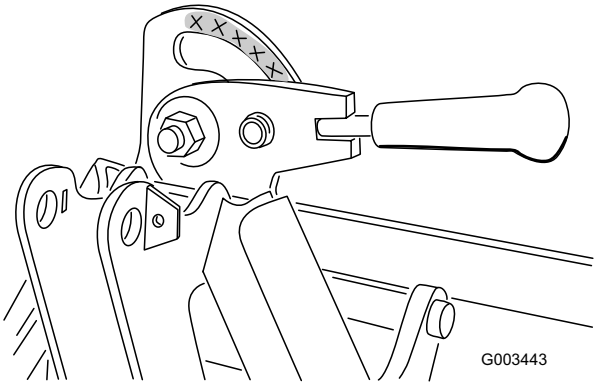

Figure 15



Count on it.