FORM NO. 3313-518

TORO®

MODEL NO. 20584-8000001 & UP

PARTS CATALOG

21" H.P. REAR BAGGER

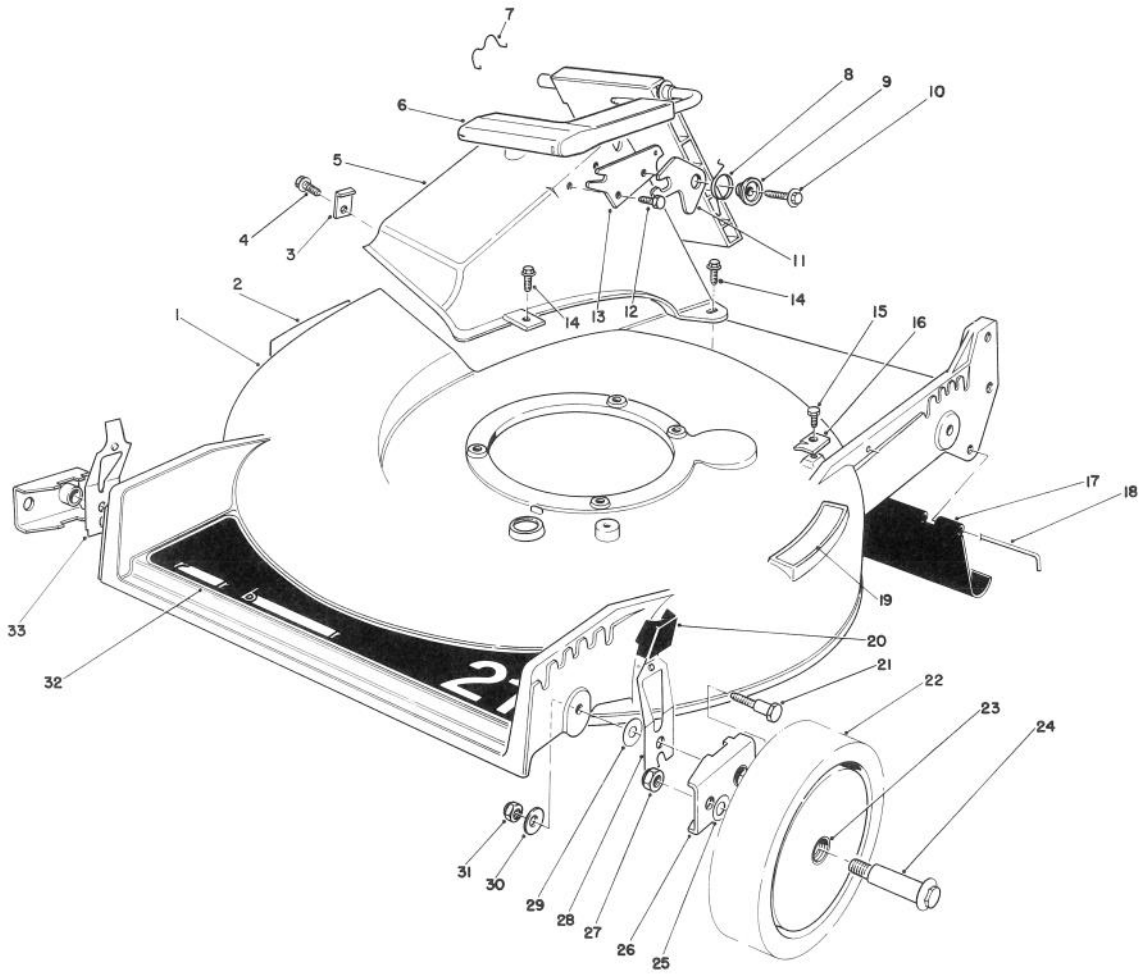

HOUSING ASSEMBLY

Ref. No.	Part No.	Description	No. Used
1	11-4079	Housing — 21" (Incl. Ref. #2 & 19)	1
2	43-8480	Decal — Danger	1
3	47-6540	Clip — Tunnel	1
4	12-3270	Screw — Self Tapping	1
5	46-3500	Tunnel — Discharge	1
6	51-0200	Discharge Door Assembly	1
7	47-5840	Retainer — Door	1
8	33-4860	Spring — Torsion	1
9	43-4840	Spacer — Latch	1
10	46-8091	Screw — Self Tapping, Hex Washer Hd.	1
11	42-4010	Latch — Safety	1

Ref. No.	Part No.	Description	No. Used
12	46-8090	Screw — Self Tapping, Hex Washer Hd.	1
13	23-1040	Plate — Latch	1
14	46-6811	Screw & Washer Assembly	3
15	32144-11	Screw — Self Tapping, Hex Washer Hd.	1
16	62-3720	Clamp — Cable	1
17	44-0580	Shield — Rear	1
18	33-3208	Rod — Shield	1
19	46-7370	Decal — Step Pad	1
20	25-7740	Knob — Arm	4
21	44-5270	Screw — Pivot	4
22	11-9509	Wheel & Tire Assembly (Incl. Ref. #23)	4

© The Toro Company — 1988

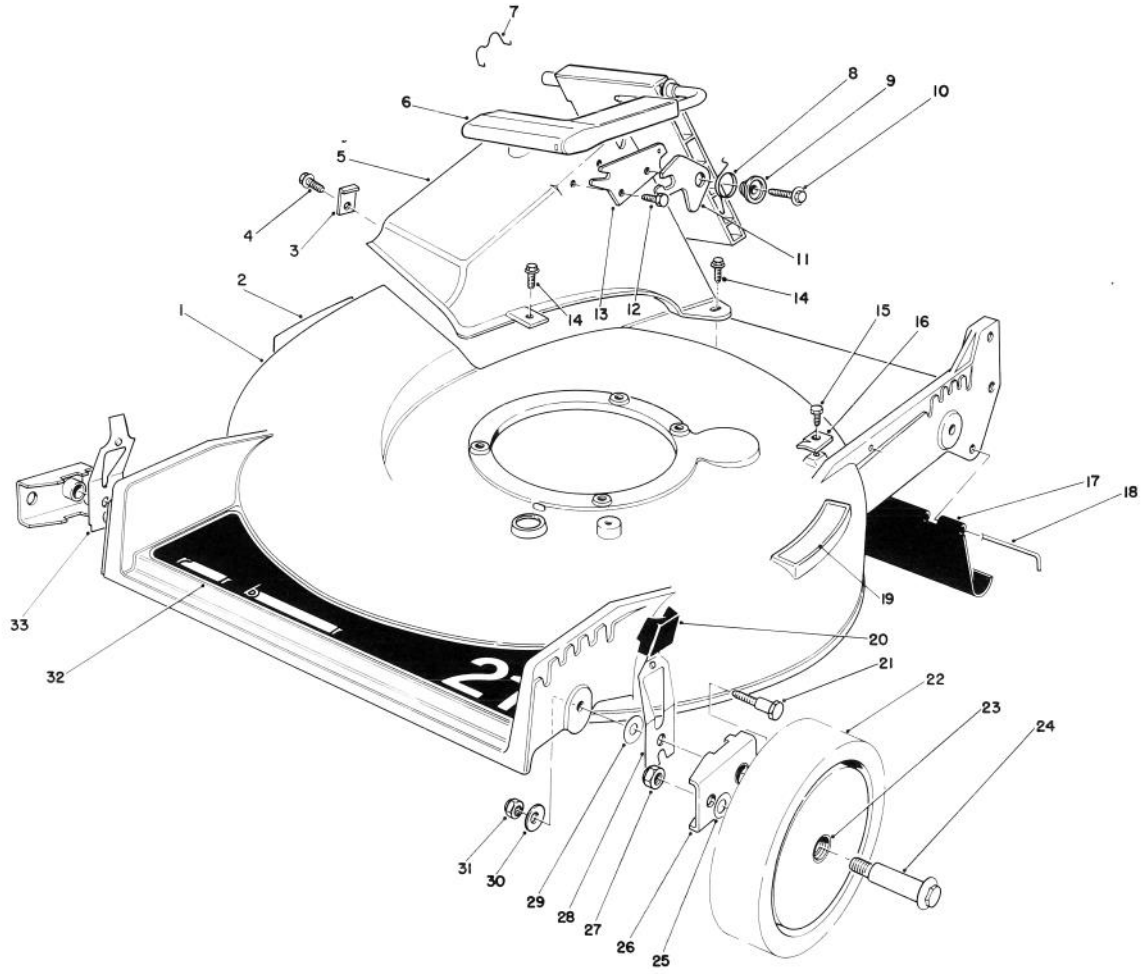

HOUSING ASSEMBLY

Ref. No.	Part No.	Description	No. Used
23	27-6250	Bushing — Wheel	8
24	27-6230	Bolt — Wheel	4
25	40-1940	Washer — Wheel	4
26	47-2940	Pivot Arm Assembly	4
27	52-3620	Locknut	4
28	52-7480	Spring Arm Assembly L.H.	2

Ref. No.	Part No.	Description	No. Used
29	5-4460	Washer — Pivot	4
30	3290-456	Washer — Belleville	4
31	3296-29	Locknut	4
32	44-0450	Decal — 21" Rear Bagger	1
33	52-7490	Spring Arm Assembly R.H.	1

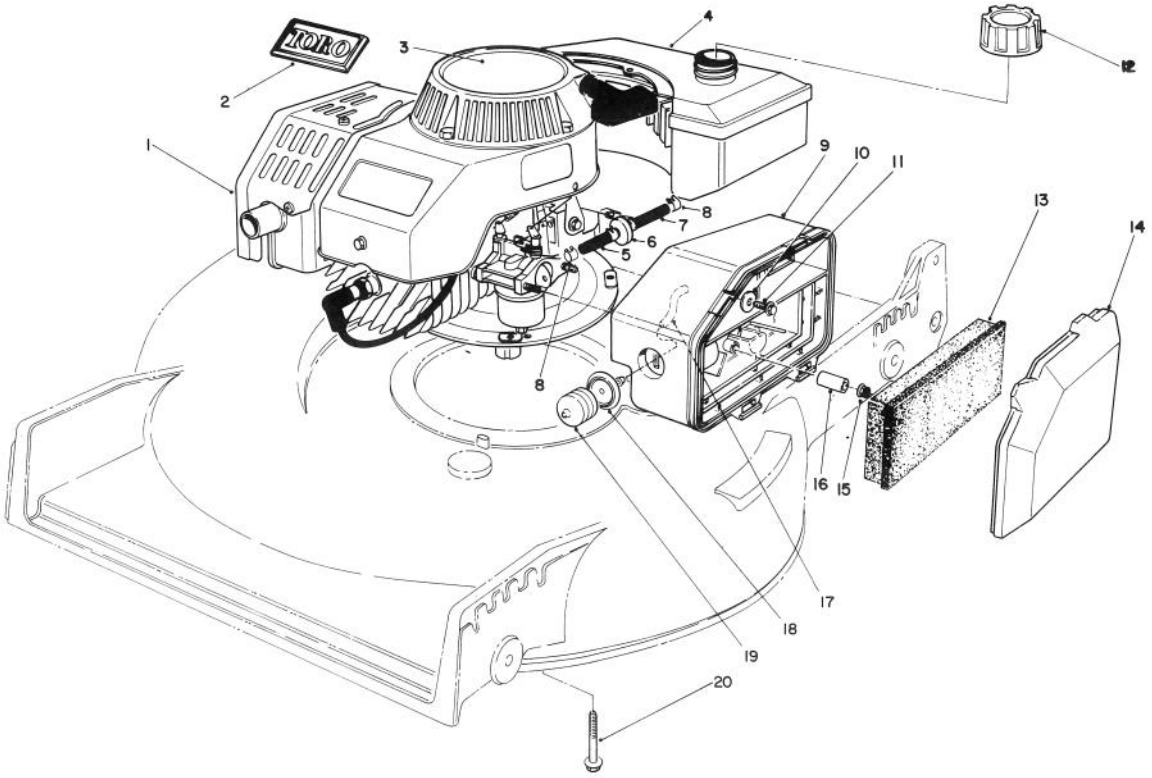

ENGINE ASSEMBLY

Ref. No.	Part No.	Description	No. Used
1	51-0402	Engine	1
2	46-8290	Plate — Logo, Toro	1
3	57-9870	Decal — Recoil	1
4	81-0042	Fuel Tank Assembly	1
5	51-3216	Line — Fuel	1
6	56-6360	Filter — Fuel	1
7	51-3215	Line — Fuel	1
8	2412-95	Clamp — Fuel Line	4
9	63-9330	Air Cleaner	1
10	3256-16	Washer — Flat	1

Ref. No.	Part No.	Description	No. Used
11	51-2690	Screw — Hex Washer Hd.	1
12	55-3575	Gas Cap	1
13	63-9380	Foam Element — Air Cleaner	1
14	63-9340	Cover — Air Cleaner	1
15	50-7180	Locknut	2
16	62-3980	Sleeve	2
17	44-3172	Hose Primer	1
18	44-2750	Body Primer	1
19	44-3100	Bulb Primer	1
20	3234-11	Screw — Hex Flange Hd.	4

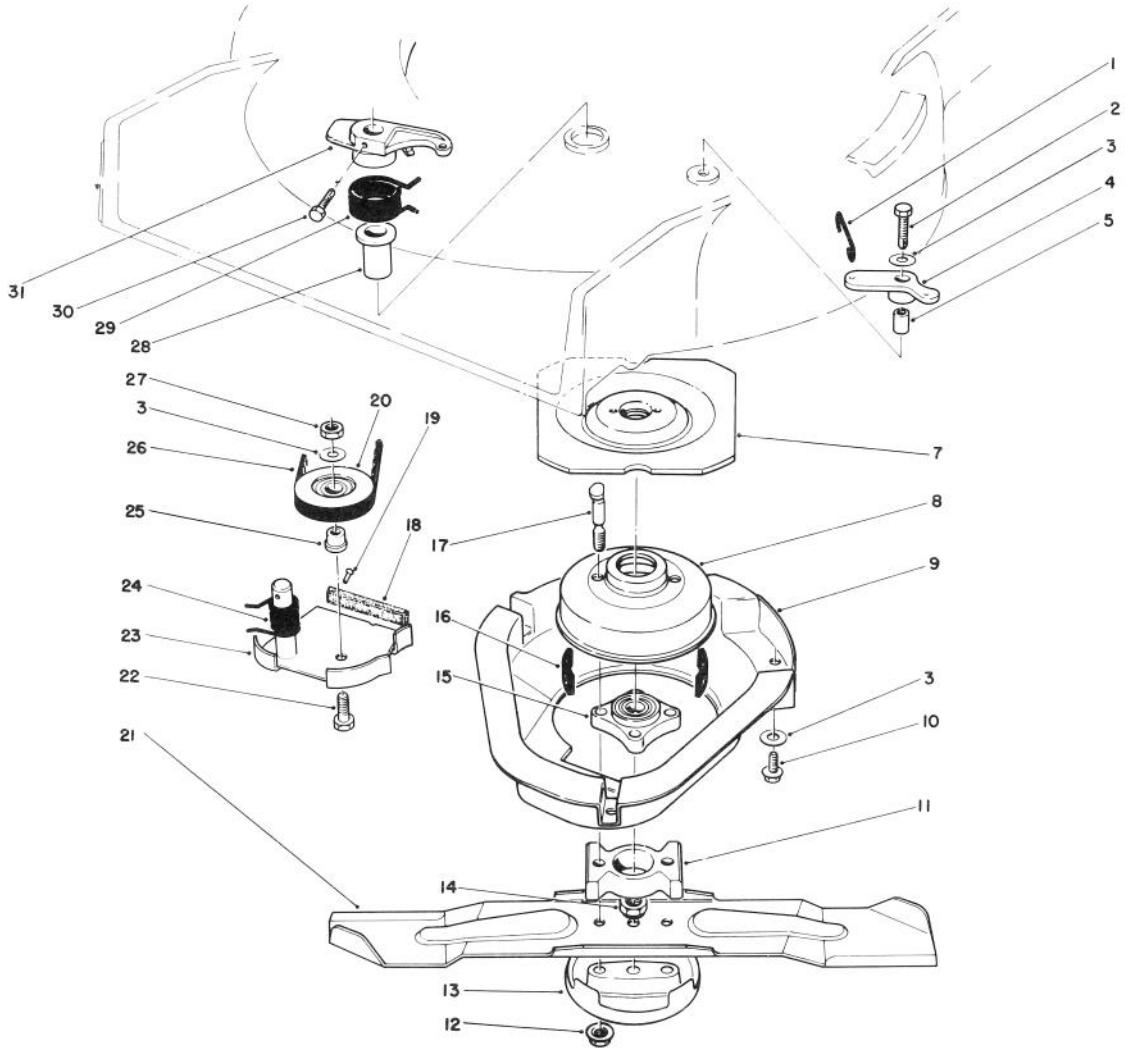

BLADE BRAKE CLUTCH ASSEMBLY

Ref. No.	Part No.	Description	No. Used
1	49-2810	Link — Control	1
2	32104-107	Screw — Self Tapping Hex Hd.	1
3	3256-23	Washer — Plain	5
4	49-7960	Bell Crank	1
5	49-7950	Sleeve — Bell Crank	1
7	56-6160	Flywheel	1
8	56-6170	Drum — Brake	1
9	46-5691	Shield	1
10	32144-11	Screw — Thread Forming Hex Washer Hd.	3
11	62-4280	Spacer — Blade	1
12	54-9190	Nut — Lock	2
13	42-0910	Cup — Anti Scalp	1
14	3296-33	Nut — Lock	1
15	42-6890	Hub Assembly	1
16	52-3480	Dampener — Vibration	2

Ref. No.	Part No.	Description	No. Used
17	42-3190	Bolt — Blade	2
18		Pad — Brake	1
19	3295-23	Rivet — Semi Tubular	2
20	46-5650	Pulley Idler	1
21	42-1000	Blade 21"	1
22	322-16	Capscrew	1
23	49-7920	Brake Plate (Incl. Ref. #18 & 19)	1
24	46-5670	Spring — Torsion Lower	1
25	46-5630	Hub — Idler Pulley	1
26	42-0884	V-Belt	1
27	3296-47	Nut — Lock	1
28	46-6680	Bushing — Flanged	1
29	49-7970	Spring — Torsion Upper	1
30	32104-96	Screw — Self Tapping Hex Hd.	1
31	49-2820	Lever	1

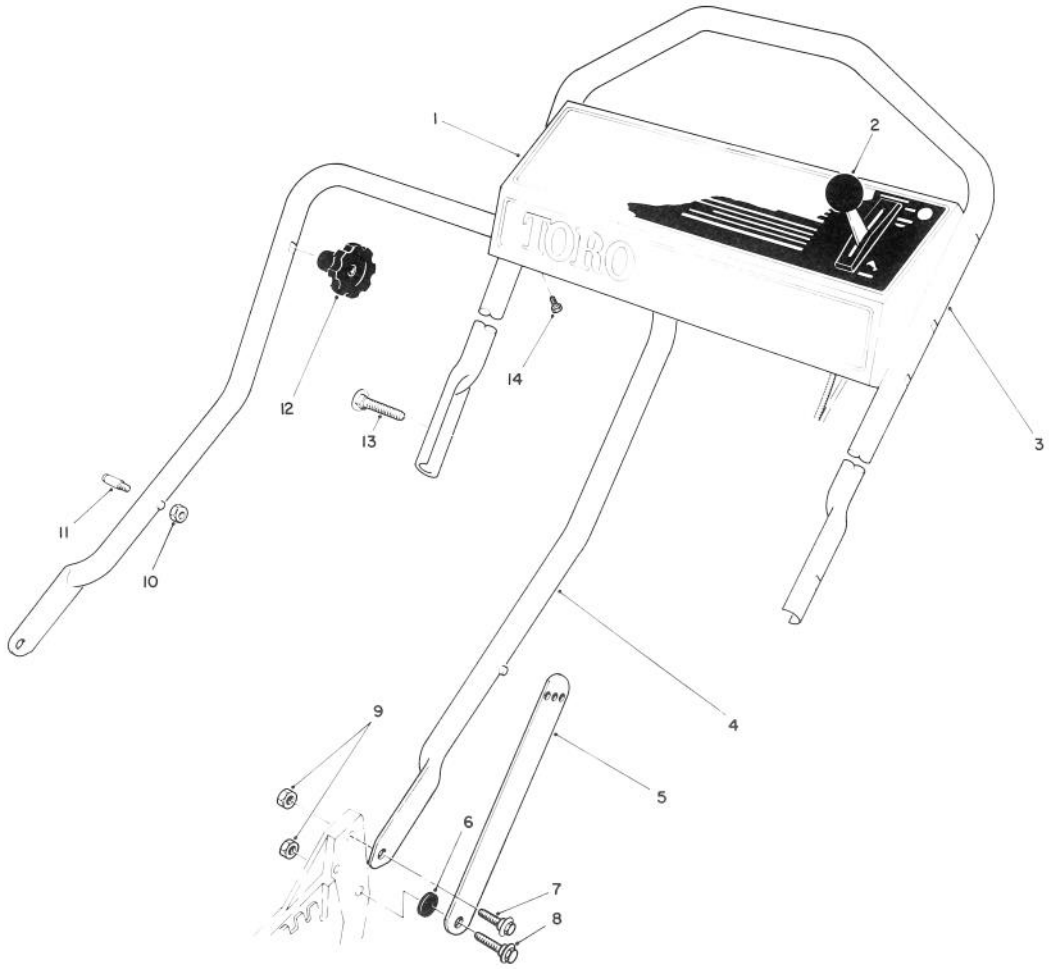

HANDLE ASSEMBLY

Ref. No.	Part No.	Description	No. Used
1	61-4290	Panel — Control	1
2	49-4183	Control — Throttle	
		(Bend Type #1)	
		(Sheath Lg. 47⅝ inch)	
		(Wire Lg. 2¾ inch)	1
3	46-5411	Handle — Upper	1
4	43-1361	Lower Handle Asembly	1
5	43-1370	Latch — Handle	2
6	3-3287	Spacer — Handle Latch	2

Ref. No.	Part No.	Description	No. Used
7	27-7211	Screw — Shoulder	2
8	27-7210	Screw — Shoulder	2
9	3296-29	Nut — Lock	4
10†	3296-47	Nut — Lock	2
11†	49-2750	Pin — Handle	2
12	19-4050	Knob — Handle Release	2
13	17-9421	Screw — Handle	2
14	32104-76	Screw — Self Tapping Slotted	4

†Service Replacement Parts.

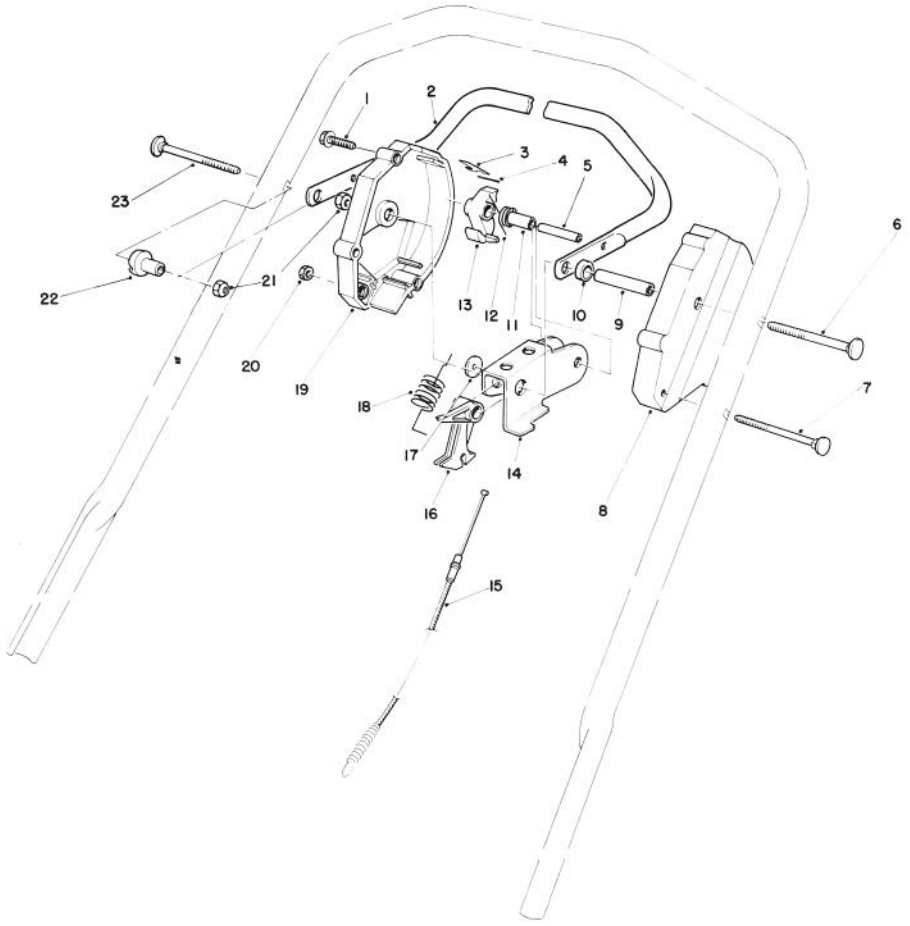

CONTROL ASSEMBLY

Ref. No.	Part No.	Description	No. Used
1	46-7040	Screw — Thread Forming Hex Washer Hd.	3
2	52-7430	Control Bar Assembly	1
3	52-7410	Spring — Leaf	1
4	57-6290	Pin — Insert	1
5	32121-9	Pin — Roll	1
6	17-9422	Screw — Handle	1
7	46-6431	Screw — Handle	1
8	46-5460	Housing — Control L.H.	1
9	46-5590	Spacer	1
10	256-276	Spacer	1
11	46-5550	Bushing — P.M.	1
12	46-5510	Spring — Torsion	1

Ref. No.	Part No.	Description	No. Used
13	46-5530	Hook — Control	1
14	62-3710	Rocker	1
15	62-3771	Cable — Clutch	1
16	46-5540	Lever — Cable	1
17	46-5600	Washer — Nylon	1
18	65-5990	Spring — Detent	1
19	66-0160	Housing — Control R.H. (Incl. Ref. #3 & 4)	1
20	3296-8	Locknut	1
21	3296-58	Locknut	2
22	49-1630	Support — Spacer	1
23	17-9421	Screw — Handle	1

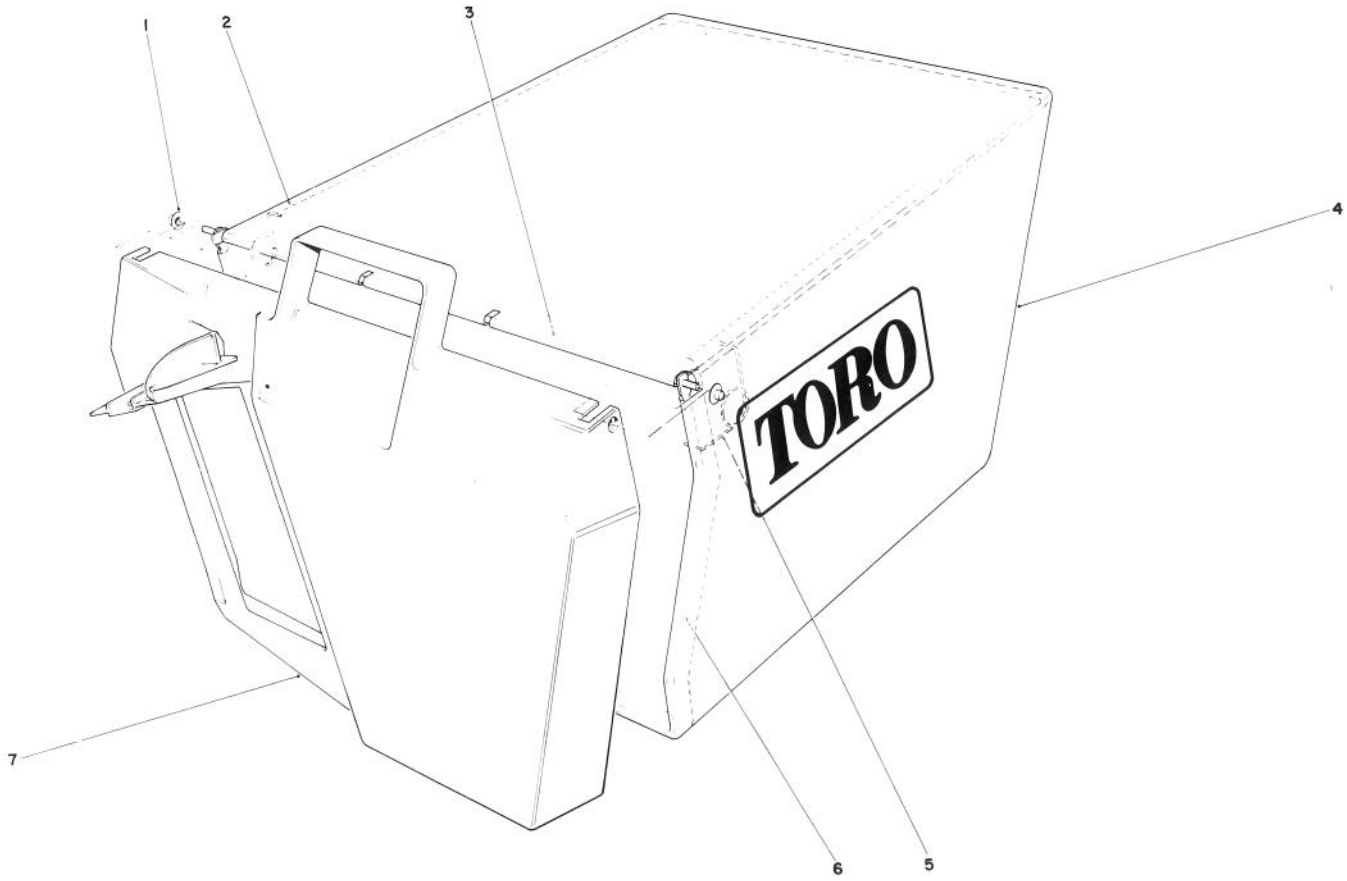

GRASS BAG ASSEMBLY NO. 11-0159

Ref. No.	Part No.	Description	No. Used
1	3290-422	Push Nut	2
2	42-4030	Bag Frame Upper	1
3	33-4820	Hinge Bag Door	1
4	8-2759	Grass Bag	1

Ref. No.	Part No.	Description	No. Used
5	36-6910	Spring	2
6	43-0030	Frame Bag	1
7	36-1331	Door Grass Bag	1

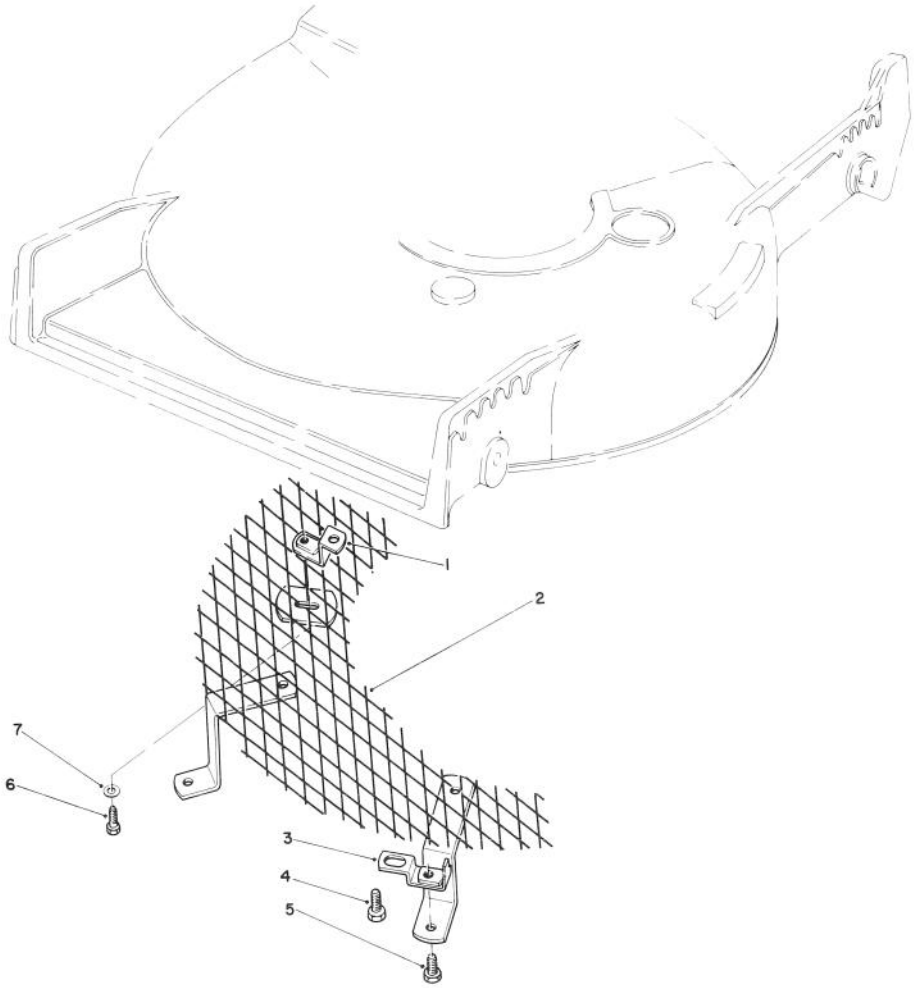

LEAF SHREDDER KIT MODEL NO. 59157 (Optional)

Ref. No.	Part No.	Description	No. Used
1	47-6260	Bracket	1
2	47-6230	Screen	1
3	46-4880	Mounting Bracket	2
4	32144-11	Screw — Self Tapping	3

Ref. No.	Part No.	Description	Ref. No.
5	321-3	Capscrew, Hex Hd.	2
6	321-5	Capscrew, Hex Hd.	1
7	3256-1	Washer	1

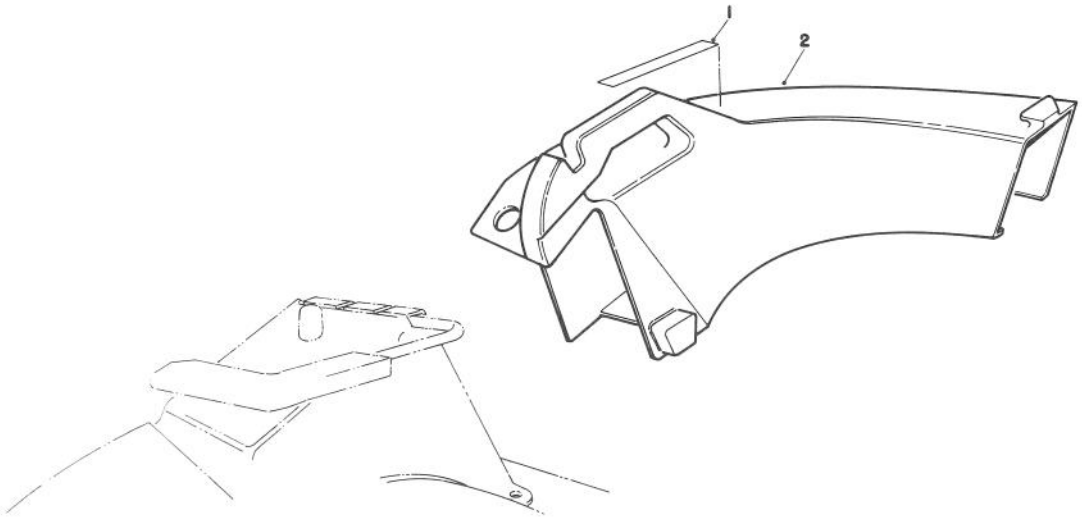

SIDE DISCHARGE CHUTE MODEL NO. 59168 (Optional)

Ref. No.	Part No.	Description	No. Used
1	39-9120	Decal — Caution	1

Ref. No.	Part No.	Description	No. Used
2	13-2239	Discharge Chute (Incl. Ref. #1)	1

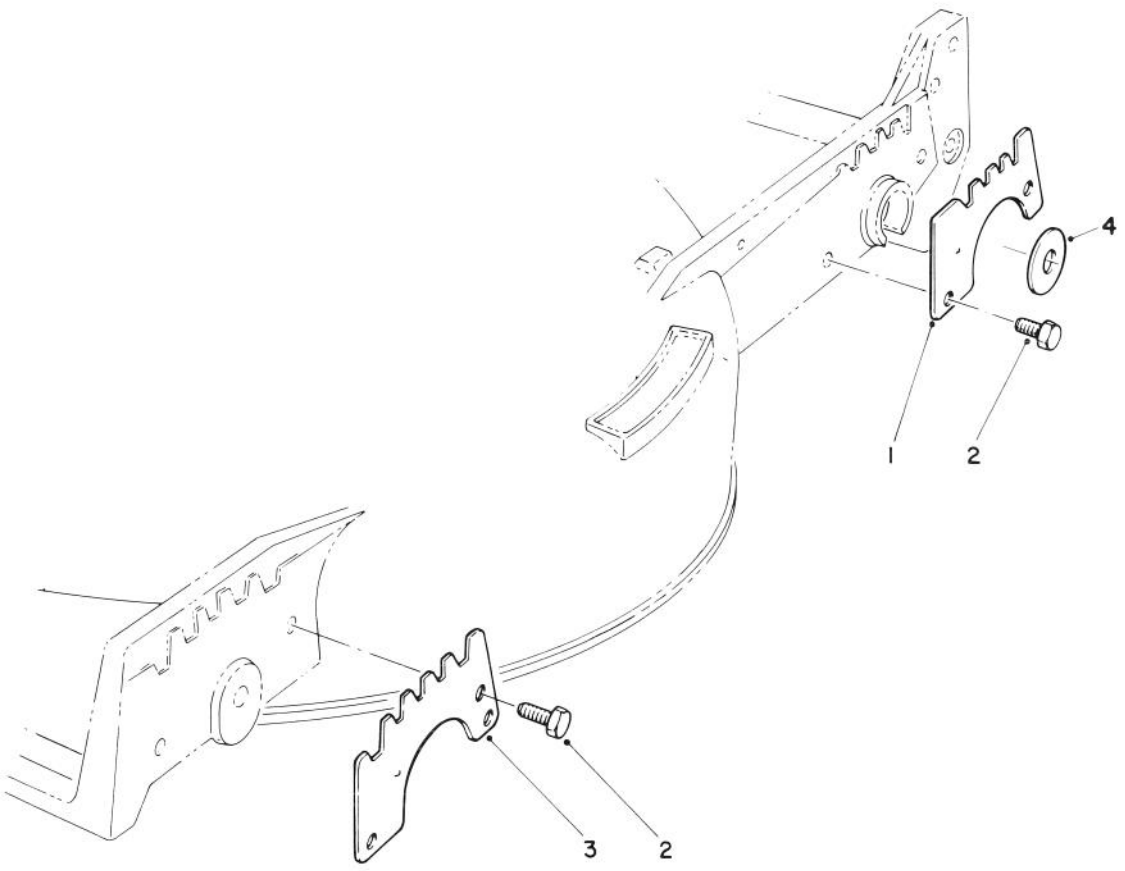

WEAR PLATE KIT NO. 49-4080 (Optional)

Ref. No.	Part No.	Description	No. Used
1	49-4070	Plate — Wear, Rear	2
2	32104-17	Screw — Thread Forming	8

Ref. No.	Part No.	Description	No. Used
3	43-5050	Plate — Wear, Front	2
4	33-0390	Washer	2

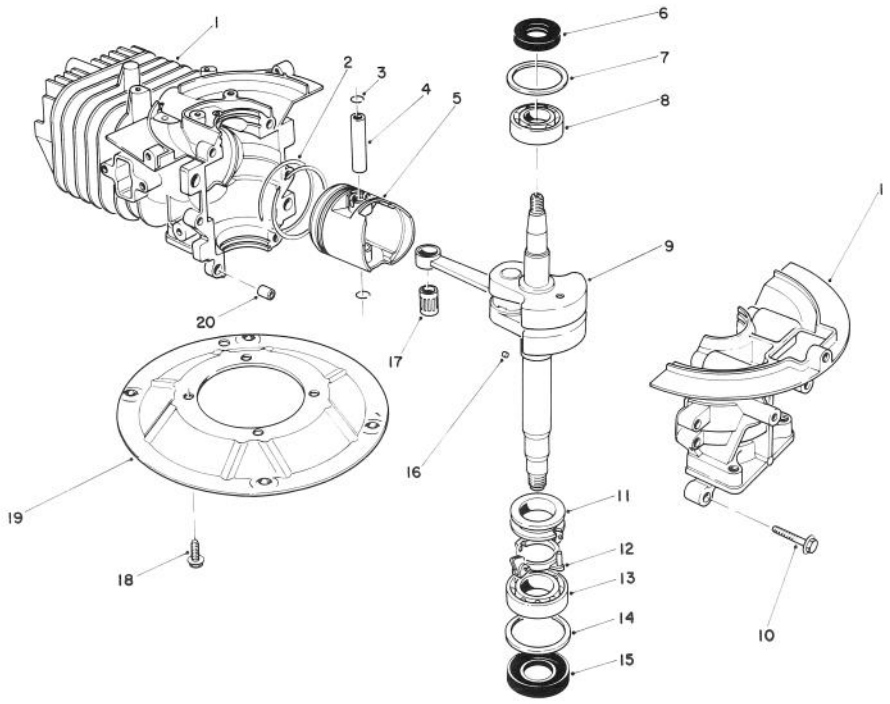

CRANKSHAFT ASSEMBLY
(Engine Model No. 47PH7)

Ref. No.	Part No.	Description	No. Used
1	81-2800	Crankcase/Cylinder Assy.	1
2	81-0590	Ring Set	1
3	81-0620	Circlip	2
4	81-0600	Wrist Pin	1
5	81-0580	Piston — 58 mm	1
6	81-0720	Oil Seal — Upper	1
7	81-0710	Thrust Washer — Upper	1
8	81-0690	Bearing — Upper — 20 mm	1
9	81-4670	Crankshaft/Connecting Rod Assembly	1
10	81-0540	Bolt (30 mm Lg)	6

Ref. No.	Part No.	Description	No. Used
11	81-0770	Collar — Governor	1
12	81-0750	Bracket — Governor Flyweight	1
13	81-0700	Bearing — Lower — 25 mm	1
14	81-0730	Thrust Washer — Lower	1
15	81-0740	Oil Seal — Lower	1
16	81-0760	Pin — Governor	1
17	81-0610	Bearing — Wrist Pin	1
18	81-0570	Bolt	4
19	81-0560	Plate — Mounting	1
20	81-0520	Pin — Crankcase Dowel	2
*	12-7719	Short Block Assembly	1

*Not Illustrated

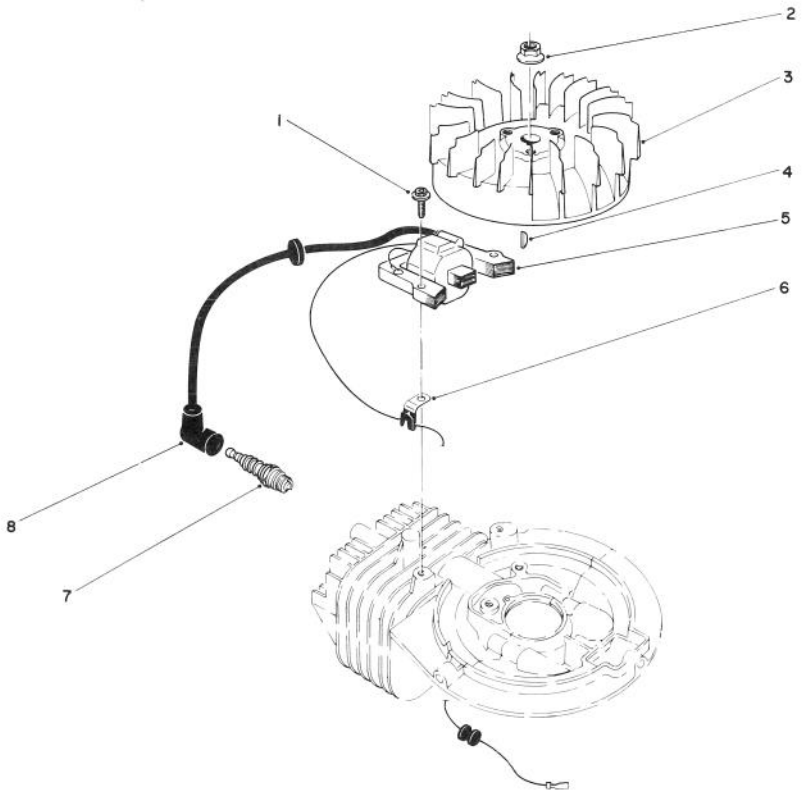

FLYWHEEL & MAGNETO ASSEMBLY
(Engine Model No. 47PH7)

Ref. No.	Part No.	Description	No. Used
1	81-2050	Capscrew — Allenhead	2
2	81-1330	Nut	1
3	81-2810	Flywheel — Magneto	1
4	81-2370	Key — Flywheel	1
5	81-2820	Coil/Ignition Assembly	1

Ref. No.	Part No.	Description	No. Used
6	81-1480	Clamp	1
7	81-0181	Spark Plug	1
8	81-1500	Cover — Spark Plug	1
*	41-7650	Puller — Flywheel	1

*Not Illustrated

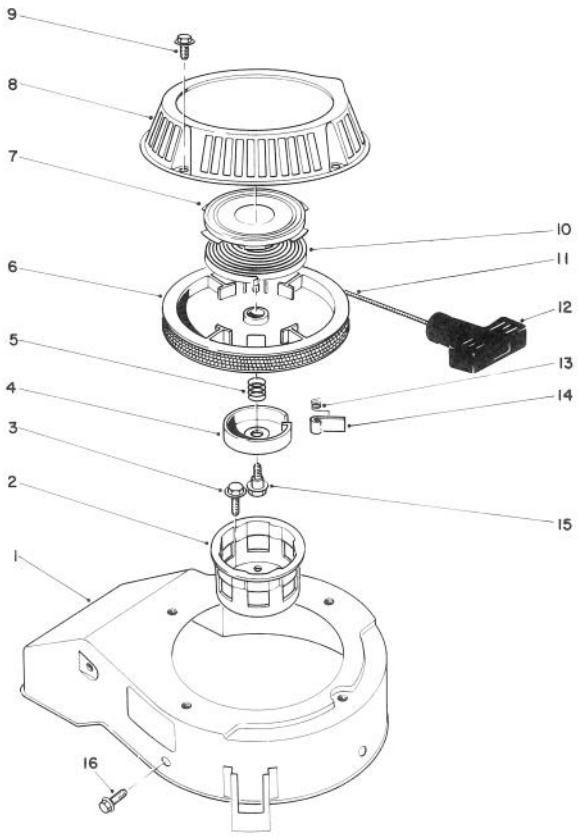

RECOIL ASSEMBLY
(Engine Model No. 47PH7)

Ref. No.	Part No.	Description	No. Used
1	81-2070	Cover — Cooling Fan	1
2	81-1290	Pulley — Starter Cup	1
3	81-1300	Bolt (16 mm Lg.)	3
4	81-1250	Retainer — Dog	1
5	81-1240	Spring — Compression	1
6	81-1210	Reel — Rope Pulley	1
7	81-1640	Retainer Cup — Recoil Spring	1
8	81-2090	Case — Recoil	1
9	81-1280	Bolt	4
10	81-1200	Spring — Recoil	1
11	81-1270	Rope	1
12	81-1630	Handle — Recoil	1
13	81-1220	Spring — Dog	1
14	81-1230	Dog	1
15	81-1260	Bolt — Shoulder	1
16	81-1170	Bolt — Self Tapping (15 mm Lg.)	3
*	81-5480	Starter Assembly (Incl. Ref. #4-15)	1
*	81-2300	Spring and Retainer (Incl. Ref. #7 & 10)	1

*Not Illustrated

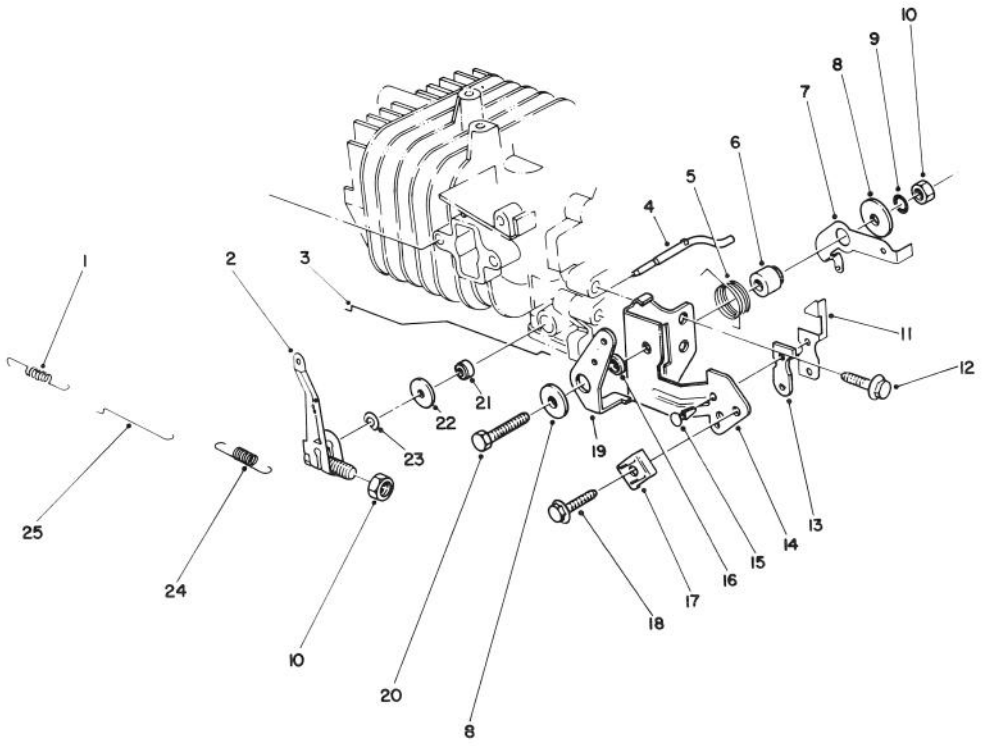

GOVERNOR ASSEMBLY
(Engine Model No. 47PH7)

Ref. No.	Part No.	Description	No. Used
1	81-0920	Spring — Carburetor Rod	1
2	81-5420	Governor Arm/Bolt Assembly	1
3	81-5410	Rod — Choke	1
4	81-0840	Shaft — Governor	1
5	81-2460	Spring — Choke Control Lever	1
6	81-1770	Spacer — Governor Spring Lever	1
7	81-2850	Lever — Governor Spring	1
8	81-1750	Washer — Choke Control Lever	2
9	81-1450	Washer — Lock	1
10	81-0900	Nut	2
11	81-1840	Terminal — Kill Switch	1
12	81-1170	Bolt — Self Tapping (15 mm Lg.)	1

Ref. No.	Part No.	Description	No. Used
13	81-1830	Insulator — Kill Switch	1
14	81-2420	Bracket — Throttle Control	1
15	81-1850	Rivet — Kill Switch	2
16	81-2470	Spacer — Choke Control Lever	1
17	81-2430	Clamp — Cable	1
18	50-0130	Bolt — Cable Clamp	1
19	81-1710	Lever — Choke Control	1
20	81-1730	Bolt — Throttle Control Bracket	1
21	81-0850	Oil Seal — Governor Shaft	1
22	81-0860	Washer	1
23	81-0870	E-Ring	1
24	81-2830	Spring — Governor	1
25	81-0910	Rod — Carburetor	1

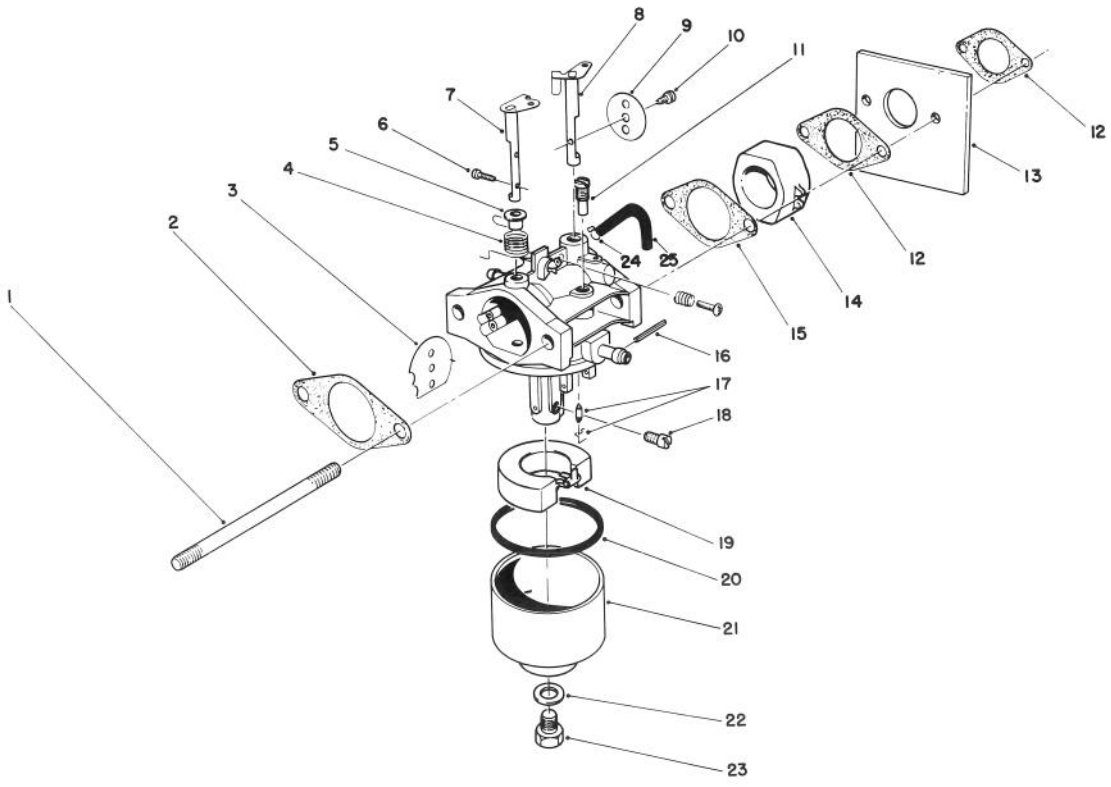

CARBURETOR ASSEMBLY
(Model No. 47PH7)

Ref. No.	Part No.	Description	No. Used
1	81-5450	Stud Bolt — Carburetor	2
2	81-0090	Gasket	1
3	81-0240	Valve — Choke	1
4	81-0230	Spring — Choke	1
5	81-0220	Bushing — Choke Valve	1
6	81-2160	Screw	2
7	81-1950	Shaft — Choke	1
8	81-0250	Shaft — Throttle	1
9	81-0260	Valve — Throttle	1
10	81-0270	Screw — Throttle Valve	1
11	81-1030	Jet — Pilot #(40)	1
12	81-2320	Gasket — Shield	2
13	81-5490	Shield — Carburetor	1
14	81-5440	Insulator — Carburetor	1
15	81-0780	Gasket	1
16	81-0980	Pin	1

Ref. No.	Part No.	Description	No. Used
17	81-4910	Needle Valve/Spring Wire	1
18	81-1060	Jet — Main #(75)	1
*	81-2340	Jet — Main #(72.5) High Alt., Above 6,000 (Optional)	1
19	81-0970	Float	1
20	81-1010	Gasket — Float Bowl	1
21	81-1610	Bowl — Float	1
22	81-1020	Gasket — Bowl Screw	1
23	81-1000	Screw — Bowl	1
*	12-6379	Carburetor Kit (Incl. Ref. #2, 15, 17, 20 & 22)	1
*	81-5430	Carburetor Assembly — Complete	1
24	81-5460	Clamp — Vent Tube	1
25	81-5470	Tube — Vent	1

*Not Illustrated

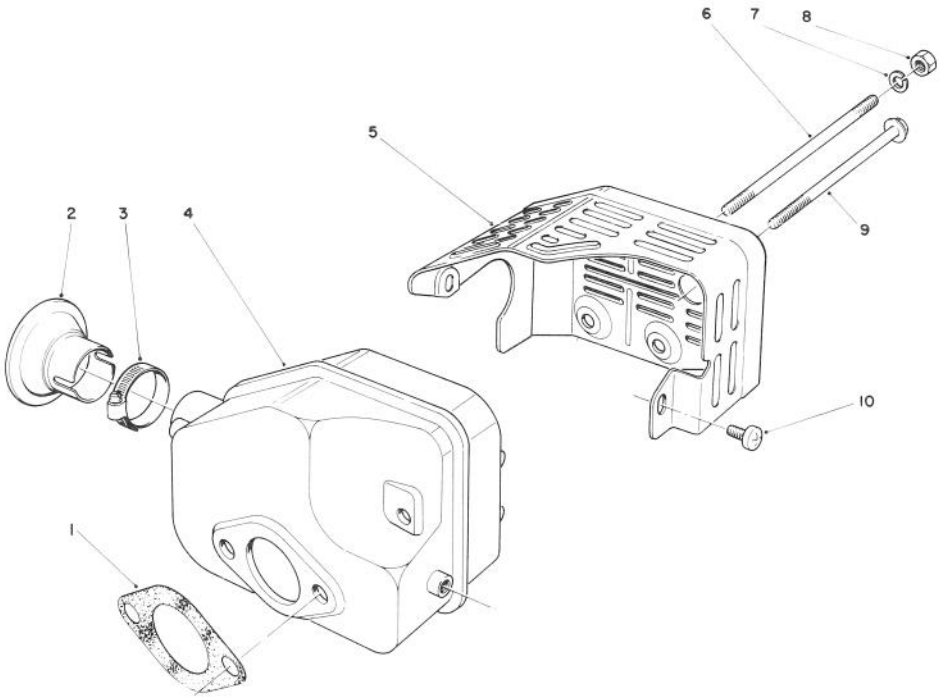

MUFFLER ASSEMBLY
(Engine Model No. 47PH7)

Ref. No.	Part No.	Description	No. Used
1	81-1080	Gasket — Muffler	1
2*	81-0200	Spark Arrester	1
3†		Clamp	1
4	81-1090	Muffler	1
5	81-2450	Cover — Muffler	1

Ref. No.	Part No.	Description	No. Used
6	81-1100	Bolt	2
7	81-1120	Washer — Lock	2
8	81-1110	Nut	2
9	81-1150	Bolt — Self Tapping	1
10	81-1140	Screw — Phillips Hd.	2

*Optional Equipment
†Obtain Locally