Form Number 3354-332 Rev A

# 53cm Recycler®
## Rear Bagging Lawnmower

**Model No. 22176TE - 260000001 and up.**

# Parts Catalog

**Ordering Replacement Parts**
To order replacement parts, please supply the part number, the quantity, and the description of each part desired.

**Understanding Reference Numbers**
Each Identified part in an illustration has a reference number. The reference number for a part also appears in the parts list, along with other information about the part.

This catalog uses two special reference number formats, one to indicate parts in a service assembly and another to indicate the quantity of a given part in an illustration.

**Service Assembly Reference Numbers**
Parts in service assemblies have reference numbers in the form a:b. The a represents the reference number of the entire service assembly and the b represents a sequential number unique to each part within the service assembly.

For example, a wheel assembly might be identified by reference number 6, the tire by 6:1, the valve by 6:2, and the wheel by 6:3. When you order the assembly identified by reference number 6, you receive all parts identified by reference numbers 6:1, 6:2, and 6:3. However, you may also order any part individually. Reference numbers of this type appear in illustrations and in part lists.

**Reference Numbers Indicating Quantity**
In an illustration, if a reference number indicates more than one part, the reference number has the form nX y. The n represents the quantity of the part, the X is the multiplication symbol, and the y represents the reference number.

For example, in an illustration, the reference number 2X 37 means that two of the parts identified by reference number 37 are indicated.

© The Toro Company - 2006
All Rights Reserved

Register your product at www.Toro.com

# Contents


| Description | Page |
|---|---|
| Housing, Chute and Wheel Assembly | 3 |
| Housing Assembly No. 98-7142 | 4 |
| Front Wheel and Tire Assembly No. 100-2870 | 5 |
| Gear Case Assembly No. 74-1861 | 6 |
| Engine, Fuel Tank and Blade Assembly | 7 |
| Handle Assembly | 8 |
| Rear Drive and Wheel Assembly | 9 |
| Rear Wheel Assembly No. 100-2860 | 10 |
| Grass Bag Assembly No. 106-0975 | 11 |
| Cylinder and Crankcase Assembly | 12 |
| Piston and Crankshaft Assembly | 13 |
| Valve and Camshaft Assembly | 14 |
| Lubrication Equipment Assembly | 15 |
| Cooling Equipment Assembly | 16 |
| Electrical Equipment Assembly | 17 |
| Control Equipment Assembly | 18 |
| Carburetor Assembly | 19 |
| Air Filter and Muffler Assembly | 20 |
| Starter Assembly | 21 |
| Brake and Lever Assembly | 22 |


# Part Description Abbreviations

Part descriptions in this catalog may include the following abbreviations.

| | |
|---|---|
| AR | as required |
| ASM | assembly |
| BBC | blade brake clutch |
| CARR | carriage |
| DEG | degrees |
| EXT | external |
| FH | flat head |
| GA | gauge |
| HF | hex flange |
| HH | hex head |
| HHF | hex head flange |
| HHFTF | hex head flange thread forming |
| HJ | hex jam |
| HLH | hex lag head |
| HOC | height-of-cut |
| HSBH | hex socket button head |
| HSFH | hex socket flat head |
| HSH | hex socket head |
| HWH | hex washer head |
| HWHTF | hex washer head thread forming |
| HYD | hydraulic |
| INC | incorporated |
| LH | left hand |
| NI | nylon insert |
| NPTF | national pipe thread fine |
| PFH | phillips flat head |
| PPH | phillips pan head |
| PPHTF | phillips pan head thread forming |
| PRH | phillips round head |
| PTH | phillips truss head |
| PTO | power-take-off |
| RH | right hand |
| ROPS | roll-over-protection-system |
| SFH | slotted fillister head |
| SHH | slotted hex head |
| SHWH | slotted hex washer head |
| SPH | slotted pan head |
| SQH | square head |
| SRH | slotted round head |
| STD | standard |
| TAP | self tapping |
| TTH | torx truss head |

# Footnotes

❶ Not illustrated

❷ Not serviced separately

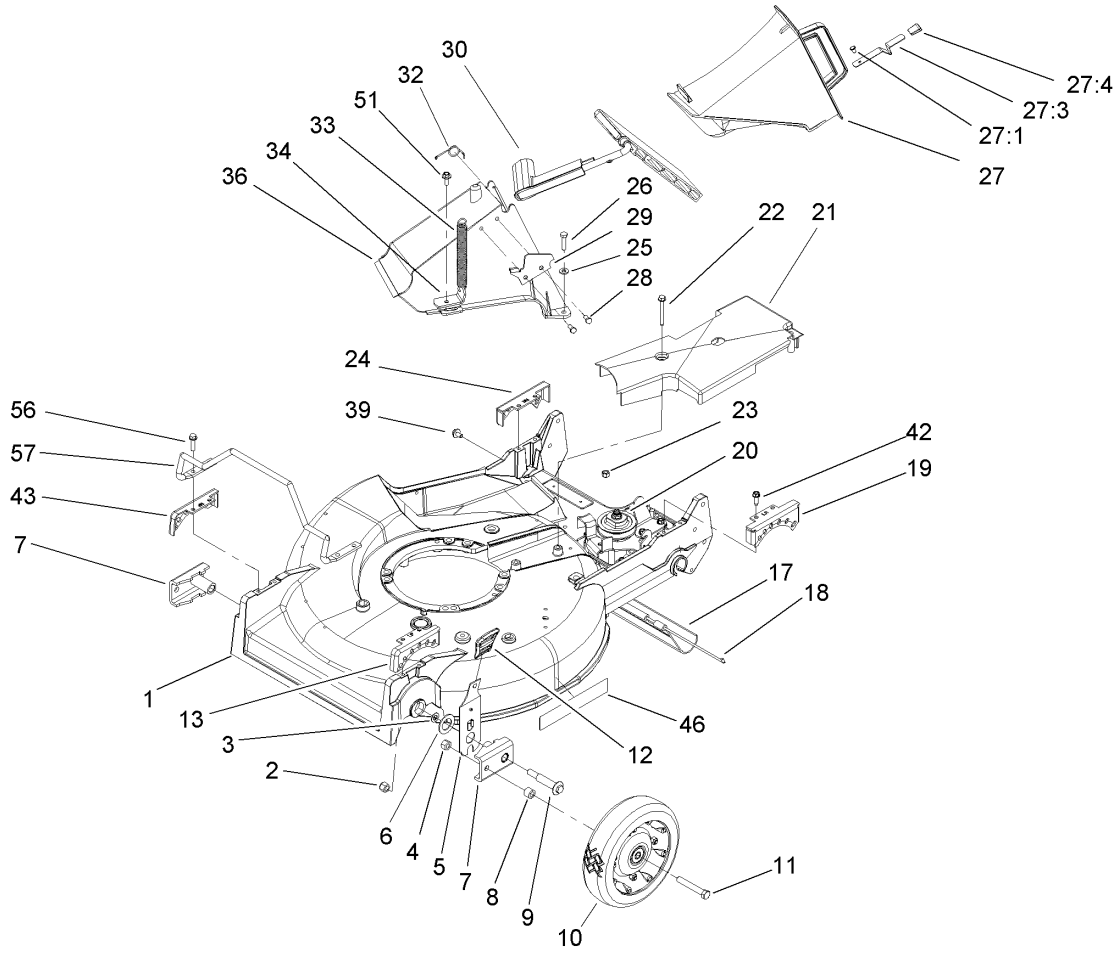


# Housing, Chute and Wheel Assembly

| Ref | Part No. | Qty. | Description |
|---|---|---|---|
| 1 | 98-7142 | 1 | Housing |
| 2 | 3296-6 | 2 | Nut-Lock |
| 3 | 40-1940 | 2 | Washer |
| 4 | 32152-2 | 2 | Nut-Lock, Cone |
| 5 | 110-0537 | 2 | Spring Arm ASM |
| 6 | 257-3 | 2 | Washer-Thrust |
| 7 | 61-8300 | 2 | Arm-Pivot, Front |
| 8 | 52-2480 | 2 | Spacer-Wheel |
| 9 | 27-6232 | 2 | Bolt-Wheel |
| 10 | 100-2870 | 2 | Wheel And Tire ASM |
| 11 | 323-12 | 2 | Screw-HH |
| 12 | 110-0549 | 2 | Knob-HOC |
| 13 | 49-8760 | 1 | Quadrant-Front, LH |
| 17 | 44-0580 | 1 | Shield-Trailing |
| 18 | 33-3208 | 1 | Rod-Shield |
| 19 | 49-8740 | 1 | Quadrant-Rear, LH |
| 20 | 74-1861 | 1 | Gear Case ASM |
| 21 | 74-1770 | 1 | Cover-Belt |
| 22 | 37-7260 | 2 | Screw-HH |
| 23 | 3296-42 | 2 | Nut-Lock, NI |
| 24 | 49-8750 | 1 | Quadrant-Rear, RH |
| 25 | 3256-22 | 2 | Washer-Flat |
| 26 | 321-8 | 2 | Screw-HH |
| 27 | 77-0502 | 1 | Discharge Plug ASM |

| Ref | Part No. | Qty. | Description |
|---|---|---|---|
| 27:1 | 3295-35 | 1 | Rivet-Head, Flat |
| 27:3 | 76-4640 | 1 | Latch-Plug, Discharge |
| 27:4 | 76-4650 | 1 | Grip-Latch |
| 28 | 46-8090 | 2 | Screw-Plastite |
| 29 | 93-3154 | 1 | Latch-Plate |
| 30 | 93-7351 | 1 | Discharge Door ASM |
| 32 | 80-3770 | 1 | Retainer-Door |
| 33 | 76-4660 | 1 | Spring-Door |
| 34 | 71-9350 | 1 | Bracket-Spring |
| 36 | 82-9151 | 1 | Tunnel-Discharge |
| 39 | 46-6810 | 1 | Screw And Washer ASM |
| 42 | 49-2040 | 4 | Screw-HWHTF |
| 43 | 49-8770 | 1 | Quadrant-Front, RH |
| 46 | 106-0689 | 1 | Decal |
| 51 | 46-6811 | 1 | Screw-HWH |
| 56 | 32144-86 | 4 | Screw-HWHTF |
| 57 | 99-6722 | 1 | Guard-Engine |

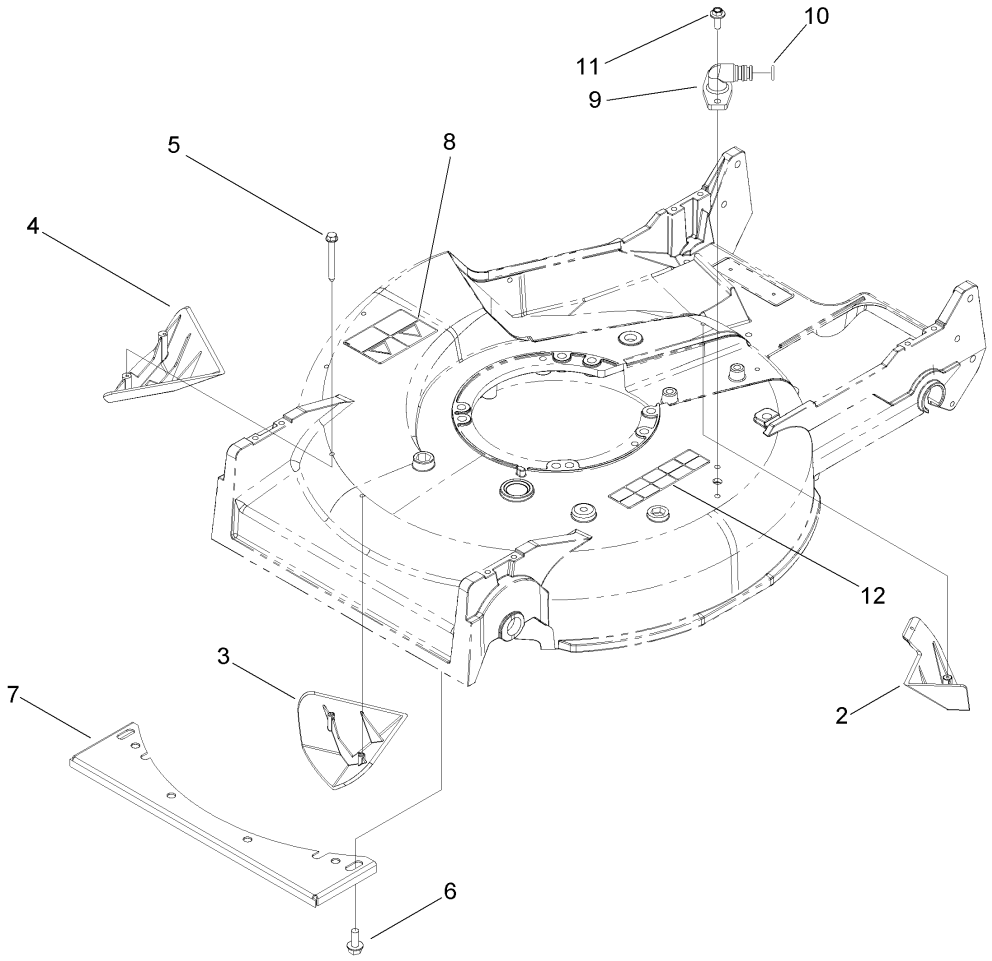


# Housing Assembly No. 98-7142

| Ref | Part No. | Qty. | Description |
|---|---|---|---|
| 2 | 92-1750 | 1 | Kicker-Rear |
| 3 | 92-1720 | 1 | Kicker-Front |
| 4 | 92-1730 | 1 | Kicker-RH |
| 5 | 32144-111 | 6 | Screw-PPH |
| 6 | 32144-70 | 4 | Screw-HH |
| 7 | 46-5400-03 | 1 | Shield |
| 8 | 93-6654 | 1 | Decal-Danger |
| 9 | 95-2747 | 1 | Fitting-Washout |
| 10 | 46-6290 | 1 | O-Ring |
| 11 | 46-6811 | 2 | Screw-HWH |
| 12 | 93-6657 | 1 | Decal-Danger |

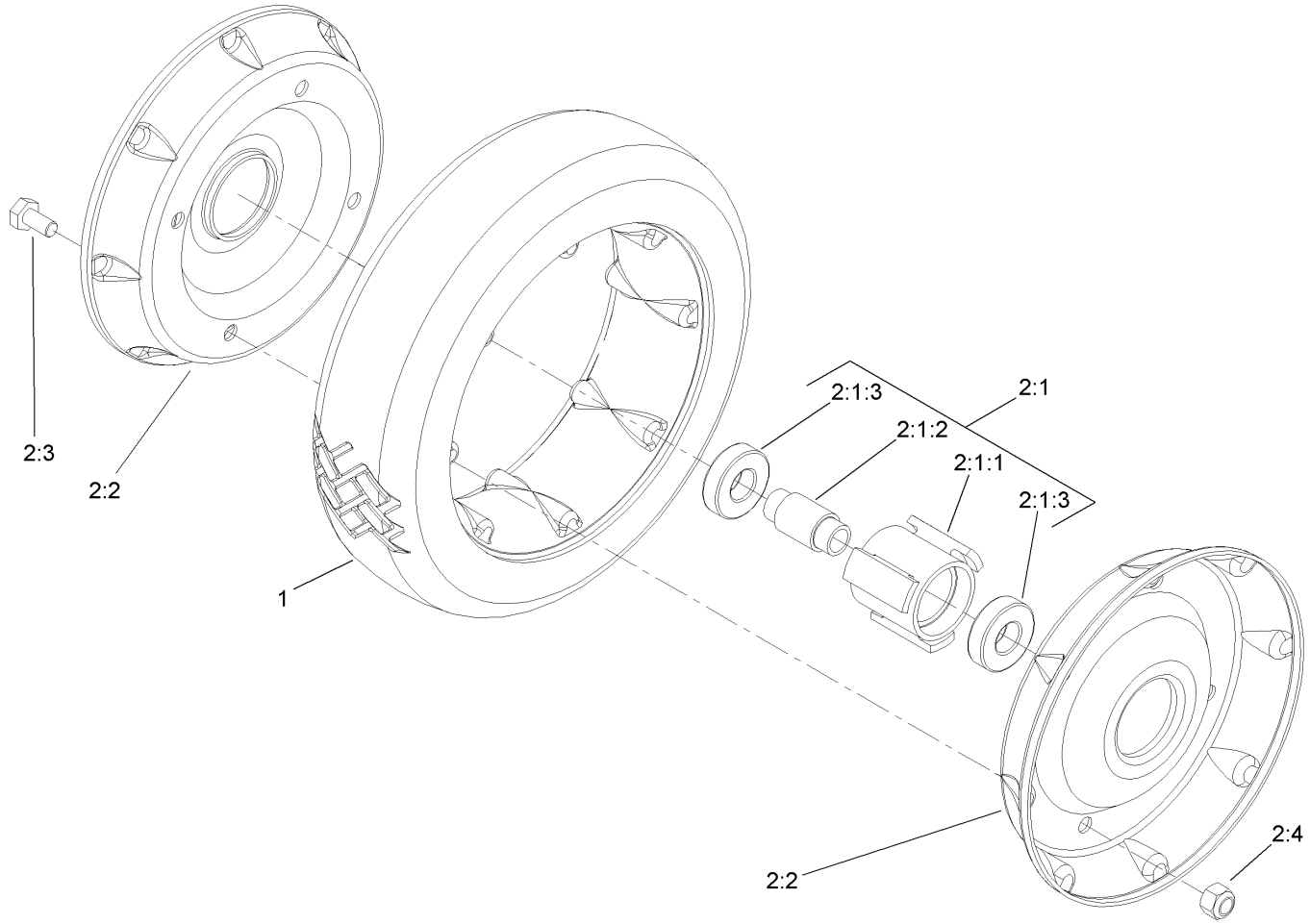


# Front Wheel and Tire Assembly No. 100-2870

| Ref | Part No. | Qty. | Description |
|---|---|---|---|
| 1 | 53-7740 | 1 | Tire |
| ❷2 | | 1 | Wheel ASM |
| ❷2:1 | | 1 | Hub And Bearing ASM |
| 2:1:1 | 52-2410 | 1 | Hub-Bearing |
| 2:1:2 | 52-2440 | 1 | Spacer-Bearing |
| 2:1:3 | 52-2450 | 2 | Bearing-Wheel |
| 2:2 | 53-7780-06 | 2 | Plate-Wheel, Half |
| 2:3 | 321-2 | 4 | Screw-HH |
| 2:4 | 3296-42 | 4 | Nut-Lock, NI |

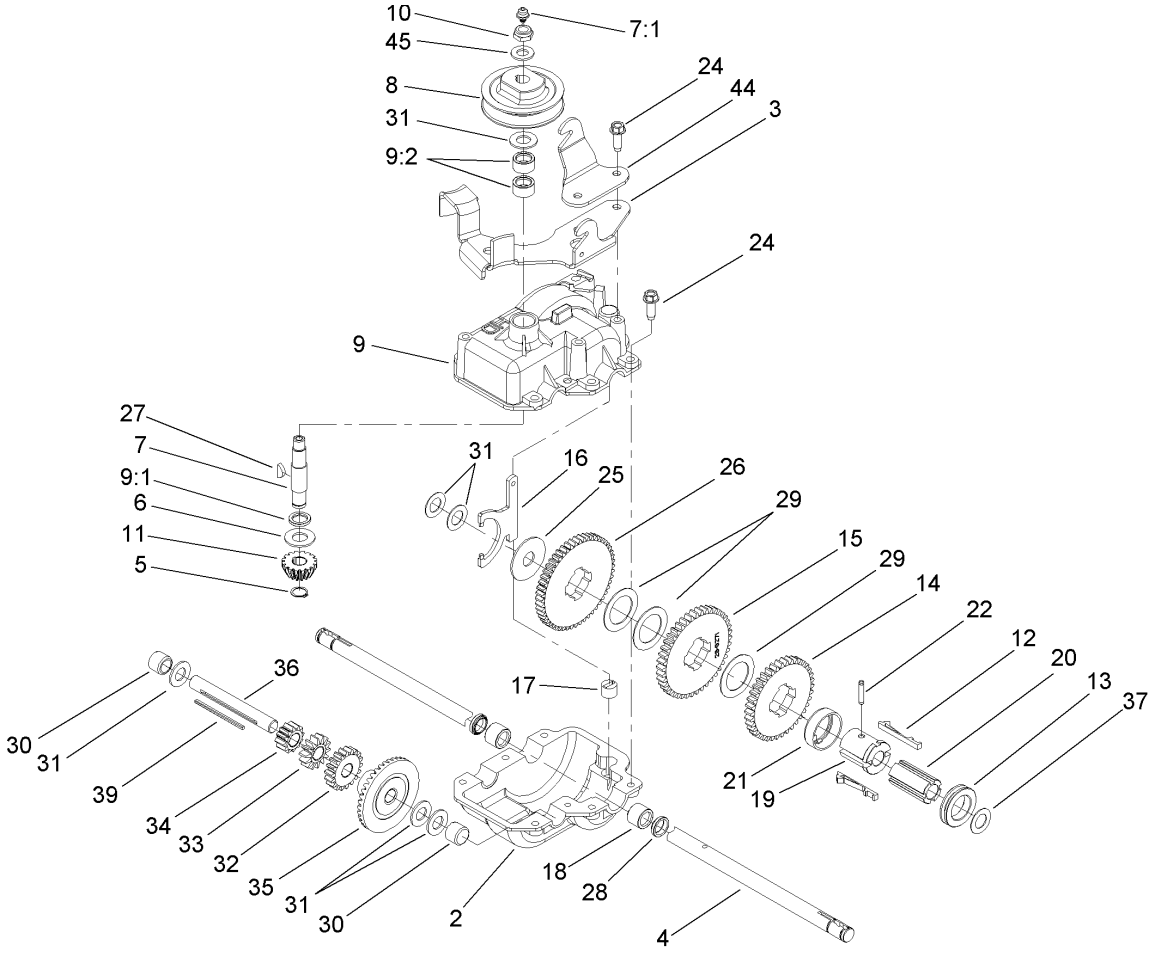


# Gear Case Assembly No. 74-1861

| Ref | Part No. | Qty. | Description |
|---|---|---|---|
| 2 | 74-1920 | 1 | Case-Gear, Lower |
| 3 | 49-8461-03 | 1 | Bracket-Guide, Belt |
| 4 | 74-1890 | 1 | Shaft-Output |
| 5 | 32151-57 | 1 | Ring-Retaining |
| 6 | 47-2910 | 1 | Washer-Thrust |
| 7 | 13-5149 | 1 | Input Shaft ASM |
| 7:1 | 302-63 | 1 | Zerk |
| 8 | 39-6740 | 1 | Pulley |
| 9 | 13-9739 | 1 | Upper Gearcase ASM |
| 9:1 | 47-7260 | 1 | Seal |
| 9:2 | 47-7270 | 2 | Bearing |
| 10 | 3296-5 | 1 | Nut-Lock |
| 11 | 39-6660 | 1 | Pinion-Bevel |
| 12 | 29-9330 | 2 | Key-Shift |
| 13 | 29-9340 | 1 | Collar-Shift |
| 14 | 42-4740 | 1 | Gear-38T |
| 15 | 29-9271 | 1 | Gear-42T |
| 16 | 60-8870 | 1 | Yoke-Shift |
| 17 | 29-9570 | 1 | Bushing-Yoke |
| 18 | 47-6730 | 2 | Seal-Oil |
| 19 | 55-8010 | 1 | Sleeve-Gear |
| 20 | 39-6720 | 1 | Sleeve |
| 21 | 55-8020 | 1 | Retainer-Key |
| 22 | 3285-19 | 1 | Pin-Groove |

| Ref | Part No. | Qty. | Description |
|---|---|---|---|
| 24 | 49-2040 | 6 | Screw-HWHTF |
| 25 | 29-9690 | 1 | Washer |
| 26 | 46-3560 | 1 | Gear |
| 27 | 3257-1 | 2 | Key-Woodruff |
| 28 | 48-2060 | 2 | Bearing-Roller |
| 29 | 36-4770 | 3 | Washer |
| 30 | 252-103 | 2 | Bearing-Closed |
| 31 | 36-4792 | 4 | Washer-Thrust |
| 32 | 39-6650 | 1 | Gear-18T |
| 33 | 46-3550 | 1 | Gear-14T |
| 34 | 46-3540 | 1 | Gear-12T |
| 35 | 74-1760 | 1 | Gear-Bevel |
| 36 | 53-7950 | 1 | Shaft-Intermediate |
| 37 | 36-4780 | 3 | Washer |
| 39 | 39-7842 | 1 | Key |
| 44 | 74-1750-03 | 1 | Bracket-Engage, Traction |
| 45 | 3256-45 | 1 | Washer-Flat |

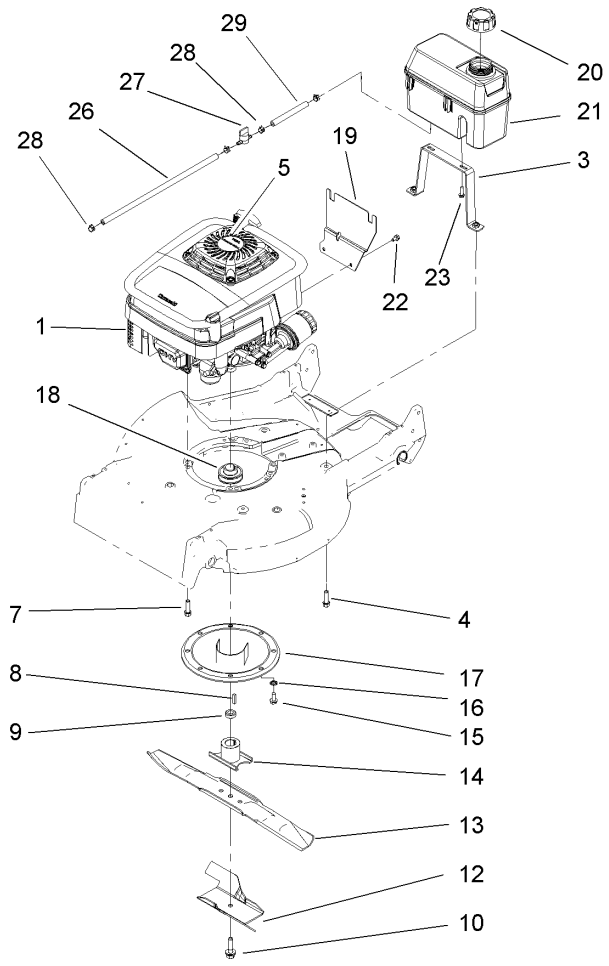


# Engine, Fuel Tank and Blade Assembly

| Ref | Part No. | Qty. | Description |
|---|---|---|---|
| ❷1 | | 1 | Engine ASM |
| 3 | 107-4131-03 | 1 | Tank Base |
| 4 | 95-1727 | 2 | Screw-Taptite |
| 5 | 110-0520 | 1 | Decal |
| 7 | 95-1727 | 4 | Screw-Taptite |
| 8 | 5-1077 | 1 | Key-Square |
| 9 | 103-3795 | 1 | Spacer-Retainer, Blade |
| 10 | 105-8579 | 1 | Bolt-Blade |
| 12 | 92-1599-03 | 1 | Stiffener-Blade |
| 13 | 91-2256-03 | 1 | Blade-21 Inch |
| 14 | 52-2170 | 1 | Retainer-Blade |
| 15 | 32144-70 | 3 | Screw-HH |
| 16 | 3254-6 | 3 | Washer-Lock, Internal |
| 17 | 65-5860 | 1 | Protector-Crankshaft |
| 18 | 46-7910 | 1 | Pulley-Driver |
| 19 | 106-0908-03 | 1 | Bracket-Tank |
| 20 | 93-7198 | 1 | Gas Cap ASM |
| 21 | 106-0625 | 1 | Tank-Fuel |
| 22 | 104-2628 | 3 | Screw-HWH |
| 23 | 46-8091 | 2 | Screw-HWH |
| 26 | 109-0296 | 1 | Hose-Fuel |
| 27 | 1-603770 | 1 | Valve-Fuel |
| 28 | 2412-98 | 4 | Clamp |
| 29 | 109-0650 | 1 | Hose-Fuel |

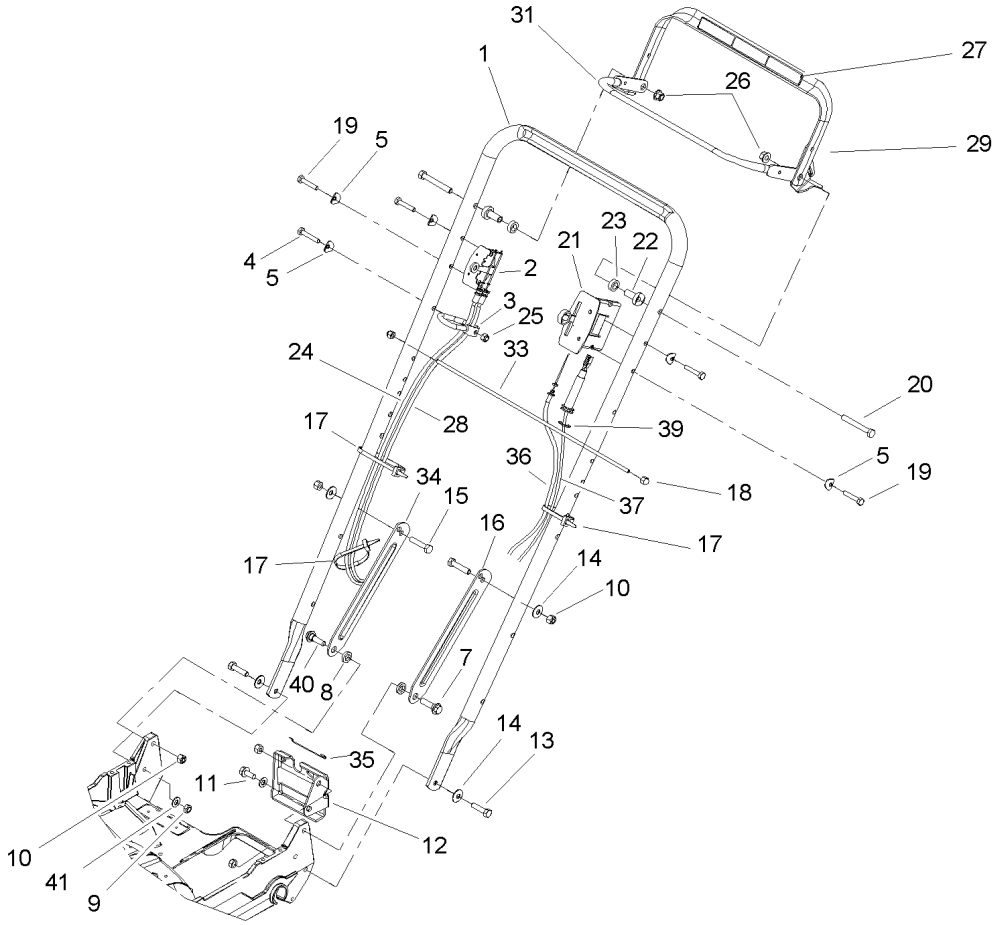


# Handle Assembly

| Ref | Part No. | Qty. | Description |
|---|---|---|---|
| 1 | 99-2545-03 | 1 | Handle-Proline |
| 2 | 99-2544 | 1 | Control-Shift |
| 3 | 46-8081 | 1 | Guide-Rope |
| 4 | 321-9 | 1 | Screw-HH |
| 5 | 3-7501 | 5 | Washer |
| 7 | 27-7210 | 1 | Screw-Shoulder |
| 8 | 3-3287 | 2 | Spacer-Latch, Handle |
| 9 | 3296-47 | 2 | Nut-Lock, NI |
| 10 | 3296-29 | 4 | Nut-Lock, NI |
| 11 | 32144-70 | 1 | Screw-HH |
| 12 | 74-1741 | 1 | Bracket-Adjustment, Traction |
| 13 | 322-6 | 2 | Screw-HH |
| 14 | 3290-456 | 4 | Washer-Belleville |
| 15 | 322-7 | 2 | Screw-HH |
| 16 | 100-3298-03 | 1 | Latch-Handle, LH |
| 17 | 3290-378 | 3 | Tie-Cable |
| 18 | 32111-7 | 2 | Nut-Cap |
| 19 | 321-13 | 4 | Screw-HH |
| 20 | 322-12 | 2 | Screw-HH |
| 21 | 108-2645 | 1 | Control-Head, Throttle |
| 22 | 49-1631 | 2 | Spacer-Support |
| 23 | 256-276 | 2 | Spacer-Nylon |
| 24 | 107-4081 | 1 | Cable-Brake |
| 25 | 3296-42 | 1 | Nut-Lock, NI |

| Ref | Part No. | Qty. | Description |
|---|---|---|---|
| 26 | 3296-58 | 2 | Nut-Lock, NI |
| 27 | 94-6046 | 1 | Decal-Operation |
| 28 | 99-2543 | 1 | Cable-Shift |
| 29 | 94-4371-03 | 1 | Traction Bail ASM |
| 31 | 94-4370-03 | 1 | Brake Bail ASM |
| 33 | 48-2810 | 1 | Rod-Support, Bag |
| 34 | 100-3297-03 | 1 | Latch-Handle, RH |
| 35 | 46-7030 | 1 | Retainer-Cable |
| 36 | 74-1791 | 1 | Cable-Traction |
| 37 | 106-0888 | 1 | Throttle Cable ASM |
| 39 | 32151-86 | 4 | E-Ring |
| 40 | 27-7211 | 1 | Screw-Shoulder |
| 41 | 3256-23 | 2 | Washer-Flat |

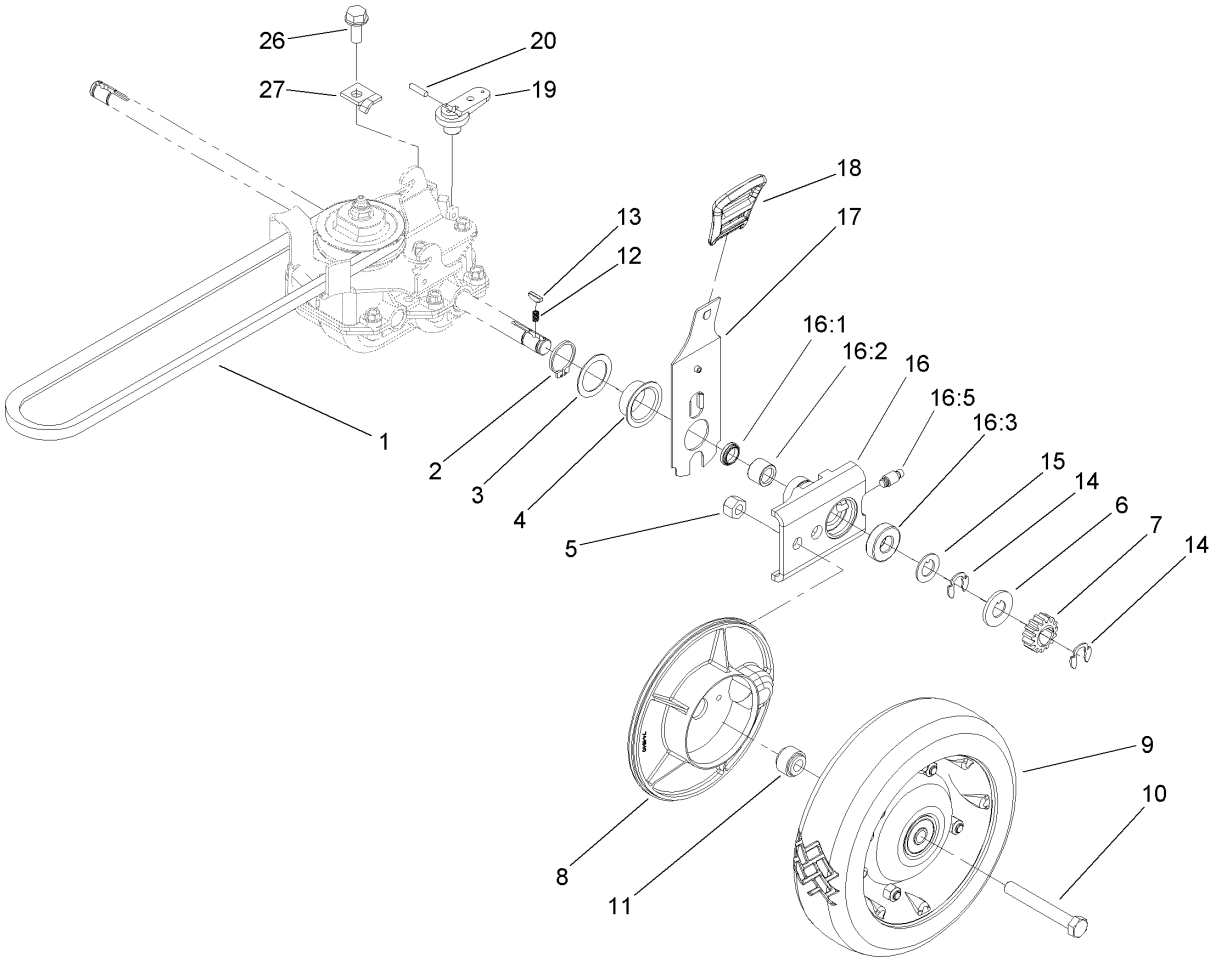


# Rear Drive and Wheel Assembly

| Ref | Part No. | Qty. | Description |
|---|---|---|---|
| 1 | 36-8070 | 1 | V-Belt |
| 2 | 32151-36 | 2 | Ring-Retaining |
| 3 | 74-1810 | 2 | Washer |
| 4 | 48-2170 | 2 | Cap-End |
| 5 | 32152-2 | 2 | Nut-Lock, Cone |
| 6 | 62-3830 | 2 | Washer-Thrust, Outer |
| 7 | 39-9160 | 2 | Gear-Pinion |
| 8 | 74-1640 | 2 | Cover-Wheel |
| 9 | 100-2860 | 2 | Wheel And Tire ASM |
| 10 | 323-13 | 2 | Screw-HH |
| 11 | 74-1650 | 2 | Spacer-Cover, Wheel |
| 12 | 39-9650 | 2 | Spring-Compression |
| 13 | 612066 | 2 | Key |
| 14 | 32151-68 | 4 | Ring-Retaining |
| 15 | 49-7700 | 2 | Washer-Thrust, Outer |
| 16 | 74-1851 | 2 | Pivot Arm ASM |
| 16:1 | 47-6730 | 1 | Seal-Oil |
| 16:2 | 48-2060 | 1 | Bearing-Roller |
| 16:3 | 52-2450 | 1 | Bearing-Wheel |
| 16:5 | 92-6316 | 1 | Zerk |
| 17 | 110-0538 | 2 | Rear Spring Arm ASM |
| 18 | 110-0549 | 2 | Knob-HOC |
| 19 | 29-9560 | 1 | Lever-Shift |
| 20 | 32121-99 | 1 | Pin-Coil |

| Ref | Part No. | Qty. | Description |
|---|---|---|---|
| 26 | 32144-70 | 1 | Screw-HH |
| 27 | 62-3720 | 1 | Clamp-Cable |
| ❶99 | 106-0975 | 1 | Grass Bag ASM |

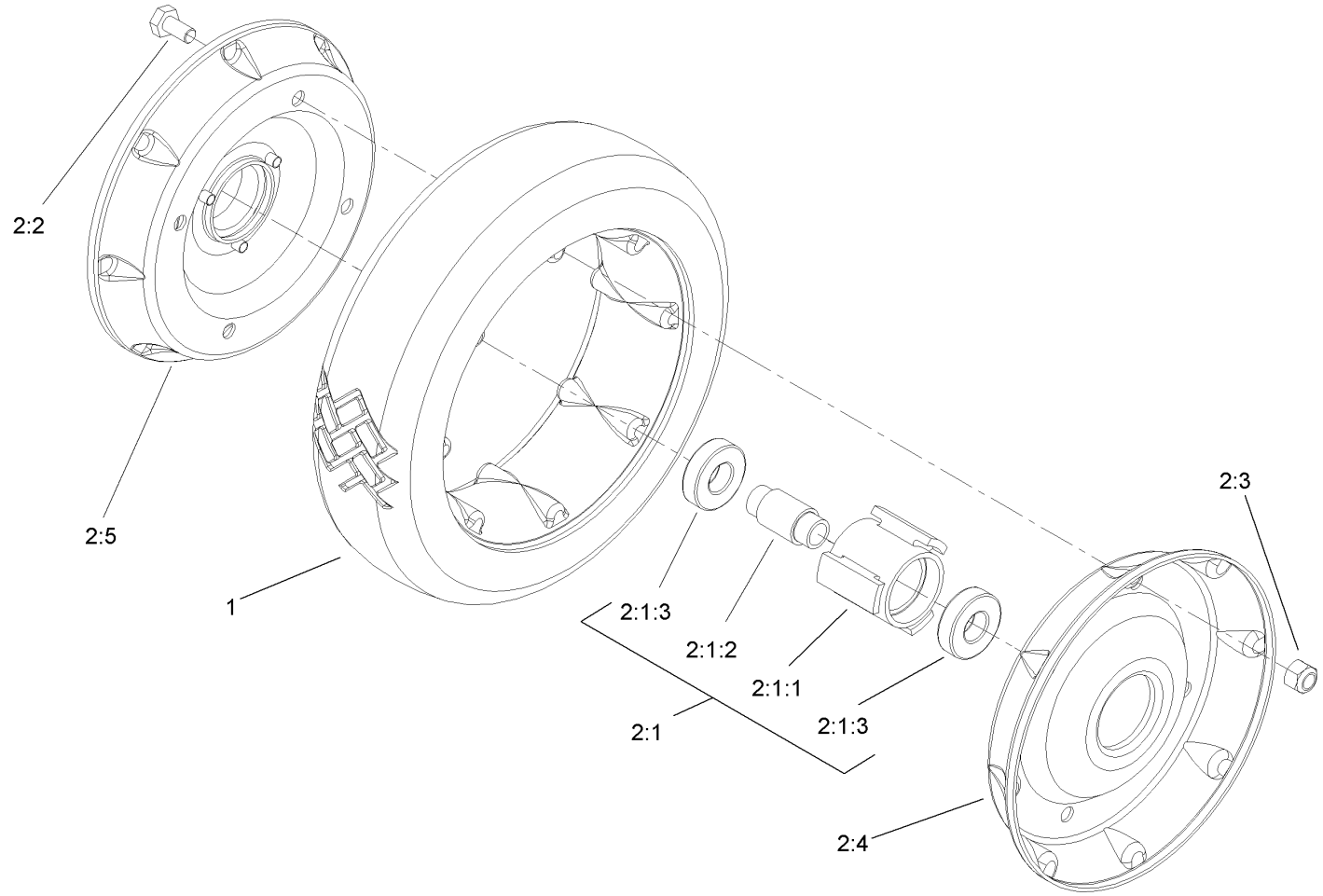


# Rear Wheel Assembly No. 100-2860

| Ref | Part No. | Qty. | Description |
|---|---|---|---|
| 1 | 53-7740 | 1 | Tire |
| ❷2 | | 1 | Wheel ASM |
| ❷2:1 | | 1 | Hub And Bearing ASM |
| 2:1:1 | 52-2410 | 1 | Hub-Bearing |
| 2:1:2 | 52-2440 | 1 | Spacer-Bearing |
| 2:1:3 | 52-2450 | 2 | Bearing-Wheel |
| 2:2 | 321-2 | 4 | Screw-HH |
| 2:3 | 3296-42 | 4 | Nut-Lock, NI |
| 2:4 | 53-7780-06 | 1 | Plate-Wheel, Half |
| 2:5 | 92-4957-06 | 1 | Wheel Half And Gear ASM |

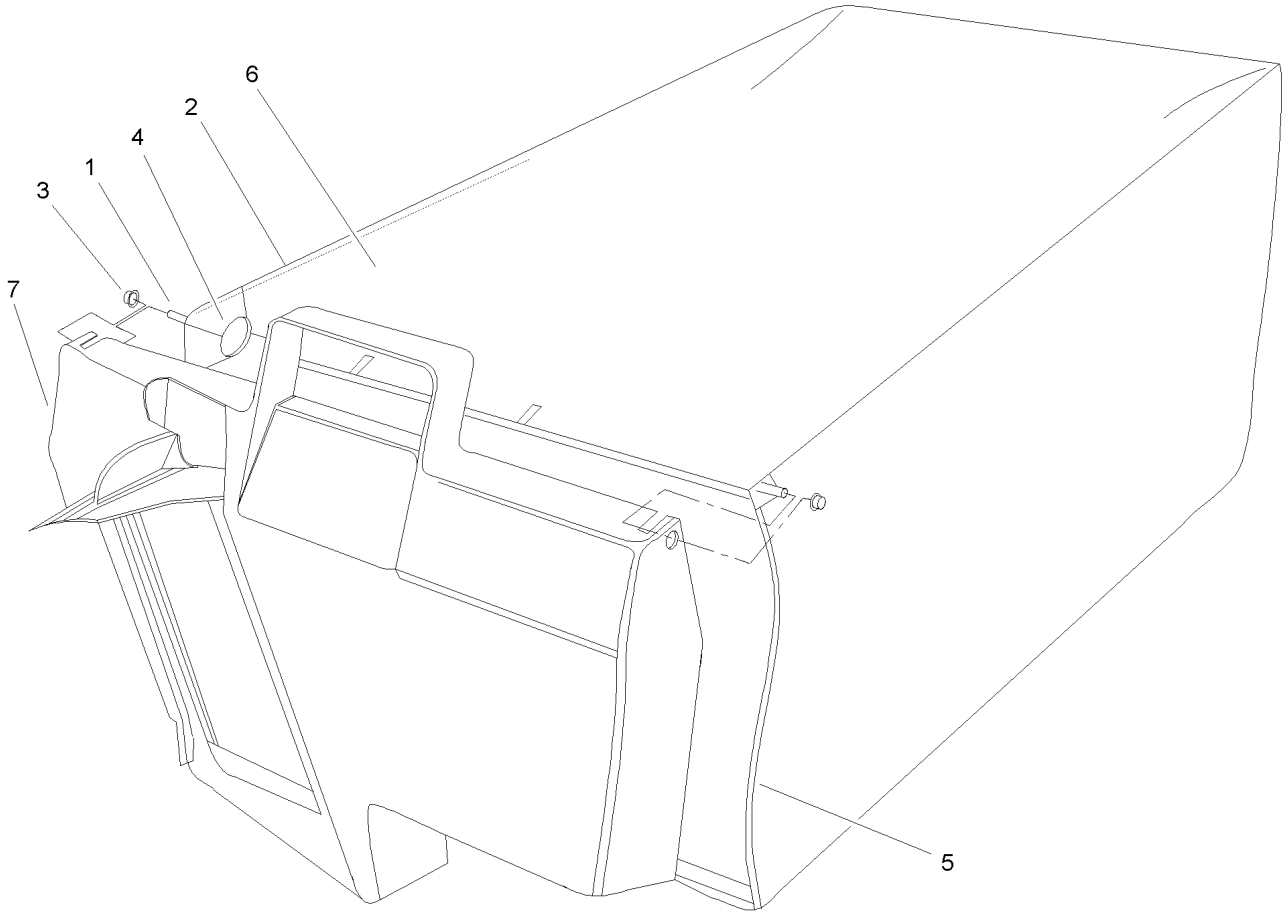


# Grass Bag Assembly No. 106-0975

| Ref | Part No. | Qty. | Description |
|---|---|---|---|
| 1 | 33-4820 | 1 | Hinge-Door, Bag |
| 2 | 42-4030 | 1 | Frame-Bag, Upper |
| 3 | 3290-422 | 2 | Nut-Push |
| 4 | 36-6910 | 2 | Spring |
| 5 | 42-4020 | 1 | Frame-Bag |
| 6 | 106-0926 | 1 | Bag-Grass |
| 7 | 48-2840 | 1 | Door-Bag, Grass |

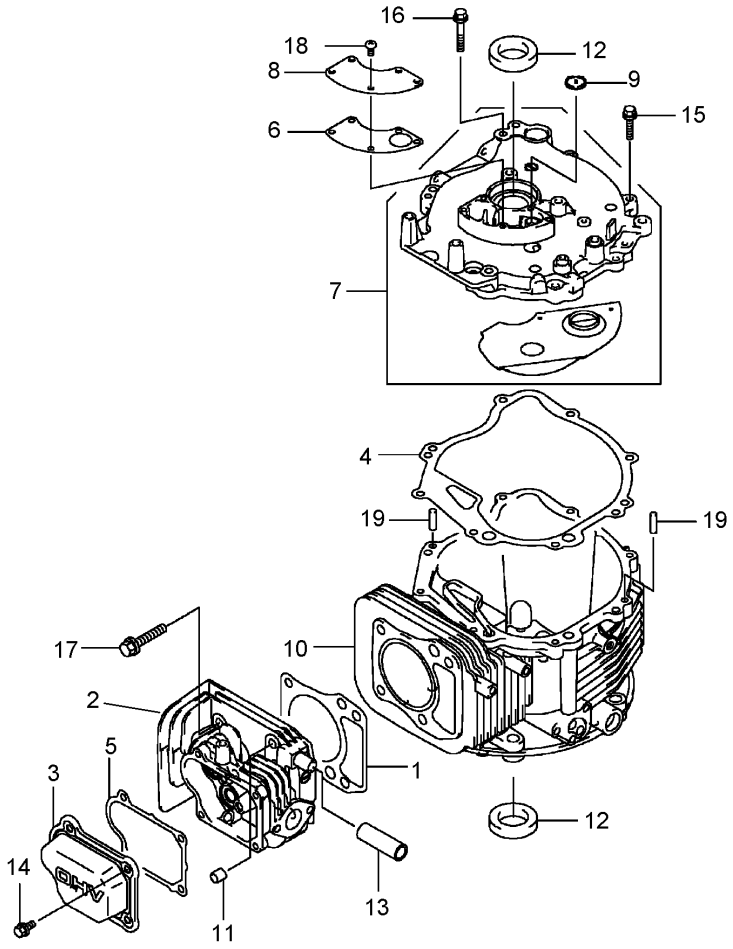


# Cylinder and Crankcase Assembly

| Ref | Part No. | Qty. | Description |
|---|---|---|---|
| 1 | 108-2627 | 1 | Gasket-Head |
| 2 | 108-2501 | 1 | Head-Cylinder |
| 3 | 108-2502 | 1 | Case-Rocker |
| 4 | 108-2503 | 1 | Gasket |
| 5 | 108-2504 | 1 | Gasket-Case, Rocker |
| 6 | 108-2505 | 1 | Gasket-Breather |
| 7 | 108-2506 | 1 | Cover-Complete |
| 8 | 108-2507 | 1 | Cover-Breather |
| 9 | 108-2508 | 1 | Valve-Breather |
| 10 | 108-2509 | 1 | Crankcase-Complete |
| 11 | 108-2510 | 2 | Pin |
| 12 | 108-2511 | 2 | Seal-Oil |
| 13 | 108-2512 | 1 | Tube |
| 14 | 100-2804 | 4 | Bolt-Flanged |
| 15 | 100-2610 | 7 | Bolt-Flanged |
| 16 | 108-2513 | 1 | Bolt-Flange |
| 17 | 108-2514 | 4 | Bolt-Flange |
| 18 | 100-2763 | 5 | Screw-Pan |
| 19 | 108-2515 | 2 | Pin-Dowel |

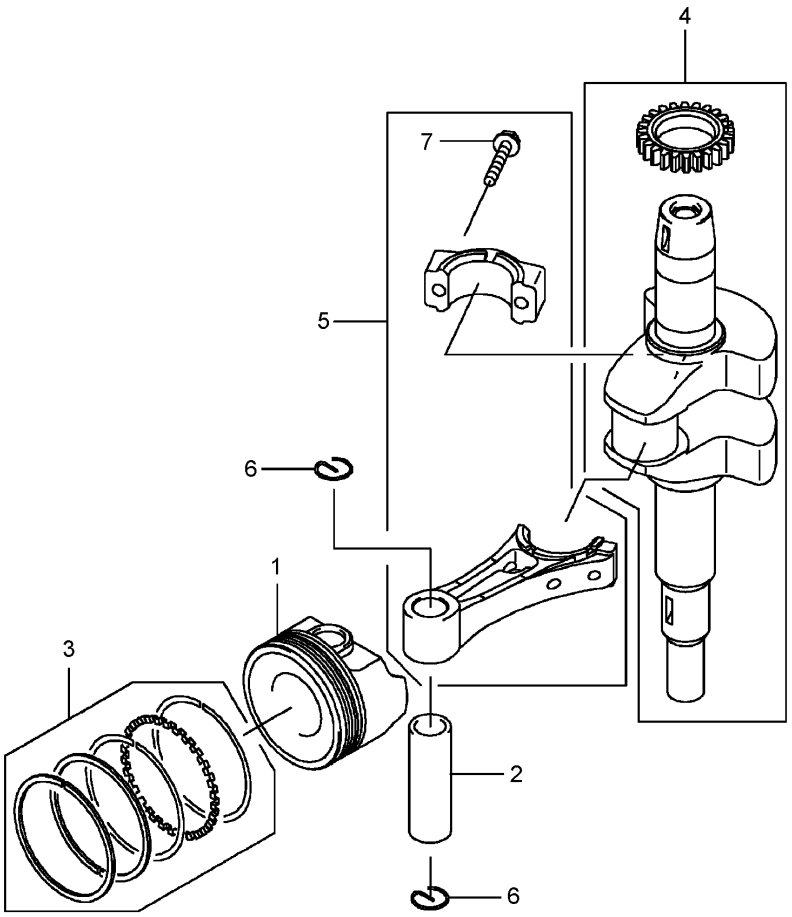


# Piston and Crankshaft Assembly

| Ref | Part No. | Qty. | Description |
|---|---|---|---|
| 1 | 108-2516 | 1 | Piston-Engine |
| 2 | 108-2517 | 1 | Pin-Piston |
| 3 | 108-2518 | 1 | Ring-Set, Piston |
| 4 | 108-2519 | 1 | Crankshaft |
| 5 | 108-2520 | 1 | Connecting Rod ASM |
| 6 | 108-2521 | 2 | Ring-Snap |
| 7 | 108-2522 | 2 | Bolt-Flange |

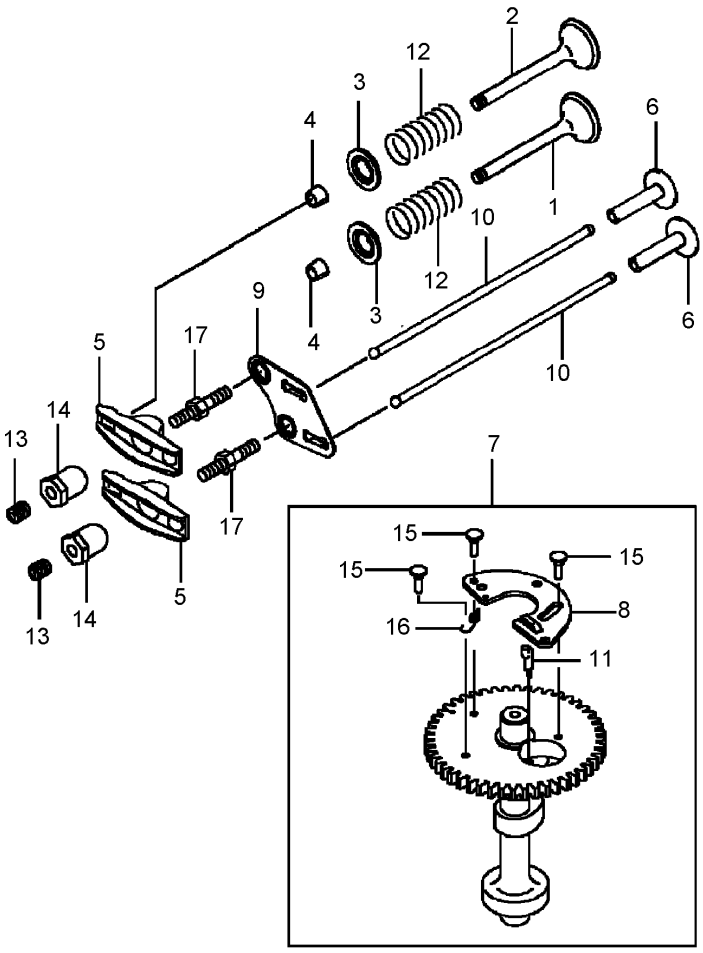


# Valve and Camshaft Assembly

| Ref | Part No. | Qty. | Description |
|---|---|---|---|
| 1 | 108-2523 | 1 | Valve-Intake |
| 2 | 108-2524 | 1 | Valve-Exhaust |
| 3 | 108-2525 | 2 | Retainer-Spring, Valve |
| 4 | 95-9744 | 4 | Collet |
| 5 | 108-2526 | 2 | Arm-Rocker |
| 6 | 108-2527 | 2 | Tappet |
| 7 | 108-2528 | 1 | Camshaft Valve ASM |
| 8 | 108-2529 | 1 | Weight |
| 9 | 108-2530 | 1 | Guide |
| 10 | 108-2531 | 2 | Rod-Push |
| 11 | 108-2532 | 1 | Arm |
| 12 | 108-2533 | 2 | Spring-Valve, Engine |
| 13 | 108-2534 | 2 | Screw |
| 14 | 93-8534 | 2 | Nut |
| 15 | 108-2535 | 3 | Pin |
| 16 | 108-2536 | 1 | Spring |
| 17 | 108-2537 | 2 | Bolt |

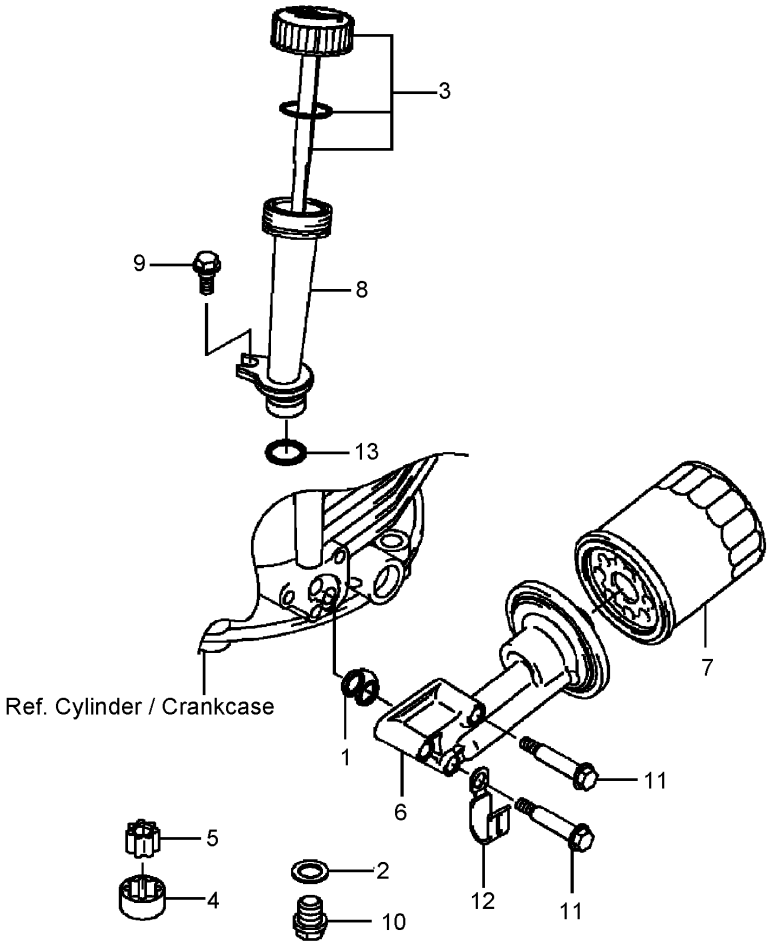


# Lubrication Equipment Assembly

| Ref | Part No. | Qty. | Description |
|---|---|---|---|
| 1 | 100-2644 | 1 | Gasket |
| 2 | 108-2538 | 1 | Gasket |
| 3 | 108-2539 | 1 | Cap ASM |
| 4 | 108-2540 | 1 | Rotor-Pump |
| 5 | 108-2541 | 1 | Rotor-Pump |
| 6 | 108-2542 | 1 | Pipe |
| 7 | KW10761 | 1 | Filter-Oil |
| 8 | 108-2543 | 1 | Filler |
| 9 | 108-2544 | 1 | Bolt |
| 10 | 108-2545 | 1 | Bolt |
| 11 | 108-2546 | 3 | Bolt |
| 12 | 108-2547 | 1 | Clamp |
| 13 | 100-2690 | 1 | O-Ring |

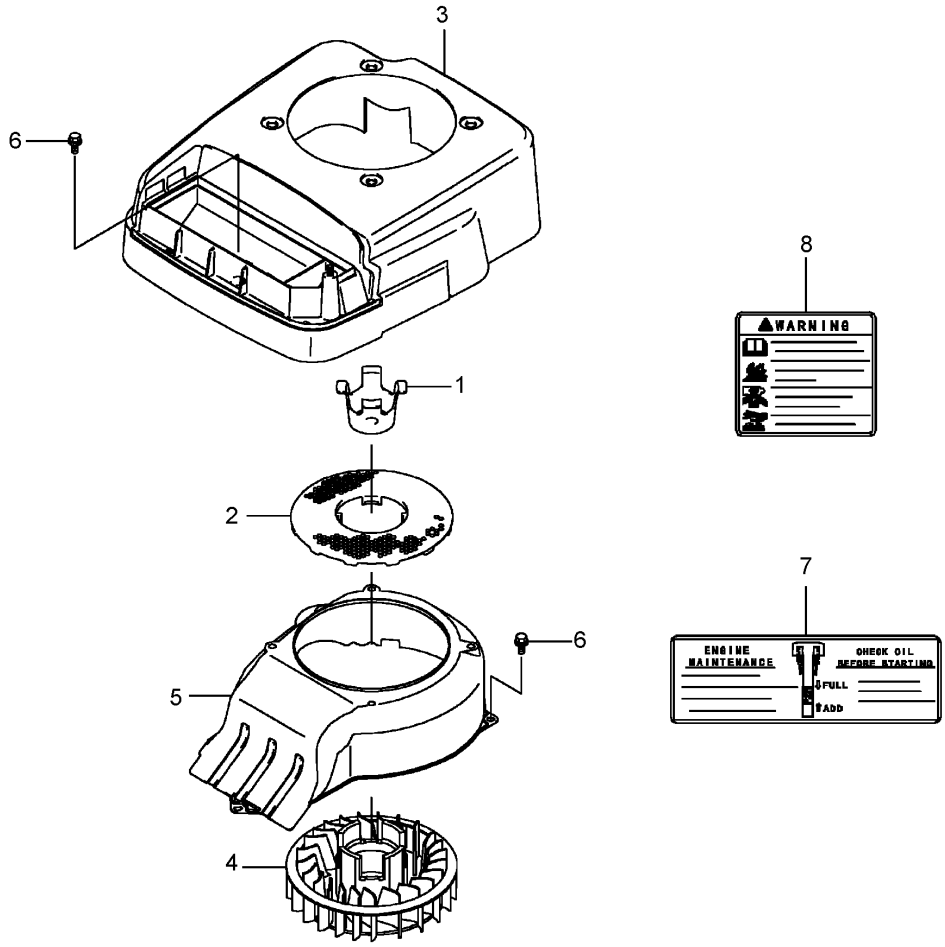


# Cooling Equipment Assembly

| Ref | Part No. | Qty. | Description |
|---|---|---|---|
| 1 | 108-2548 | 1 | Bracket-Fan |
| 2 | 108-2549 | 1 | Screen |
| 3 | 108-2550 | 1 | Cover |
| 4 | 108-2551 | 1 | Fan |
| 5 | 108-2552 | 1 | Housing-Fan |
| 6 | 100-2804 | 2 | Bolt-Flanged |
| 7 | 108-2624 | 1 | Label-Manual |
| 8 | 108-2625 | 1 | Label-Warning |

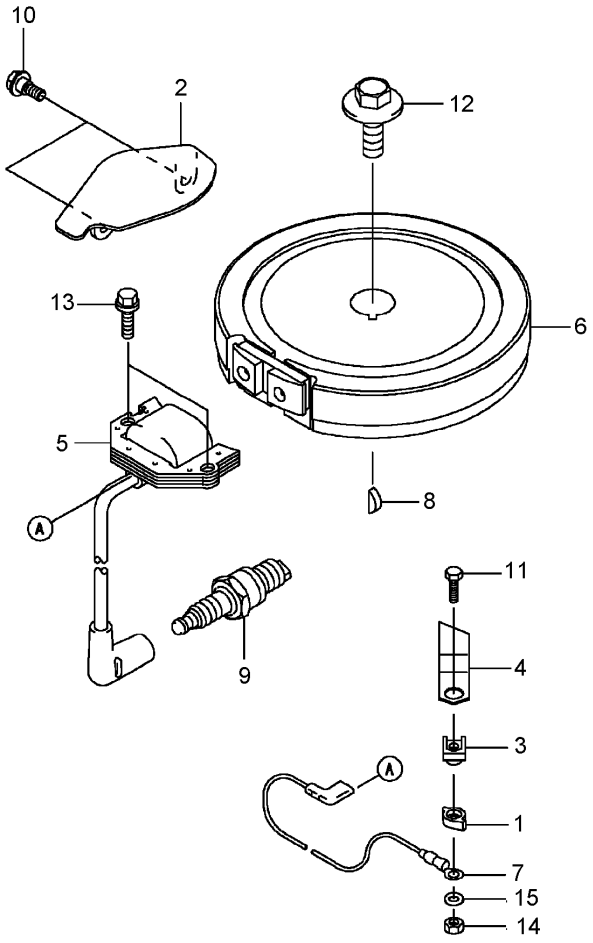


# Electrical Equipment Assembly

| Ref | Part No. | Qty. | Description |
|---|---|---|---|
| 1 | 100-2652 | 1 | Cover |
| 2 | 108-2553 | 1 | Cover |
| 3 | 100-2653 | 1 | Insulator |
| 4 | 100-2796 | 1 | Terminal |
| 5 | 108-2554 | 1 | Coil Ignition ASM |
| 6 | 108-2555 | 1 | Flywheel |
| 7 | 108-2556 | 1 | Wire-Lead |
| 8 | 93-8571 | 1 | Key |
| 9 | KW10676 | 1 | Spark Plug |
| 10 | 108-2544 | 2 | Bolt |
| 11 | 108-2558 | 1 | Bolt |
| 12 | 108-2559 | 1 | Bolt |
| 13 | 95-9893 | 2 | Bolt-Flanged |
| 14 | 100-2668 | 1 | Nut-Hex |
| 15 | 100-2798 | 1 | Washer-Plain |

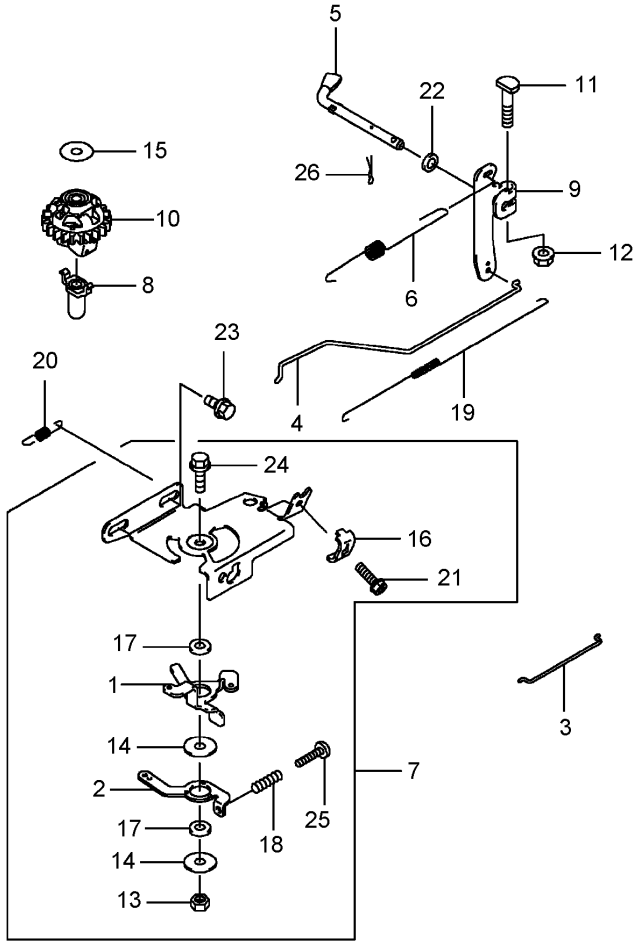


# Control Equipment Assembly

| Ref | Part No. | Qty. | Description |
|---|---|---|---|
| 1 | 108-2560 | 1 | Lever |
| 2 | 108-2561 | 1 | Lever |
| 3 | 108-2562 | 1 | Link-Choke |
| 4 | 108-2563 | 1 | Link-Throttle |
| 5 | 108-2564 | 1 | Arm-Pivot |
| 6 | 108-2565 | 1 | Spring-Govenor |
| 7 | 108-2566 | 1 | Control Panel ASM |
| 8 | 108-2567 | 1 | Sleeve |
| 9 | 108-2568 | 1 | Arm-Governor |
| 10 | 108-2569 | 1 | Governor ASM |
| 11 | 108-2570 | 1 | Bolt |
| 12 | 108-2571 | 1 | Nut |
| 13 | 108-2572 | 1 | Nut |
| 14 | 100-2715 | 2 | Washer |
| 15 | 93-8612 | 1 | Washer |
| 16 | 95-9849 | 1 | Clamp |
| 17 | 100-2718 | 2 | Collar |
| 18 | 93-8588 | 1 | Spring |
| 19 | 108-2573 | 1 | Spring-Throttle |
| 20 | 108-2574 | 1 | Spring |
| 21 | 95-9853 | 1 | Bolt |
| 22 | 108-2575 | 1 | Washer |
| 23 | 100-2804 | 2 | Bolt-Flanged |
| 24 | 108-2576 | 1 | Bolt-Flange |

| Ref | Part No. | Qty. | Description |
|---|---|---|---|
| 25 | 108-2577 | 1 | Screw-Pan |
| 26 | 108-2578 | 1 | Pin-Snap |

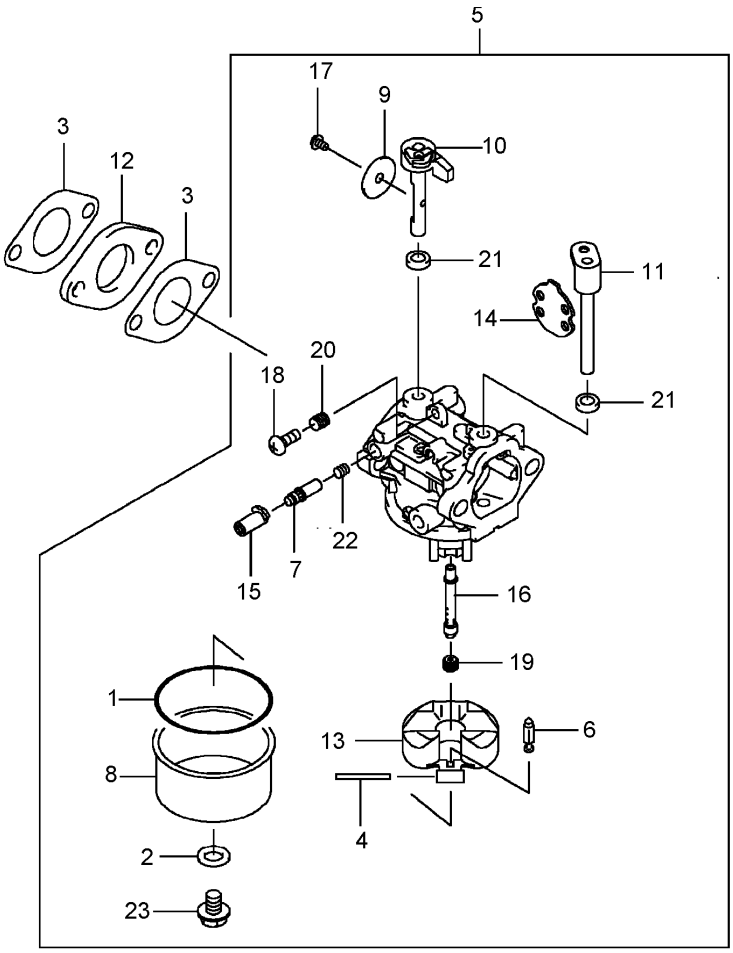


# Carburetor Assembly

| Ref | Part No. | Qty. | Description |
|---|---|---|---|
| 1 | 108-2579 | 1 | Gasket |
| 2 | 108-2580 | 1 | Gasket |
| 3 | 108-2581 | 2 | Gasket |
| 4 | 108-2582 | 1 | Shaft |
| 5 | 108-2583 | 1 | Carburetor ASM |
| 6 | 108-2584 | 1 | Needle-Jet |
| 7 | 108-2585 | 1 | Screw-Pilot, Air |
| 8 | 108-2586 | 1 | Chamber-Float |
| 9 | 108-2587 | 1 | Valve-Throttle |
| 10 | 108-2588 | 1 | Shaft-Carburetor |
| 11 | 108-2589 | 1 | Shaft-Carburetor |
| 12 | 108-2590 | 1 | Insulator |
| 13 | 108-2591 | 1 | Float ASM |
| 14 | 108-2592 | 1 | Choke Valve ASM |
| 15 | 108-2593 | 1 | Limiter |
| 16 | 108-2594 | 1 | Nozzle-Main |
| 17 | 108-2595 | 1 | Screw |
| 18 | 108-2596 | 1 | Screw |
| 19 | 108-2597 | 1 | Jet-Main (#74) |
| 20 | 108-2598 | 1 | Spring |
| 21 | 108-2599 | 2 | Seal |
| 22 | 108-2600 | 1 | Spring |
| 23 | 108-2601 | 1 | Screw |

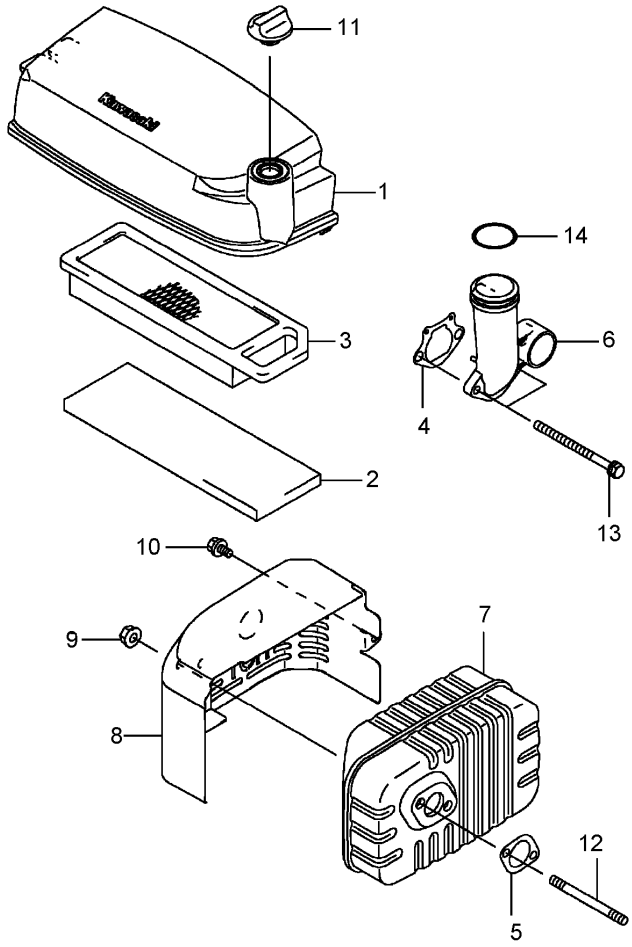


# Air Filter and Muffler Assembly

| Ref | Part No. | Qty. | Description |
|---|---|---|---|
| 1 | 108-2602 | 1 | Case-Filter, Air |
| 2 | 108-2603 | 1 | Element-Filter, Air |
| 3 | 108-2604 | 1 | Air Filter Element ASM |
| 4 | 108-2605 | 1 | Gasket-Pipe, Intake |
| 5 | 108-2606 | 1 | Gasket-Muffler |
| 6 | 108-2607 | 1 | Pipe-Intake |
| 7 | 108-2608 | 1 | Muffler |
| 8 | 108-2609 | 1 | Cover-Muffler |
| 9 | 108-2610 | 2 | Nut |
| 10 | 108-2611 | 1 | Bolt |
| 11 | 108-2612 | 1 | Nut |
| 12 | 100-2761 | 2 | Bolt-Stud |
| 13 | 100-2762 | 2 | Bolt |
| 14 | 108-2613 | 1 | O-Ring |

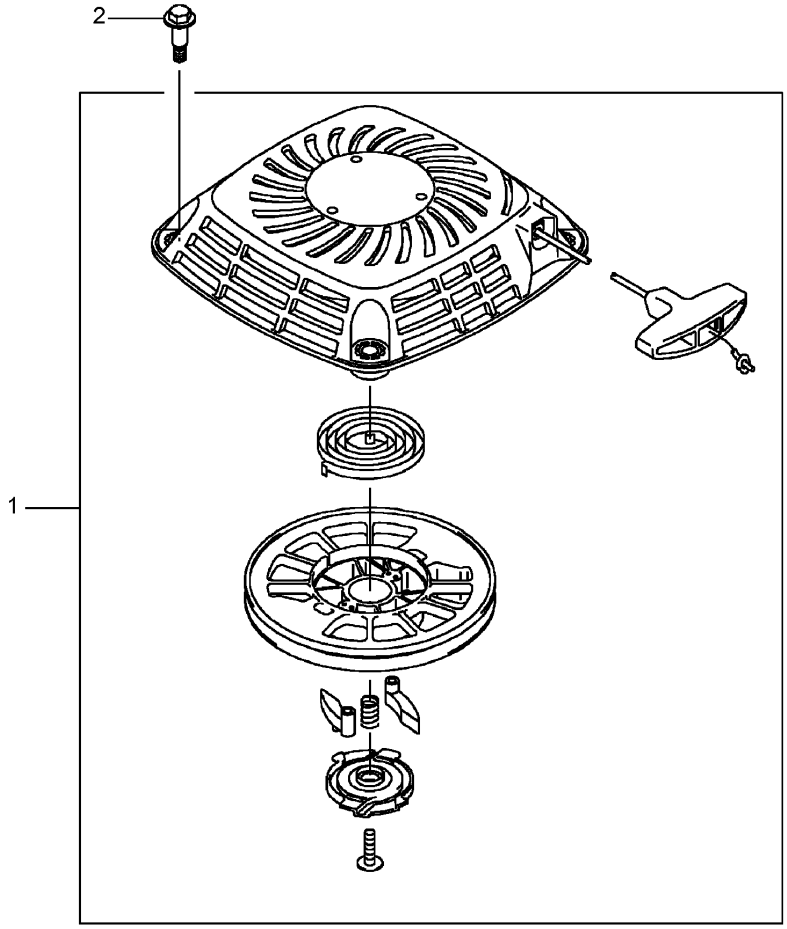


# Starter Assembly

| Ref | Part No. | Qty. | Description |
|---|---|---|---|
| 1 | 108-2614 | 1 | Starter-Recoil |
| 2 | 108-2615 | 4 | Bolt |

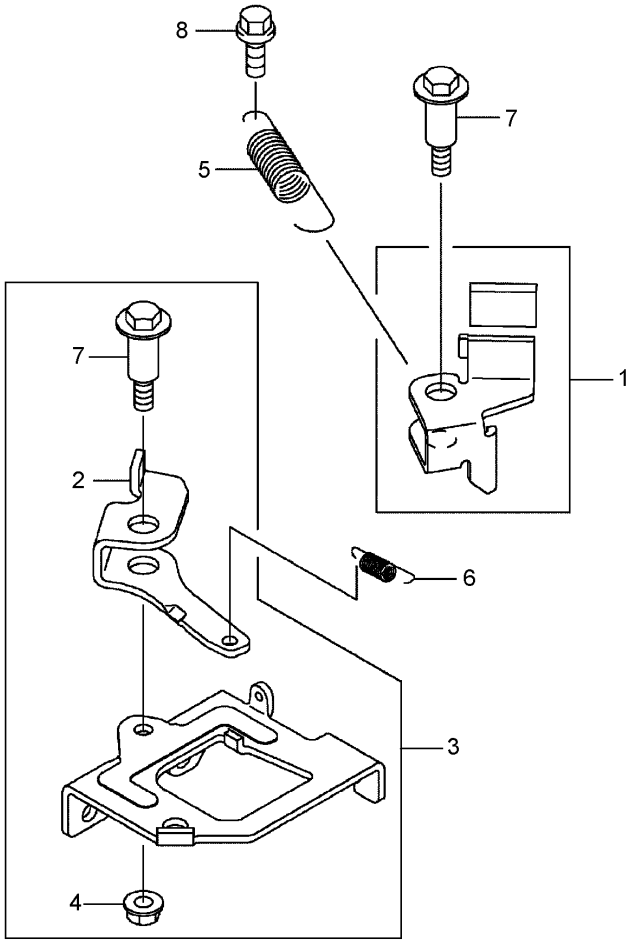


# Brake and Lever Assembly

| Ref | Part No. | Qty. | Description |
|---|---|---|---|
| 1 | 108-2616 | 1 | Lever |
| 2 | 108-2617 | 1 | Arm |
| 3 | 108-2618 | 1 | Brake Panel ASM |
| 4 | 108-2619 | 1 | Nut |
| 5 | 108-2620 | 1 | Spring |
| 6 | 108-2621 | 1 | Spring |
| 7 | 108-2622 | 2 | Bolt |
| 8 | 108-2623 | 1 | Bolt-Flange |

# NOTES


TORO®