Form No. 3354–335 Rev A

Grooming Reel Kit

Greensmaster® 1000 & 1600

Model No. 04124
Model No. 04126

Operator's Manual

Loose Parts Chart

Description	Qty.	Use
Height Of Cut Arm	2	Use to Mount Front Roller To Frame (Model 04124 only)
Frame Assembly R.H.	1	Attaches to right frame
Frame Assembly L.H.	1	Attaches to left frame
Bearing Adapter	2	Connects groomer to reel frame
Spacers	4	Connects groomer to reel frame
Slot Cover	2	Mount between groomer housing and left reel bearing housing
Flat Head Screws	2	Fastens bearing adapters
Locknut	4	Fastens bearing adapters
Grooming Reel Assembly	1	41 blades, 1/2" spacing (Model 04126) 52 blades, 1/2" spacing (Model 04124)
Driven Pulley	1	Mounts to grooming reel
Locknut	1	Mounts to grooming reel
Drive Pulley	1	Drives belt
Belt	1	Drives grooming reel
Ring Adapter	2	Connects groomer to reel frame
Operators Manual	1	Read before operating machine
Parts Catalog	1	
Registration Card	1	Fill out and send to the Toro Co

Set–up Instructions

Important Read this Operator's Manual thoroughly before setting up or operating the groomer. Failure to follow the set up or operating instructions in this manual may result in damage to the machine, groomer and the turf.

Note: The terms "left" and "right" used in the text refer to the left and right sides of the machine as viewed from the operator's position.

1. Loosen the jam nuts and set screws securing each end of the front roller to the height–of–cut arms (Fig. 1).
2. Remove the carriage bolts and locknuts securing the height–of–cut arms to the adjusting brackets (Fig. 1). Remove the height–of–cut arms and roller assembly.
3. On the Greensmaster 1600 only, remove the height–of–cut adjusting screws, jam nuts and set screws from the height–of–cut arms (Fig. 1).

   On the Greensmaster 1000 only, remove the two taper face bolts securing the right and left height–of–cut brackets to the side plates (Fig. 1). Install the height–of–cut brackets to the opposite sides of the machine with the bolts removed. Use the rear sets of mounting holes in the side plates.

© 2005 by The Toro Company
8111 Lyndale Avenue South
Bloomington, MN 55420-1196

All Rights Reserved
Printed in the USA

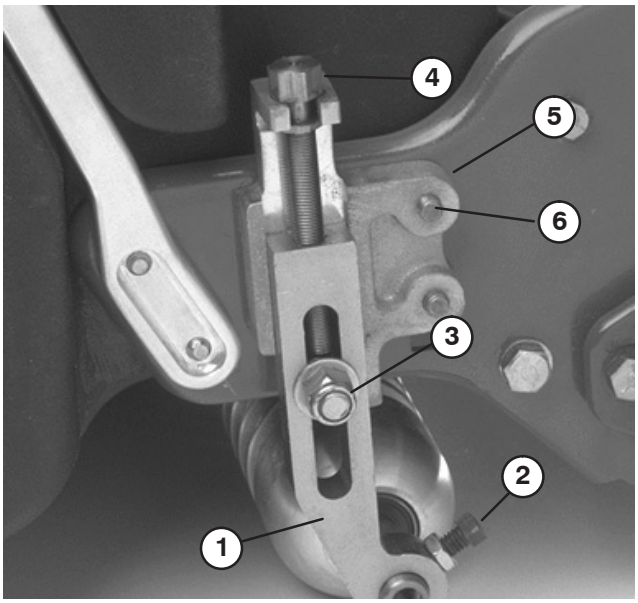

Figure 1

1. Height of cut arm
2. Jam nut & set screw
3. Carriage bolt, washer & locknut
4. Height of cut adjusting screw
5. Height of cut bracket
6. Taper face bolt

4. On Greensmaster 1600 only, install the new height–of–cut arms and roller assembly with the height–of–cut adjusting screws, jam nuts and set screws previously removed (Fig. 2).

On Greensmaster 1000, install the height–of–cut arms previously removed. The height–of–cut arms on both models are to be rotated to the forward position as shown in figure 2.

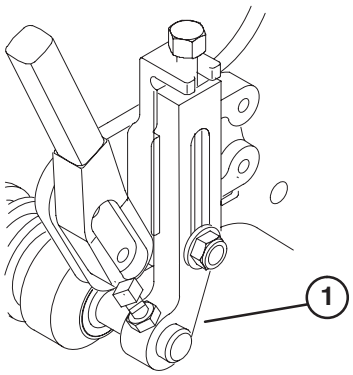

Figure 2

1. Height of cut arm in forward position

5. Remove the two capscrews and locknuts securing the end cap to the left reel bearing housing and the side plate of the machine. Remove and retain the end cap and the mounting screws for use if the groomer is ever removed (Fig. 3).

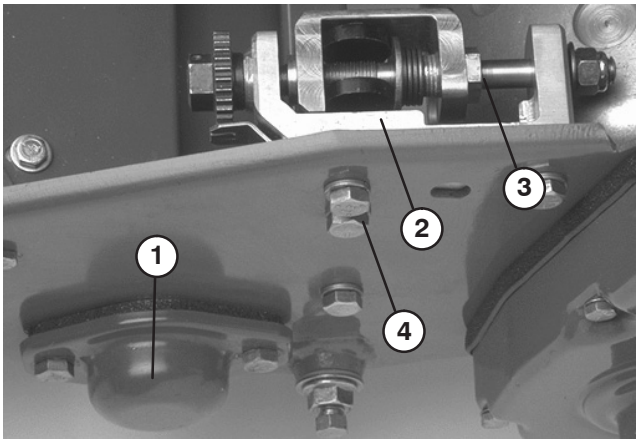

Figure 3

1. End cap
2. Bedbar adjuster frame
3. Spring tension screw
4. Capscrews and washers

Note: Steps 6 and 7 pertain only when installing the groomer kit on a Greensmaster 1000 with a serial number prior to 229999999 or on any Greensmaster 1600.

6. Using a 7/8" standard wrench, loosen the spring tension screws on the right and left bedbar adjusters (Fig. 3). Back out the screws until the thrust washers are no longer tensioned against the bedbar.

7. Remove the two capscrews and washers securing left bedbar adjuster frame to side plate (Fig. 3).

8. Install the left grooming reel housing assembly onto the left reel frame using the following procedure:

A. Remove 3 socket head capscrews and lock washers securing cover to groomer housing assembly (Fig. 4).

B. Remove the Belleville washer and the 3/8 x 5/8 in. capscrew from each mounting block (Fig. 4).

C. Insert an adapter ring into the reel bearing housing (Fig. 4 & 5).

D. Insert two 3/8 x 2 in. flat head screws through the bearing adapter and position the spacers on the ends of the screws (Fig. 4 & 5).

E. Align the bearing adapter, spacers and screws with the bronze bearing and the slots in the groomer housing. Slide the bearing adapter through the bronze bearing and the screws through the slots in the groomer housing assembly (Fig. 4 & 5).

F. Insert a slot cover onto each screw, aligning the curved side of the slot cover with the curve of the groomer housing. The slot covers are to be positioned curving away from groomer housing (Fig. 4).

G. Insert the flat head screws into the reel bearing housing. Install the locknuts on the screws and torque them to 23 to 27 ft.–lb (Fig. 4 & 5).

Note: To gain access to the locknuts it may be necessary to move or remove the bedbar.

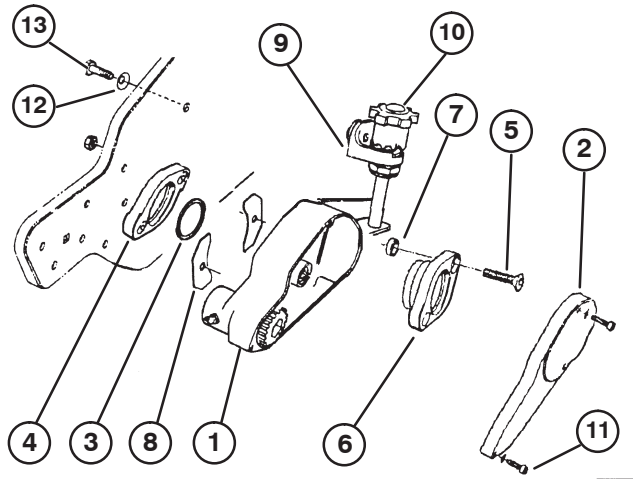

Figure 4

1. Left groomer reel housing assembly
2. Housing cover
3. Adapter ring
4. Reel bearing housing
5. Flat head screw
6. Bearing adapter
7. Spacer
8. Slot covers
9. Mounting block
10. Adjustment knob assembly
11. Socket head screws
12. Belleville washer
13. Capscrew

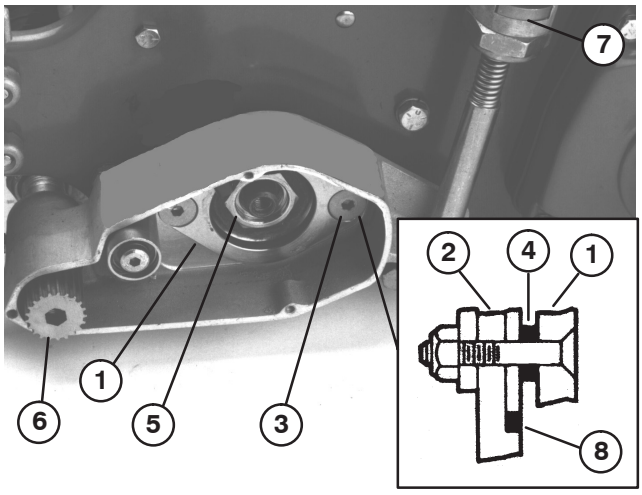

Figure 5

1. Bearing adapter
2. Reel bearing housing
3. Flat head screw
4. Spacer
5. Bearing locknut
6. Driven pulley
7. Groomer adjustment knob
8. Adapter ring

9. Slide one end of the grooming shaft assembly into the the bearing support in the groomer housing assembly (Fig. 5).

10. Apply blue Loctite to the threads on the groomer shaft. Thread the driven pulley (left hand thread) onto the end of the groomer shaft. Using a 3/8” allen socket on a torque wrench, torque the pulley to 29 to 35 ft.–lb (Fig. 4 & 5).

11. Mount the adjustment knob mounting block to the left side plate with the 3/8 x 5/8” lg. capscrew and Belleville washer previously removed (Fig. 4).

Note: Step 12 pertains only when installing the groomer kit on a Greensmaster 1000 with a serial number prior to 229999999 or on any Greensmaster 1600.

12. Reinstall the left bedbar adjuster frame to the side plate with the capscrews and washers previously removed (Fig. 4).

13. Remove the reel bearing locknut from the reel shaft (Fig. 5). Secure the reel from turning with a wood block.

14. Thread the drive pulley onto the left reel shaft extension (Fig. 6). Secure the reel from turning with a wood block and torque the pulley to a minimum of 17 ft–lb.

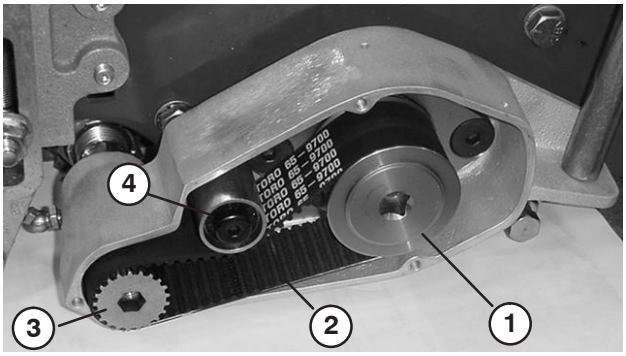

Figure 6

1. Drive pulley
2. Toothed drive belt
3. Driven pulley
4. Idler pulley

15. Install the toothed drive belt around the drive pulley and driven pulley and under the backside idler (Fig. 6).

16. Remove the (4) capscrews securing the reel drive cover to the right side plate and remove the cover (Fig. 7).

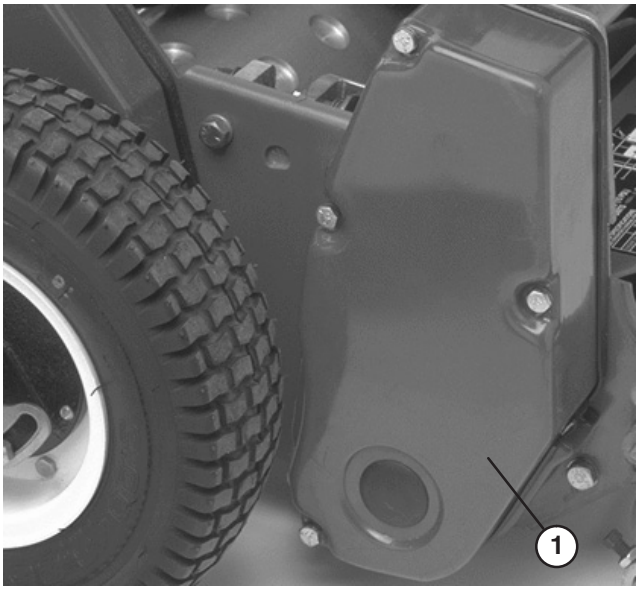

Figure 7

1. Reel drive cover

17. Loosen the idler pulley to relieve the belt tension and remove the reel drive belt from the pulleys (Fig. 8).

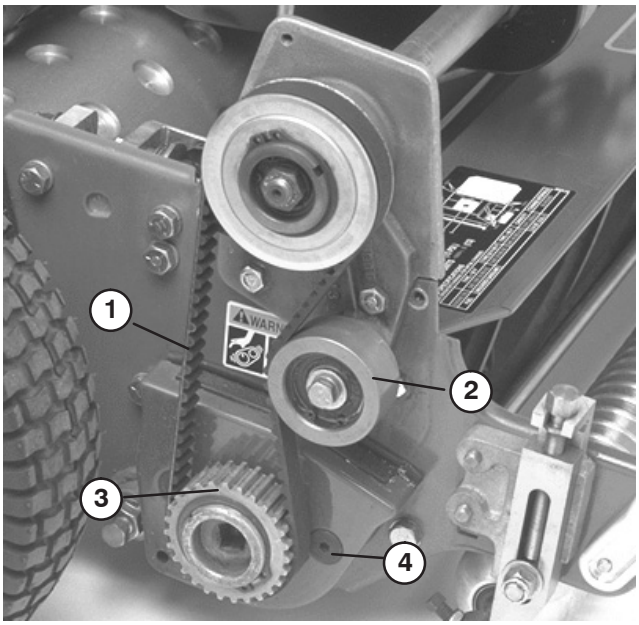

Figure 8

1. Reel drive belt
2. Idler pulley
3. Drive pulley
4. Flat head machine screw

18. Using a 1/2" drive ratchet and extension, remove the drive pulley from the reel shaft (Fig. 8). Secure the reel from turning with a wood block.

19. Remove the two flat head machine screws and nuts securing the groomer arm cover to the bearing housing and side plate (Fig. 8). Remove the groomer arm cover and retain the fasteners.

Note: Step 20 pertains only when installing the groomer kit on a Greensmaster 1000 with a serial number prior to 229999999 or on any Greensmaster 1600.

20. Remove the two capscrews and washers securing the right bedbar adjuster frame to the side plate.

21. Install the right hand groomer plate assembly onto the right reel bearing housing using the following procedure:

A. Insert an adapter ring into the reel bearing housing (Fig. 9).

B. Slide the groomer plate assembly over the end of the groomer shaft (Fig. 9).

C. Insert the two 3/8 x 2" lg. flat head screws through the groomer arm cover and the bearing adapter. Put a spacer over each screw before positioning the adapter into the reel bearing housing. Slide the adapter through the bronze bearing in the groomer plate assembly and into the reel bearing housing. Install the locknuts on the flat head screws and torque them to 23 to 27 ft–lb (Fig. 9).

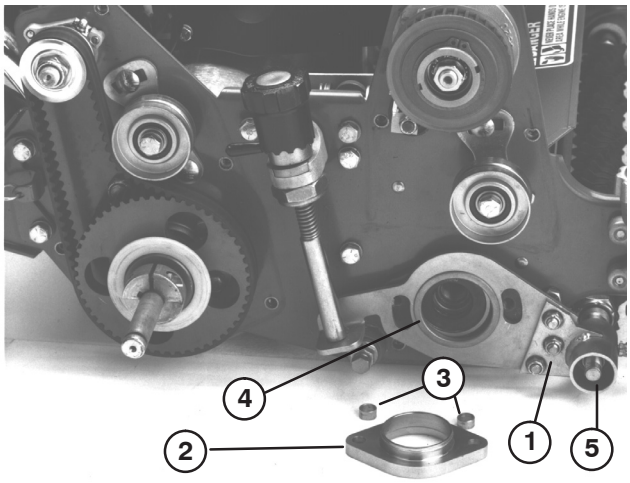

Figure 9

1. Groomer plate adapter
2. Bearing adapter
3. Spacer
4. Adapter ring
5. Groomer shaft

D. Secure the right end of the groomer shaft to the groomer plate assembly with a 1/2 in. locknut (Left hand thread) Torque the locknut to 29 to 35 ft–lb (Fig. 9).

22. Mount the groomer adjustment knob assembly to the right side plate with the 3/8 x 5/8" lg. capscrew and Belleville washer previously removed (Fig. 9).

Note: Step 23 pertains only when installing the groomer kit on a Greensmaster 1000 with a serial number prior to 229999999 or on any Greensmaster 1600.

23. Reinstall the right bedbar adjuster frame to the side plate with the capscrews and washers previously removed.

24. Check the tension on the drive belt by depressing it at the midpoint between the drive pulley and the driven pulley (Fig. 9). A force of 5 to 10 lbs. should be required to depress the midpoint of the belt 1/4 inch. To adjust tension, loosen the backside idler pulley pivot allen head bolt, pivot the idler to achieve the proper tension, and torque the allen head bolt to 7 to 10 ft–lbs.

25. Install the cover to the housing, with the 3 new socket head screws and lockwashers provided in the kit (Fig. 10).

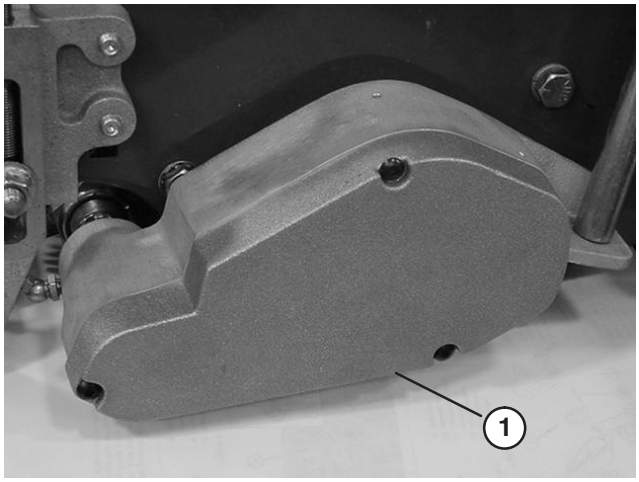

Figure 10

1. Housing cover

26. Using a 1/2" drive ratchet and extension, reinstall drive pulley and belt to reel shaft (Fig. 13). Secure the reel from turning with a wood block. Tighten pulley to 40 to 60 ft–lbs of torque.

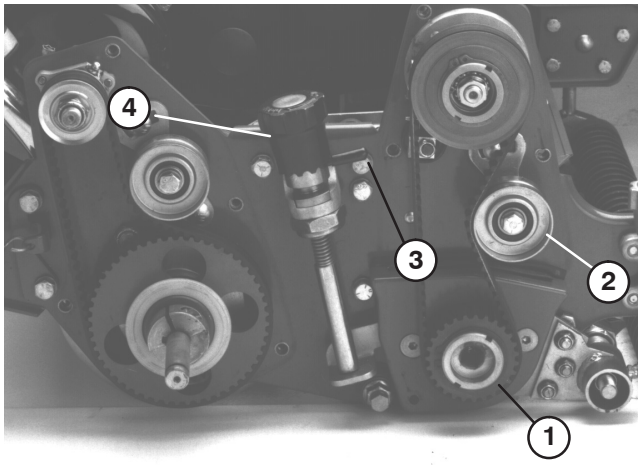

Figure 11

1. Drive pulley
2. Idler pulley
3. Quick up lever
4. Micro adjustment knob

27. Reinstall reel drive belt. Check tension by depressing belt at mid span of pulleys with 4 ± 1 lbs. of force. Belt should deflect 1/4 in.

28. Reinstall reel drive cover to sideplate with (4) capscrews previously removed.

29. Check the assembly of the groomer. Rotate both quick up levers to raise the grooming reel into the transport position (Fig. 11). Correct any problems and recheck the assembly.

30. Using a hand pump grease gun, lubricate the two grooming reel shaft bearings (one on each end). Pump only 2–3 pumps maximum to avoid permanently damaging the grease seals.

31. Center the roller between the height of cut arms and tighten the set screws and jam nuts.

Operating Instructions

Introduction

Grooming is performed above the soil level. Grooming promotes vertical growth of the grass by cutting runners (stolons), removing thatch and encouraging denser growth and deeper rooting. This can, in effect, yield a more even grass with less “grain” for faster and truer action of the golf ball.

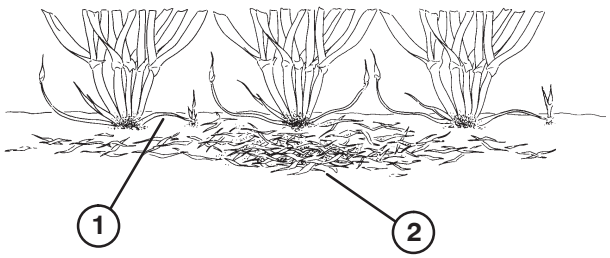

Figure 12

1. Grass runners
2. Thatch

Grooming is similar to verti–cutting in its runner cutting action. Grooming blades however, should never penetrate the soil like verti–cutting or dethatching. Groomer blades are spaced closer together and are used more often than verti–cutters so that they are more effective in cutting runners and removing thatch. Verti–cutters are used primarily for greens renovation while groomers are used for ongoing greens upkeep.

It is difficult to make precise recommendations on use of grooming reels because so many variables affect the performance of grooming including:

A. The time of the year (i.e., the growing season) and weather pattern.

B. The general condition of each green.

C. The frequency of grooming/cutting–both how many cutting per week and how many passes per cutting.

D. The height of cut setting on the main reel.

E. The height/depth setting on the grooming reel.

F. How long the grooming reel has been in use on this green.

G. Type of grass on the green.

H. The overall greens management program (i.e. irrigation, fertilizing, spraying, coring, over seeding, etc.).

I. Traffic

J. Stress periods (i.e., high temperatures, high humidity, unusually high traffic).

These factors can vary from golf course to golf course and from green to green. It is important, therefore, to inspect the greens frequently and vary the grooming practice in accordance with the need.

The groomer is set at the factory with 1/2” blade spacing. By removing spacers and adding blades or adding spacers and removing blades the groomer can be changed to 1/4” or 3/4” spacing.

Grooming with 1/4” blade spacing is recommended for fast growth periods (spring through early summer). Grooming with 3/4” blade spacing is recommended for slower growth periods (late summer through fall and winter). During high stress periods it may be desirable to not use the grooming reel.

Note: Grooming with 1/4” blade spacing will tend to remove more grass blades and thatch and cut more runners than grooming with 1/2” or 3/4” blade spacing. If grooming with 1/4” blade spacing, one or two groomings per week will probably be sufficient except during maximum growth periods.

Note: The practice of changing the direction of cut each time the green is cut should be continued when a groomer is used. This rotation will enhance the effects of the grooming.

Test Groomer Performance

Important Improper or over aggressive use of the grooming reel (i.e., too deep or too frequent grooming) may cause unnecessary stress on the turf leading to severe greens damage. Use the groomer cautiously.

It is important to determine the performance of the groomer before putting it into regular use on greens. Toro strongly suggests that a formal test procedure be used. The following is a practical way of determining the proper height/depth setting:

1. Set the cutting reel to the height of cut that would normally be used without the grooming reel. Use a Wiehle roller and scraper for the front roller

2. Set groomer reel 1/32” above the roller level; refer to Height/Depth of Groomer Setting.

3. Make a pass over the test green, then lower groomer flush with roller level and make another pass over test green.

4. Compare the results. The first groomed area when the setting was 1/32” above roller level will have removed significantly less grass and thatch than the second setting.

Check the test green 2 or 3 days after the first grooming for general condition/damage. If the groomed areas are turning yellow/brown, and the non–groomed areas are green, then the grooming was too aggressive.

Note: The color of the grass will change when the grooming reel is used. This can be observed with the first grooming and will continue over time. Experience will allow the greens superintendent to judge by color of the turf (along with close examination) if the current grooming practice is appropriate for the particular green. Because the grooming reel stands up more grass and removes thatch, the quality of the cut will not be the same as without the groomer. This effect is most noticeable the first few times a groomer is used on a green.

Note: On multiple passes (i.e., double and triple cutting), the groomer will continue to penetrate deeper on each successive pass. Multiple passes are not recommended.

5. After testing the performance of the groomer on a test green and satisfactory results are obtained, grooming on the playing greens can begin. It is important to realize, however, that each green may respond differently to grooming. In addition, growing conditions are constantly changing. Inspect the groomed greens frequently and make adjustments to the grooming procedure as often as necessary.

Height/Depth Of Groomer Setting

The groomer blade height/depth of grooming can be set using the following procedure:

1. Make sure the rollers are clean and main reel is set to desired height of cut. Position machine on a flat, level work surface.
2. Use the quick up levers (both sides) to lower the grooming reel into the grooming position (Fig. 13).

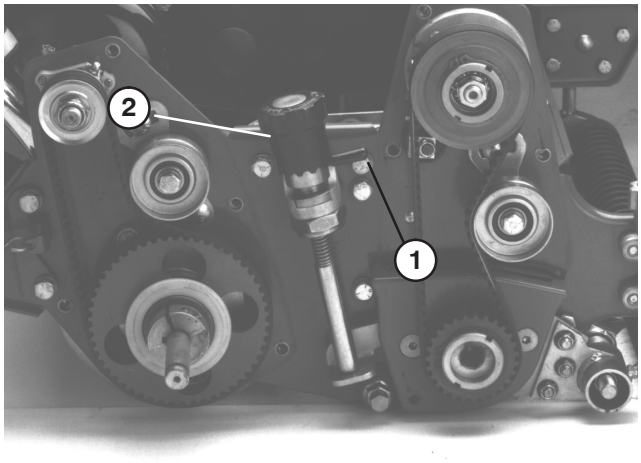

Figure 13

1. Quick up lever
2. Micro adjustment knob

3. On one end of the groomer shaft, measure the distance from the lowest tip of a groomer blade to the work surface (Fig. 14). Lift and turn the micro adjustment knob (Fig. 13) to raise or lower blade tip. Each notch on the micro adjustment knob is approximately equal to .007 inch of groomer depth.



Figure 14

4. Repeat procedure on opposite end of groomer, then recheck setting on first side.
5. Put the grooming reel into the transport position.

Transport Mode

Important When transporting machine be sure to raise the grooming reel into its transport (raised) position. To raise the grooming reel, rotate the right and left quick up levers so they face to the rear (Fig. 13). To lower the grooming reel, turn the quick up levers forward.

Maintenance

Cleaning

Hose off the grooming reel after use. Do not direct the water stream directly at the groomer bearing seals. Do not permit the grooming reel to stand in water so that the components rust.

Lubrication

Lubricate the (2) grooming reel shaft bearings with a hand pump grease gun (2 or 3 pumps maximum). Do not over grease as excess may cause seal failure

Note: When lubricating the main reel bearings, do not over grease because excess grease can work its way into the grooming reel clutch and drive belt mechanism.

Blade Inspection

Inspect the grooming reel blades frequently for damage and wear. Bent blades may be straightened with a pliers. Worn blades can be replaced or the grooming reel shaft reversed to put the sharpest edge of the blade forward. When inspecting the blades, check to see that the right and left blade shaft end nuts are tight.

Note: Because the groomer may introduce more debris (i.e., dirt and sand) into the cutting unit than what the reel would normally be exposed to, the bedknife and main reel should be checked for wear more frequently. This is especially important in sandy soil and/or when the groomer is set for penetration.

Grooming Reel Replacement

The grooming reel can be removed to replace individual blades, the entire shaft or to reverse the shaft so that the sharpest edge of the blades are forward. Remove and replace the grooming reel shaft using the following procedure:

1. Remove the left side grooming reel housing cover. Remove the drive belt by loosening the idler pulley.
2. Remove the grooming reel drive shaft pulley (left hand thread) using an allen wrench. Then remove the locknut securing the grooming reel to the right bearing housing bracket.
3. Remove the right side grooming reel housing bearing bracket by unfastening the three bolts and nuts. Remove the grooming reel shaft.
4. Assemble the shaft in reverse order. Using the location marks on each blade as a guide, assemble each blade so the location mark is offset one flat on the hexagonal shaft (Fig. 15).

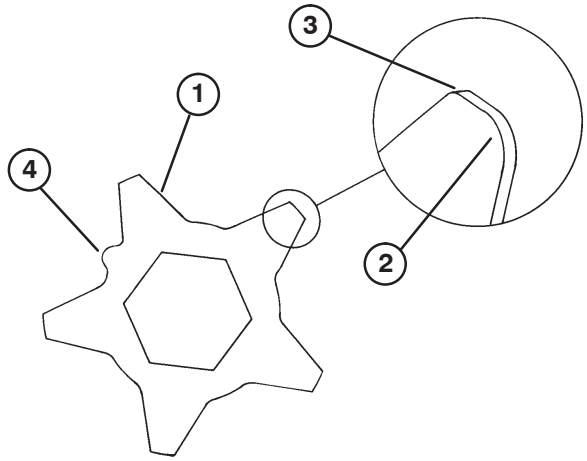

Figure 15

1. Grooming blade
2. Dull (rounded) edge
3. Sharp edge
4. Location mark

Note: The location marks on each blade are offset so they can be used to achieve proper grooming reel setup. Stack the blades and match the location marks before installing them on the grooming reel shaft.

Torque the drive pulley and locknut (left hand thread) to 29 to 35 ft–lbs. Check drive belt tension. There should be 1/4 inch deflection when a force of 5–10 lb is applied midway between the drive and driven pulleys. To adjust belt tension, loosen the backside idler pivot screw and pivot the idler to achieve proper tension. Torque the pivot screw to 7–10 ft–lb.

5. Using a hand pump grease gun, lubricate the (2) grooming reel shaft bearings. Pump only 2–3 pumps maximum to avoid permanently damaging the grease seals.
6. Check grooming reel height/depth setting.