Form No. 3354–339 Rev A

Operator Presence Kit

Greensmaster® 800/1000/1600 Mowers

Part No. 105–5363

Installation Instructions

Mount Switch

1. Remove (2) bottom, screws securing left console bracket to handle bar (Fig. 1).

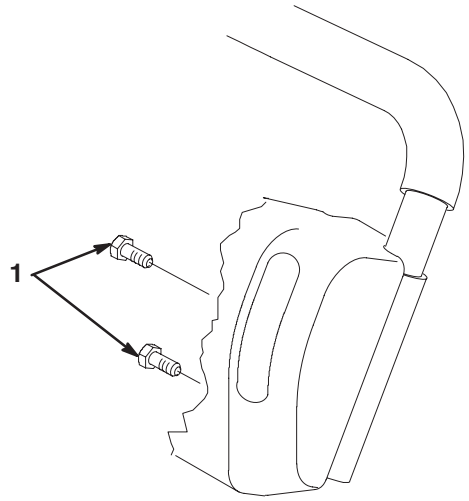

Figure 1

1. Left console bracket mounting screws

2. Mount switch bracket to console bracket and handle with (2) screws removed (Fig. 2).

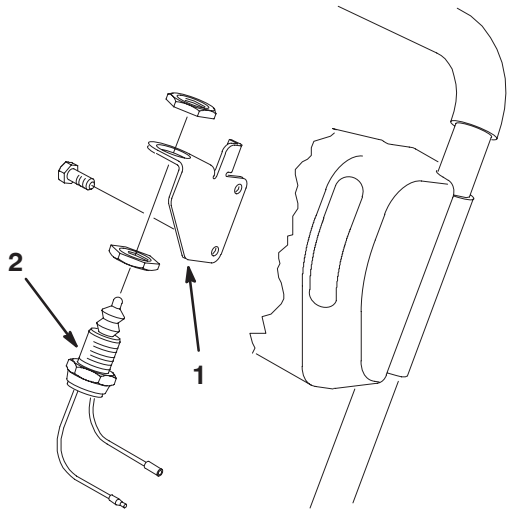

Figure 2

1. Switch bracket 2. Switch

3. Loosely mount switch to bracket with (2) nuts. Position a nut on each side of bracket when mounting. Do not tighten nuts at this time.

Mount Bail

1. Remove screw securing top of right and left console brackets to handle (Fig. 3). Discard screws.

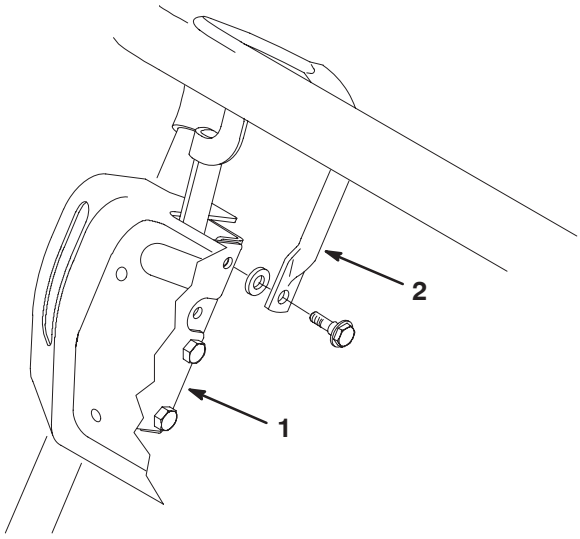

Figure 3

1. Right console bracket 2. Bail

2. Mount each end of bail to console bracket and handle with a shoulder bolt and spacer. Spacer to be positioned between console bracket and bail.

Connect Wire Harness

1. Plug bullet connectors from wire harness into switch connectors.
2. Insert wires into convoluted tubing and cable tie end of tubing. Tubing should extend up into console panel.
3. Secure wire harness to handle with (2) cable ties and to brake cable with a cable tie.
4. Locate interlock module on back of engine. Unplug and discard loop back connector from connector on interlock module.
5. Plug wire harness connector into module connector.

© 2005 by The Toro Company
8111 Lyndale Avenue South
Bloomington, MN 55420-1196

All Rights Reserved
Printed in the USA

Adjust Switch

1. Adjust switch so switch plunger is depressed .160” (4 mm) when bail is engaged. When bail is disengaged, switch plunger should be fully extended.

Affix Decals

1. For CE conformity, affix warning decal (Fig. 4) over existing warning decal on front of console panel.

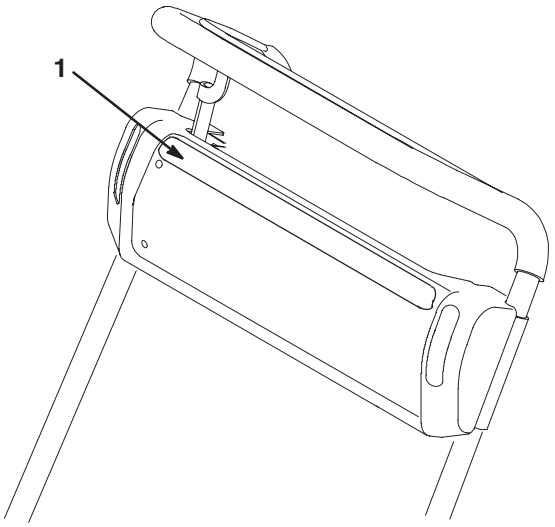

Figure 4

1. Warning decal

2. For CE conformity, affix the CE mark decal and noise rating decal onto rear of frame, as shown in figure 5.

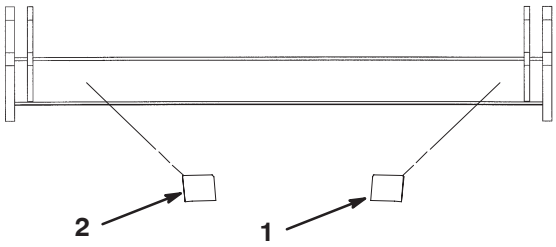

Figure 5

1. CE mark decal
2. Noise rating decal

Note: Use 98 LWA decal for Models 04052 and 04060.

Note: Use 96 LWA decal for Models 04048.

3. For ANSI B71.4–2004 compliance, affix the ANSI safety decal to the right side of the rear frame, as shown in figure 6.

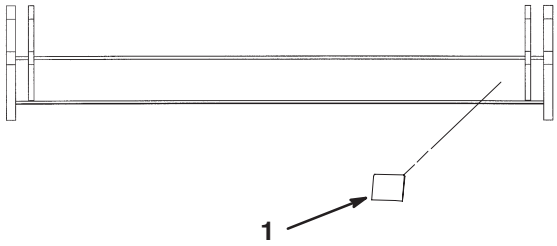

Figure 6

1. ANSI safety decal

4. For ANSI B71.4–2004 compliance, affix the danger decal (Fig. 7) on top of existing decal on cutting unit grass shield.

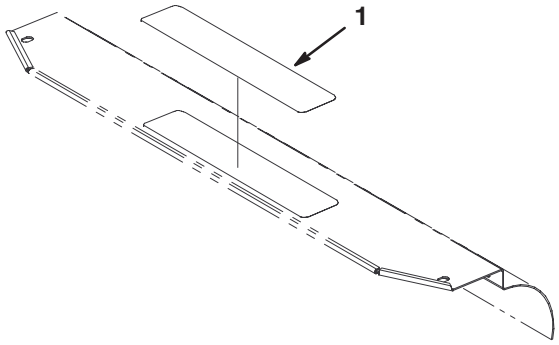

Figure 7

1. Danger decal