FORM NO. 3313-534

TORO®

MODEL NO. 20684-8000001 & UP

PARTS CATALOG

21" S.P. REAR BAGGER

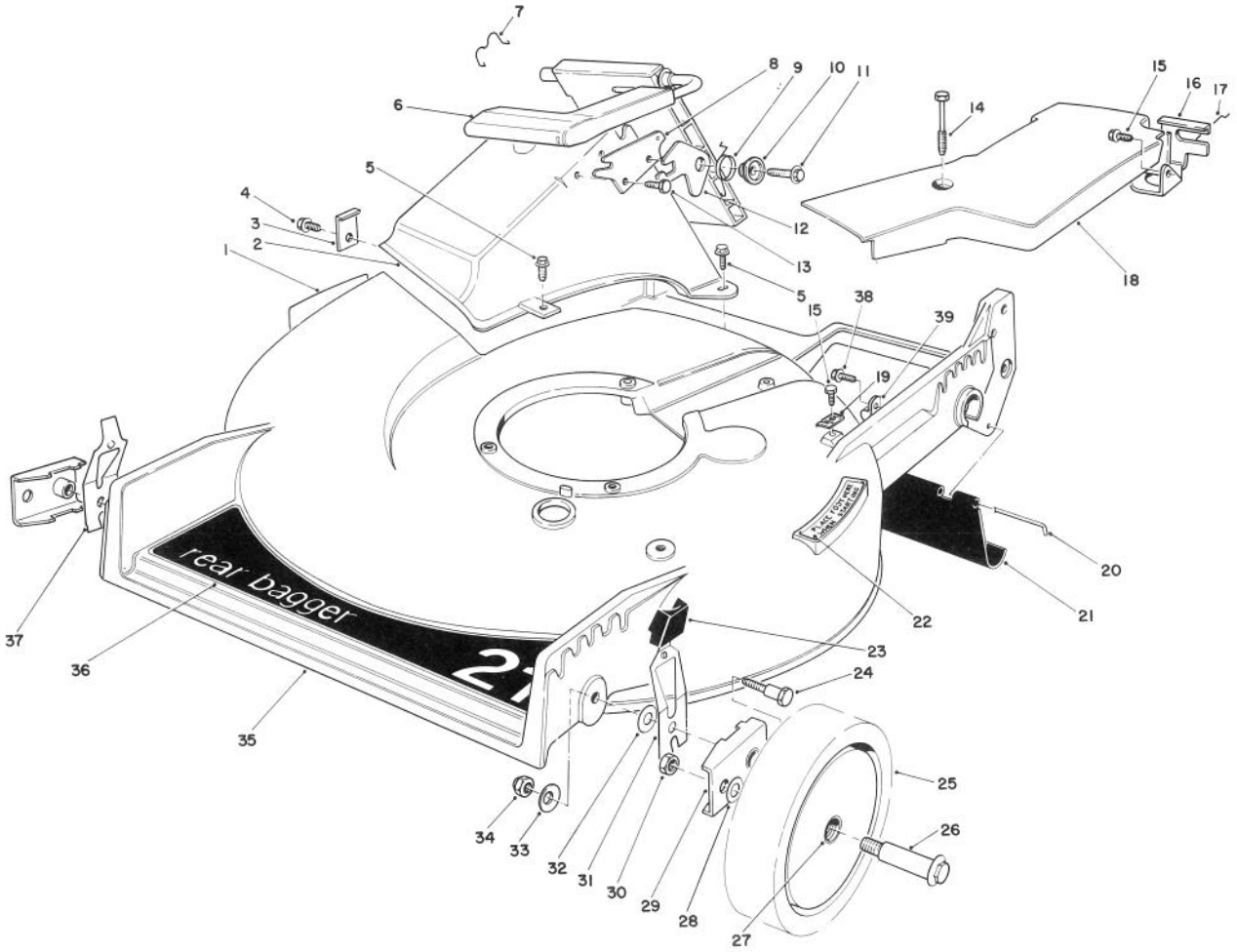

HOUSING ASSEMBLY

Ref. No.	Part No.	Description	No. Used
1	43-8480	Decal — Danger	1
2	46-3500	Tunnel — Discharge	1
3	47-6540	Clip — Tunnel	1
4	12-3270	Screw — Thread Forming	1
5	46-6811	Screw — Hex Washer Hd.	3
6	51-0200	Discharge Door Assembly	1
7	47-5840	Retainer — Door	1
8	23-1040	Plate — Latch	1
9	33-4860	Spring — Torsion	1
10	43-4840	Spacer — Latch	1
11	46-8091	Screw — Thread Forming Hex Washer Hd.	1
12	42-4010	Latch — Safety	1

Ref. No.	Part No.	Description	No. Used
13	46-8090	Screw — Thread Forming Hex Washer Hd.	1
14	37-7260	Capscrew — Special	2
15	32144-70	Screw — Thread Forming Hex Washer Hd.	2
16	62-3940	Bracket — Traction Adj.	1
17	46-7030	Retainer — Cable	1
18	62-4310	Cover — Belt	1
19	62-3720	Clamp — Cable	1
20	33-3208	Rod — Shield	1
21	44-0580	Shield — Rear	1
22	46-7370	Decal — Step Pad	1
23	25-7740	Knob — Arm	2

© The Toro Company — 1988

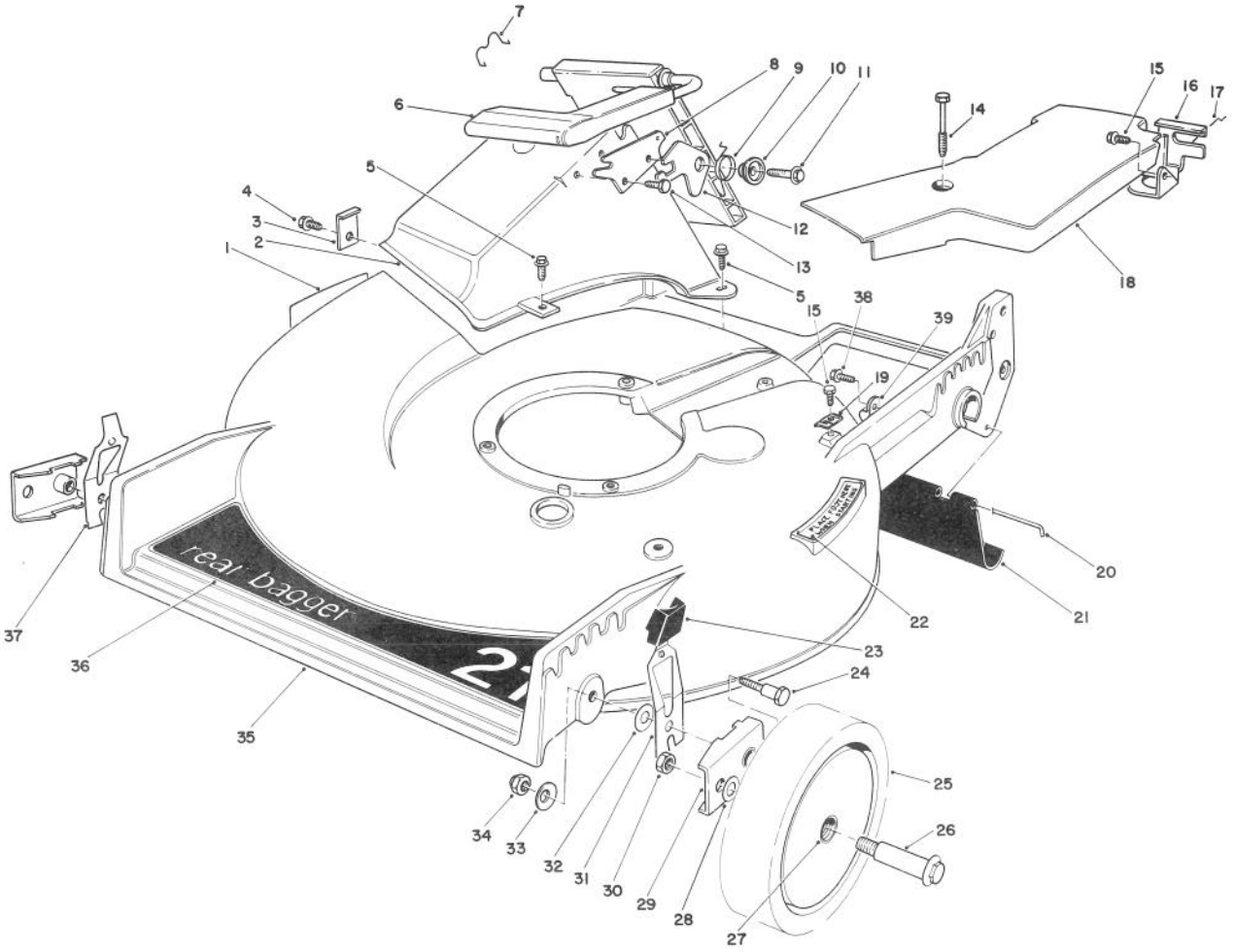

HOUSING ASSEMBLY (Continued)

Ref. No.	Part No.	Description	No. Used
24	44-5270	Screw — Pivot	2
25	11-9509	Wheel & Tire Assembly (Incl. Ref. #27)	2
26	27-6230	Bolt	2
27	27-6250	Bushing — Wheel	4
28	40-1940	Washer — Wheel	2
29	47-2940	Arm — Pivot	2
30	52-3620	Locknut	2
31	52-7480	Spring Arm Assembly	1
32	5-4460	Washer — Pivot	2

Ref. No.	Part No.	Description	No. Used
33	3290-456	Washer — Belleville	2
34	3296-29	Locknut	2
35	11-4099	Housing — 21" (Incl. Ref. #1, 5 & 22)	1
36	44-0450	Decal — 21" Rear Bagger	1
37	52-7490	Spring Arm Assembly	1
38	12-5450	Screw — Self-Tapping Hex. Washer Hd.	1
39	2412-83	Clamp	1

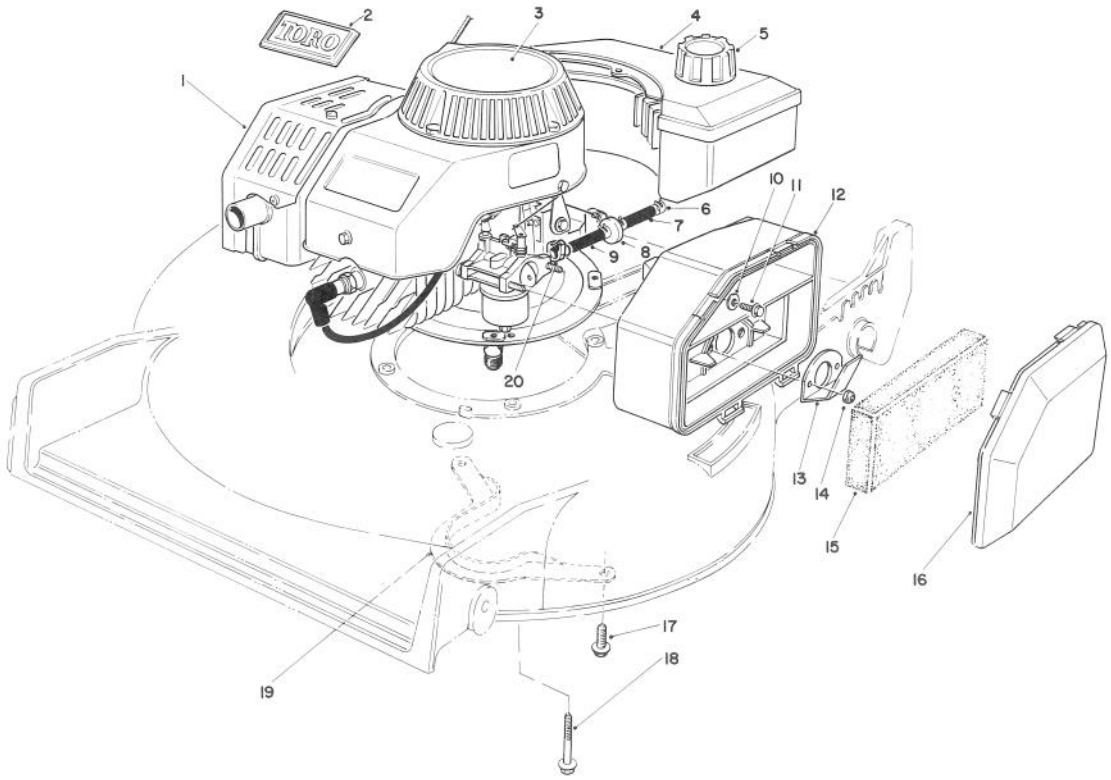

ENGINE ASSEMBLY
(used on units with Serial No. 8000001 thru 8003897)

Ref. No.	Part No.	Description	No. Used
1	51-0401	Engine (Complete)	1
2	46-8290	Plate — Logo, Toro	1
3	57-9870	Decal — Recoil	1
4	81-0042	Fuel Tank Assembly	1
5	55-3575	Gas Cap	1
6	2412-95	Clamp — Fuel Line	3
7	51-3215	Fuel Line	1
8	56-6360	Filter — Fuel	1
9	51-3216	Fuel Line	1
10	3256-16	Washer — Flat	1

Ref. No.	Part No.	Description	No. Used
11	51-2690	Capscrew — Hex Washer Hd.	1
12	81-0110	Air Cleaner	1
13	81-0140	Deflector — Spitback	1
14	49-7810	Locknut	2
15	81-0100	Foam Element — Air Cleaner	1
16	81-0120	Cover — Air Cleaner	1
17	49-2040	Screw — Thread Forming	2
18	66-9300	Capscrew — Hex Flange Hd.	4
19	62-3780	Guide — Belt	1
20	51-3200	Clamp	1

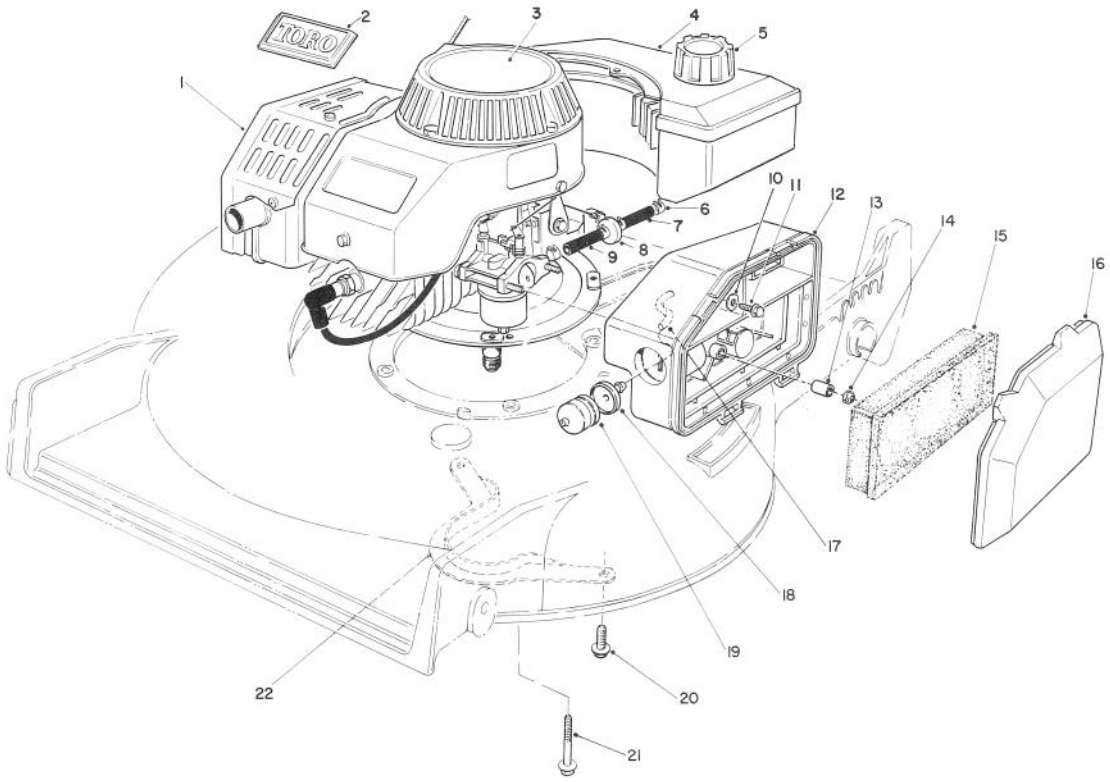

ENGINE ASSEMBLY
(used on units with Serial No. 8003898 & up)

Ref. No.	Part No.	Description	No. Used
1	51-0402	Engine (Complete)	1
2	46-8290	Plate — Logo, Toro	1
3	57-9870	Decal — Recoil	1
4	81-0042	Fuel Tank Assembly	1
5	55-3575	Gas Cap	1
6	2412-95	Clamp — Fuel Line	4
7	51-3215	Fuel Line	1
8	56-6360	Filter — Fuel	1
9	51-3216	Fuel Line	1
10	3256-16	Washer — Flat	1
11	51-2690	Capscrew — Hex Washer Hd.	1

Ref. No.	Part No.	Description	No. Used
12	63-9330	Air Cleaner	1
13	62-3980	Sleeve	2
14	50-7180	Locknut	2
15	63-9380	Foam Element — Air Cleaner	1
16	63-9340	Cover — Air Cleaner	1
17	44-3172	Hose Primer	1
18	44-2750	Body Primer	1
19	44-3100	Bulb — Primer	1
20	66-9300	Screw — Thread Forming	2
21	3234-11	Capscrew — Hex Flange Hd.	4
22	62-3780	Guide — Belt	1

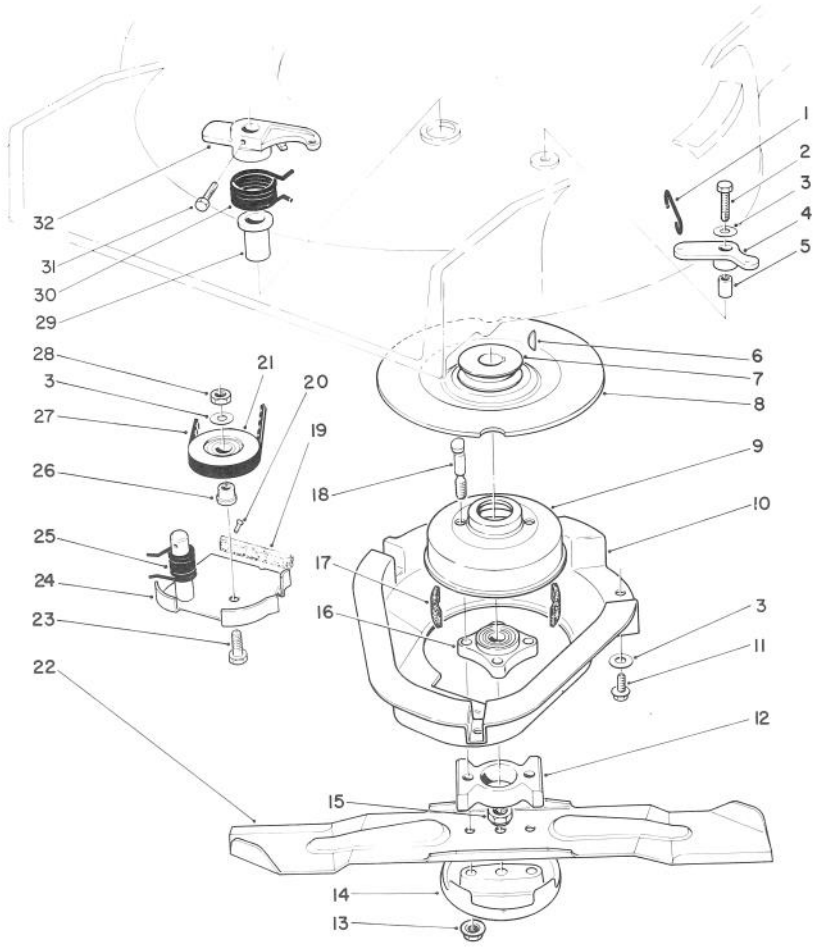

BLADE BRAKE CLUTCH ASSEMBLY

Ref. No.	Part No.	Description	No. Used
1	49-2810	Link — Control	1
2	32104-107	Screw — Self-Tapping Hex Hd.	1
3	3256-23	Washer — Plain	5
4	49-7960	Bell Crank	1
5	49-7950	Sleeve — Bell Crank	1
6	3257-3	Key — Woodruff	1
7	62-7560	Pulley — Driver	1
8	56-6160	Flywheel	1
9	56-6170	Drum — Brake	1
10	46-5690	Shield	1
11	32144-70	Screw — Thread Forming Hex Washer Hd.	3
12	62-4280	Spacer — Blade	1
13	54-9190	Nut — Lock	2
14	42-0910	Cup — Anti Scalp	1
15	3296-33	Nut — Lock	1
16	42-6890	Hub Assembly	1

Ref. No.	Part No.	Description	No. Used
17	52-3480	Dampener — Vibration	2
18	42-3190	Bolt — Blade	2
19	42-0890	Pad — Brake	1
20	3295-23	Rivet — Semi Tubular	2
21	46-5650	Pulley Idler	1
22	42-1000	Blade 21"	1
23	322-16	Capscrew	1
24	49-7920	Brake Plate (Incl. Ref. #19 & 20)	1
25	46-5670	Spring — Torsion Lower	1
26	46-5630	Hub — Idler Pulley	1
27	42-0884	V-Belt	1
28	3296-47	Nut — Lock	1
29	46-6680	Bushing — Flanged	1
30	49-7970	Spring — Torsion Upper	1
31	32104-96	Screw — Self Tapping Hex Hd.	1
32	49-2820	Lever	1

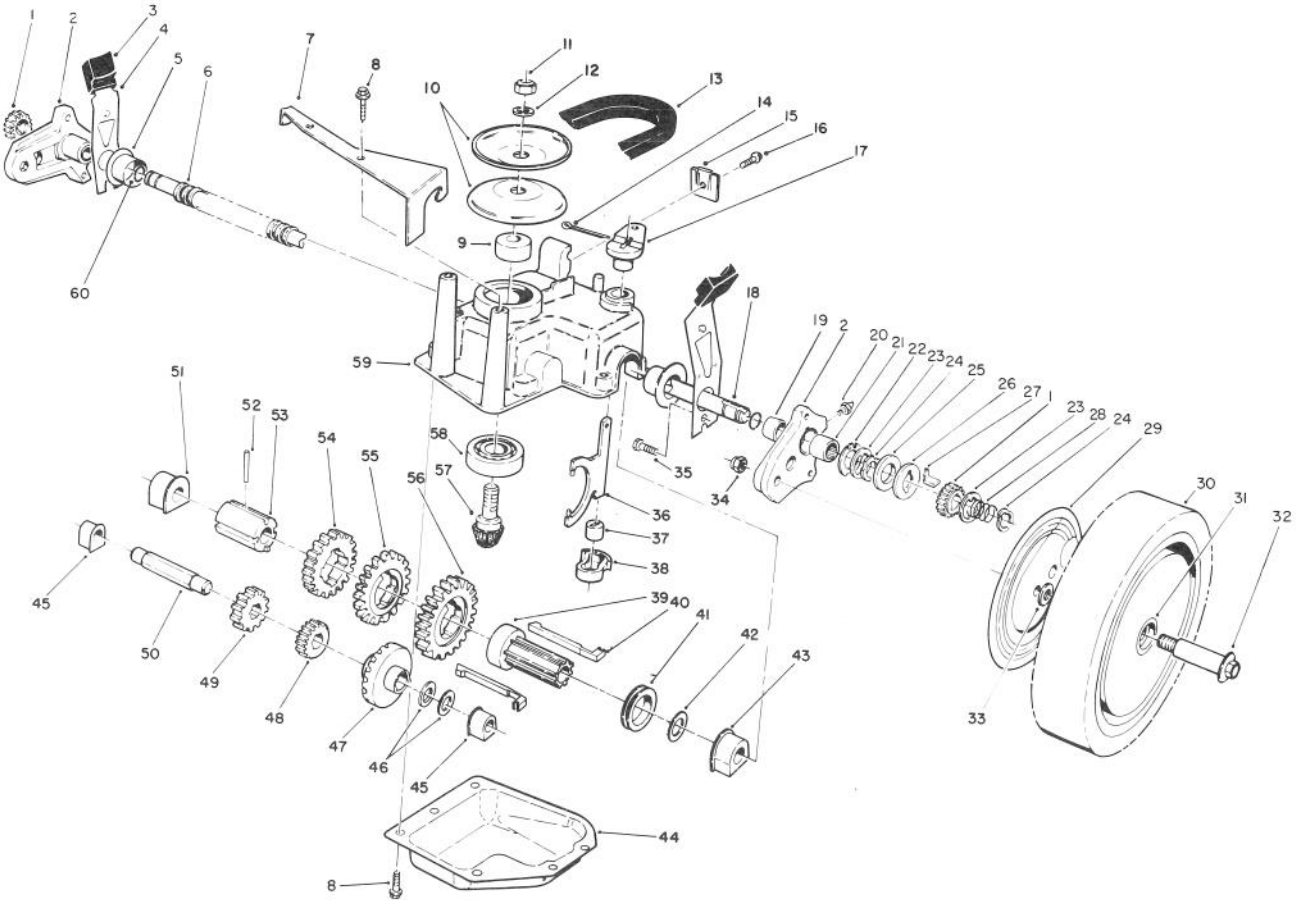

GEAR CASE ASSEMBLY

Ref. No.	Part No.	Description	No. Used
1	65-4750	Pinion	2
2	63-8700	Pivot Arm Assembly (Incl. Ref. #19, 20, 21)	2
3	25-7740	Knob — Arm	2
4	63-8720	Spring Arm Assembly	2
5	42-3520	End Cap	2
6	24-7922	Cover — Drive Shaft	1
7	62-4320	Bracket — Belt Guide	1
8	49-2040	Screw — Self Tapping	8
9	62-6660	Spacer	1
10	60-8840	Pulley — Half	2
11	3296-5	Nut — Lock	1
12	3256-24	Washer — Flat	1
13	62-3900	V-Belt	1
14	3272-10	Pin — Cotter	1
15	46-5610	Cable Clamp	1
16	32144-70	Screw — Thread Forming	1
17	60-8820	Lever — Shift	1
18	65-4770	Shaft — Output	1
19	47-2890	Bushing	2
20	302-56	Fitting — Grease	2
21	48-2060	Needle — Bearing	2

Ref. No.	Part No.	Description	No. Used
22	65-4730	Thrust Washer	4
23	65-4740	Thrust Washer	2
24	65-2720	Retaining Ring	4
25	65-4710	Friction Ring	2
26	65-4760	Washer — Clutch	2
27	66-6050	Key — Rocker L.H.	1
*	66-6040	Key — Rocker R.H	1
28	65-4720	Spring	2
29	65-5270	Cover — Wheel	2
30	51-2740	Wheel — Tire & Gear Assembly (Incl. Ref. #31)	2
31	27-2650	Bushing — Wheel	4
32	27-6231	Wheel Bolt	2
33	40-1940	Washer — Wheel Bolt	4
34	52-3620	Nut — Lock	2
35	32144-85	Screw	2
36	60-8870	Yoke — Shift	1
37	29-9570	Bushing — Yoke	1
38	60-8810	Retainer — Shift Fork	1
39	60-8780	Sleeve — Shift Key	1
40	60-8740	Key Shift	2
41	60-8760	Collar — Shift	1

*Not Illustrated

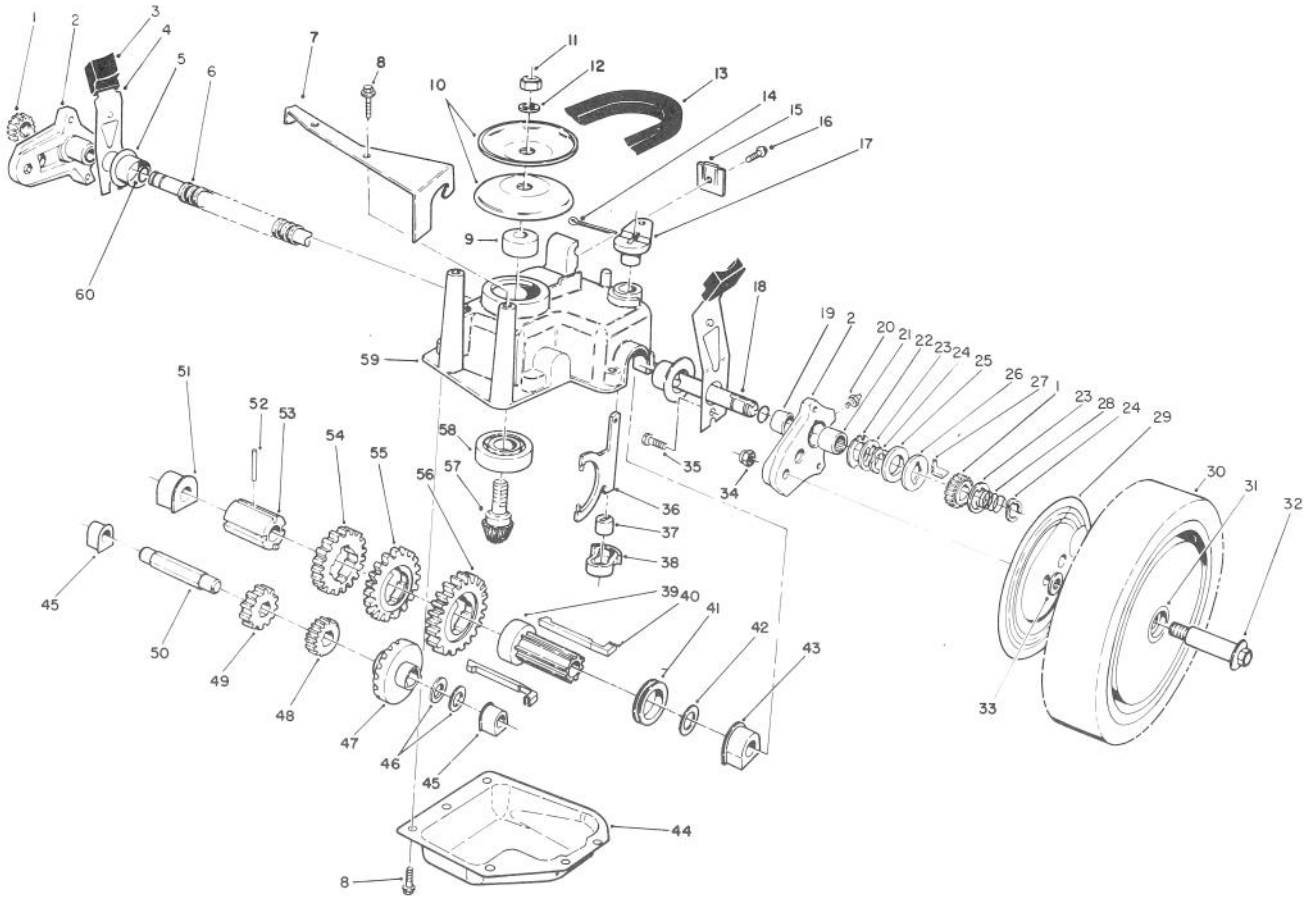

GEAR CASE ASSEMBLY (Continued)

Ref. No.	Part No.	Description	No. Used
42	36-4780	Washer — Thrust	1
43	60-8770	Bushing — Output Shaft	1
44	60-8730	Cover — Gear Case	1
45	60-8750	Bushing — Int. Shaft	2
46	36-4791	Washer — Thrust	2
47	55-3760	Gear — Pinion 15 Tooth	1
48	55-3780	Gear — Pinion 20 Tooth	1
49	55-3800	Gear — Pinion	1
50	60-8800	Shaft — Intermediate	1
51	60-8850	Bushing — Output Shaft	1

Ref. No.	Part No.	Description	No. Used
52	32121-120	Pin — Coil	1
53	60-8790	Sleeve — Gear	1
54	55-3810	Gear — 39 Tooth 3rd Gear	1
55	55-3790	Gear — 44 Tooth 2nd Gear	1
56	55-3770	Gear — 49 Tooth 1st Gear	1
57	60-8890	Pinion — Bevel	1
58	38-7820	Bearing — Ball	1
59	60-8710	Gear Case — Upper	1
60	237-153	O-Ring	2
*	62-6672	Gear Case Complete	1

*Not Illustrated

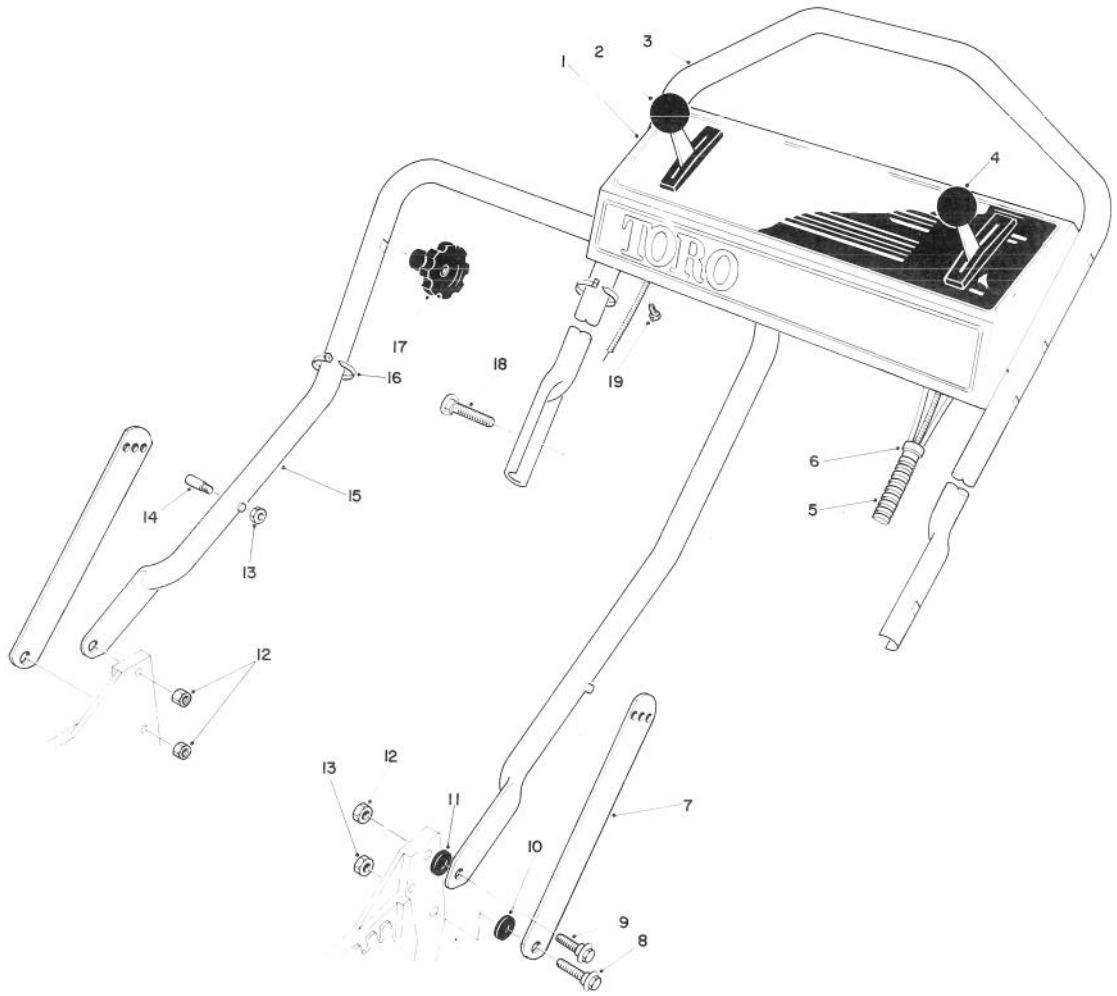

HANDLE ASSEMBLY

Ref. No.	Part No.	Description	No. Used
1	13-2549	Panel — Control	1
2	46-5430	Control — Ground Speed (Bend Type #1) (Sheath Lg. 42¼ inches) (Wire Lg. 2⅜ inches)	1
3	46-5411	Handle — Upper	1
4	49-4183	Control — Throttle (Bend Type #1) (Sheath Lg. 54¼ inches) (Wire Lg. 2½ inches)	1
5	46-6440	Cover Control Cables	1
6	2412-50	Clip — Convoluted Tubing	4
7	43-1370	Latch — Handle	2

Ref. No.	Part No.	Description	No. Used
8	27-7210	Screw — Shoulder	2
9	27-7211	Screw — Shoulder	2
10	3-3287	Spacer — Handle Latch	2
11	55-8060	Spacer — Handle Latch	2
12	3296-29	Nut — Lock	3
13	3296-47	Nut — Lock	3
14†	49-2750	Pin — Handle	2
15	43-1361	Lower Handle Assembly	1
16	3290-378	Cable Tie	3
17	19-4050	Knob — Handle Release	2
18	17-9421	Screw — Handle	2
19	32104-76	Screw — Self Tapping Slotted	4

†Service Replacement Parts

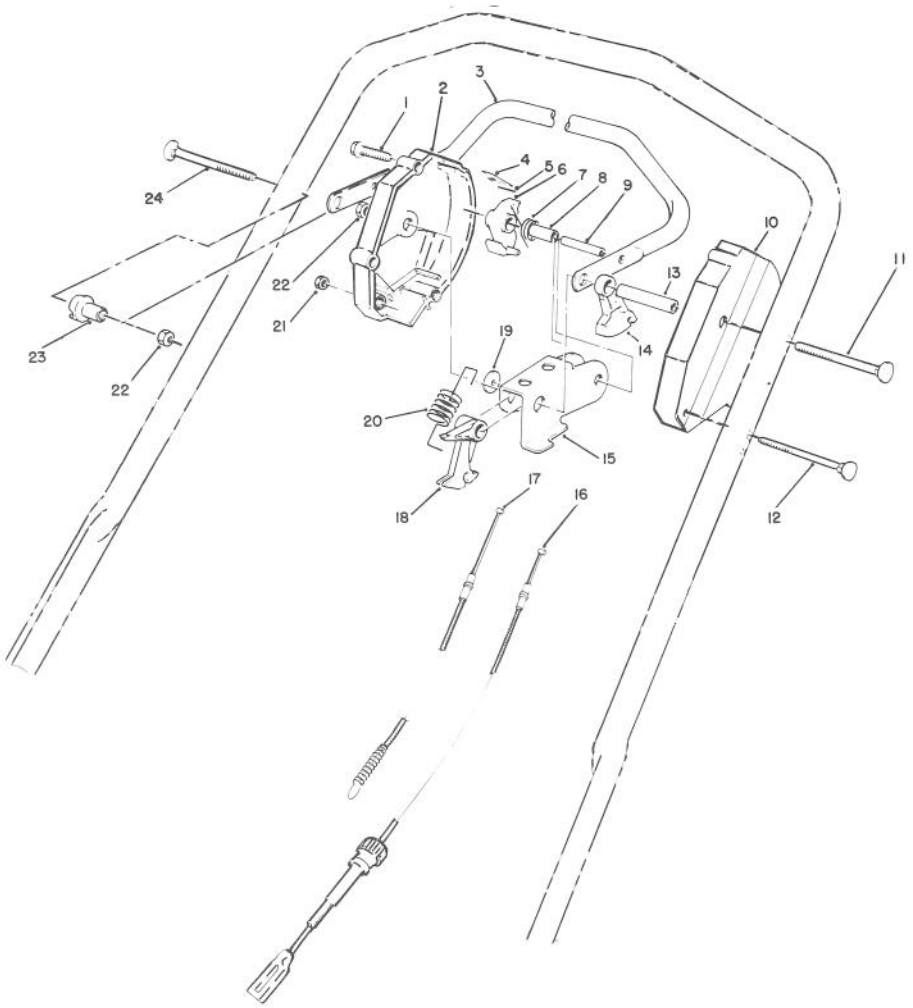

TRACTION CONTROL ASSEMBLY

Ref. No.	Part No.	Description	No. Used
1	46-7040	Screw — Thread Forming Hex Washer Hd.	3
2	66-0160	Housing — Control R.H.	1
3	52-7430	Control Bar Assembly	1
4	52-7410	Spring — Leaf	1
5	57-6290	Pin — Insert	1
6	46-5530	Hook — Control	1
7	46-5510	Spring — Torsion	1
8	46-5550	Bushing	1
9	32121-9	Pin — Coil	1
10	46-5460	Housing — Control L.H.	1
11	17-9422	Screw — Handle	1
12	46-6431	Screw — Handle	1

Ref. No.	Part No.	Description	No. Used
13	46-5590	Spacer	1
14	46-5520	Lever — Traction	1
15	62-3710	Rocker	1
16	46-5480	Cable — Traction	1
17	62-3770	Cable — Clutch	1
18	46-5540	Lever — Cable	1
19	46-5600	Washer — Nylon	1
20	65-5990	Spring — Extension	1
21	3296-8	Locknut	1
22	3296-58	Locknut	2
23	49-1630	Support — Spacer	1
24	17-9421	Screw — Handle	1

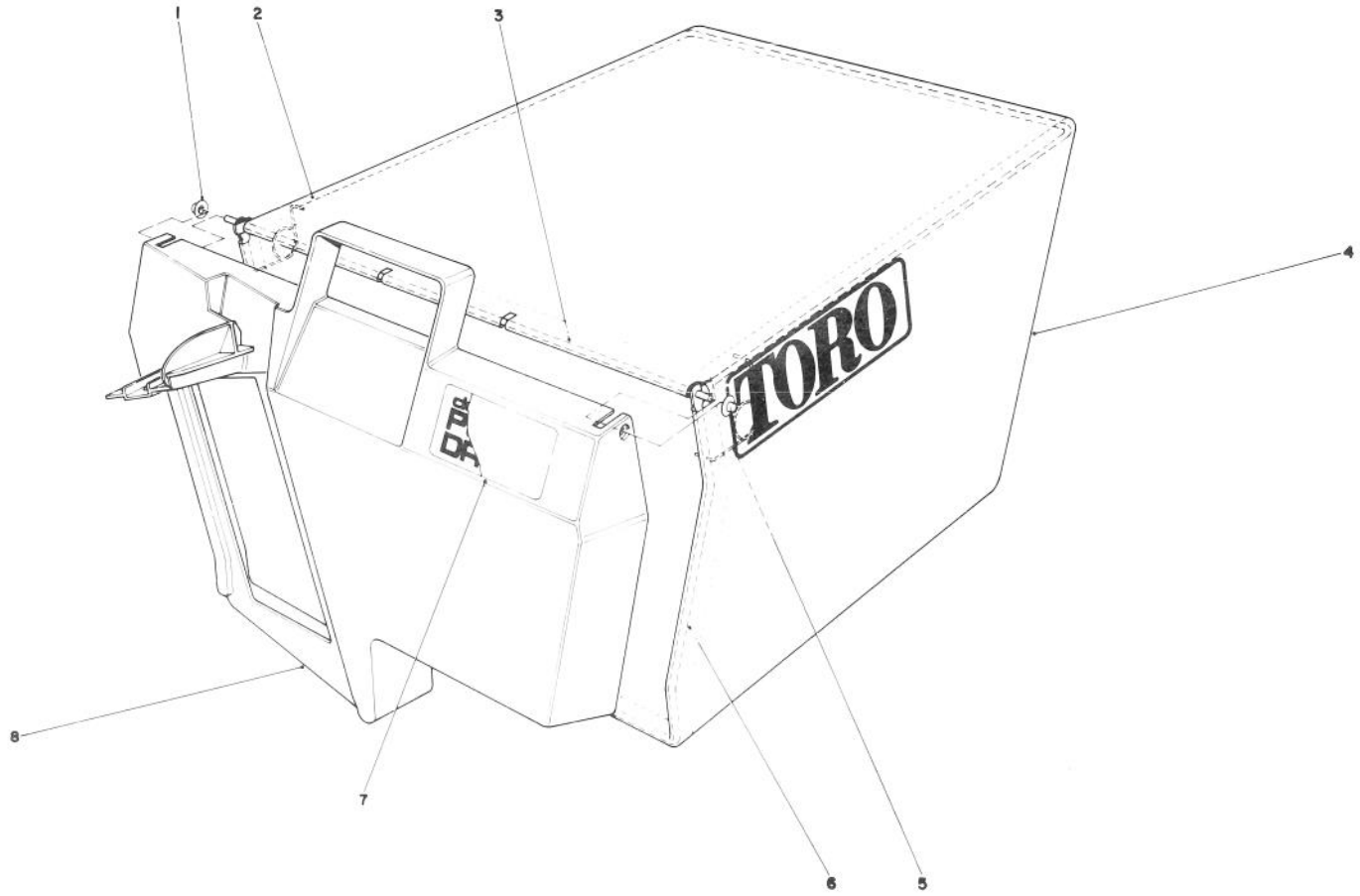

GRASS BAG ASSEMBLY NO. 11-0189

Ref. No.	Part No.	Description	No. Used
1	3290-422	Push Nut	2
2	42-4030	Bag Frame Upper	1
3	33-4820	Hinge Bag Door	1
4	8-2759	Grass Bag	1

Ref. No.	Part No.	Description	No. Used
5	36-6910	Spring	2
6	42-4020	Frame Bag	1
7	40-2240	Decal — Bag Door	1
8	37-1392	Door Grass Bag	1

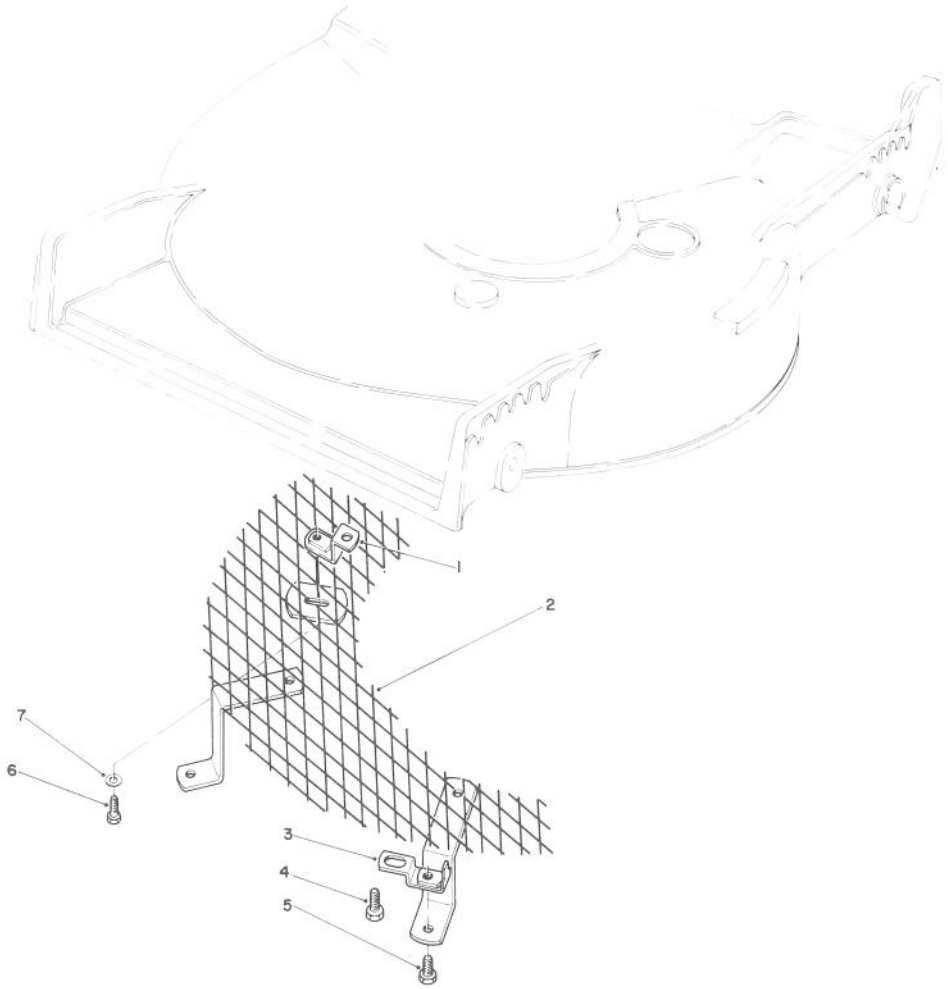

LEAF SHREDDER KIT MODEL NO. 59157 (Optional)

Ref. No.	Part No.	Description	No. Used
1	47-6260	Bracket	1
2	47-6230	Screen	1
3	46-4880	Mounting Bracket	2
4	32144-11	Screw — Self Tapping	3

Ref. No.	Part No.	Description	No. Used
5	321-3	Capscrew, Hex Hd.	2
6	321-5	Capscrew, Hex Hd.	1
7	3256-1	Washer	1

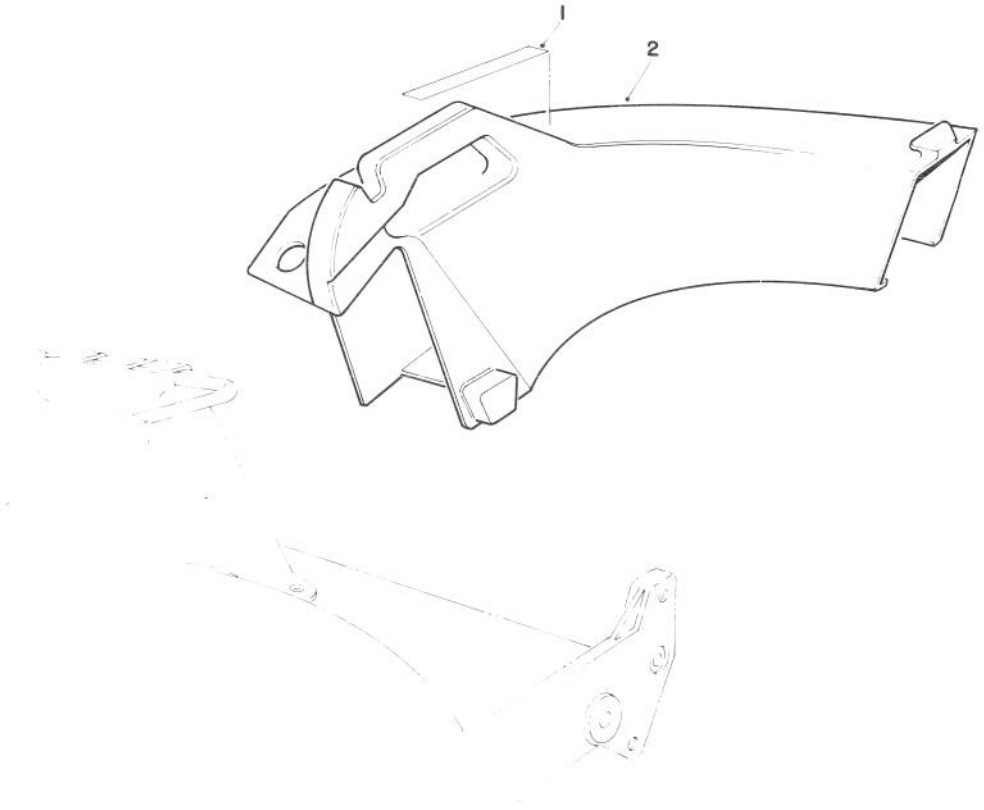

SIDE DISCHARGE CHUTE MODEL NO. 59168 (Optional)

Ref. No.	Part No.	Description	No. Used
1	39-9120	Decal — Caution	1

Ref. No.	Part No.	Description	No. Used
2	12-2239	Chute Discharge (Incl. Ref. #1)	1

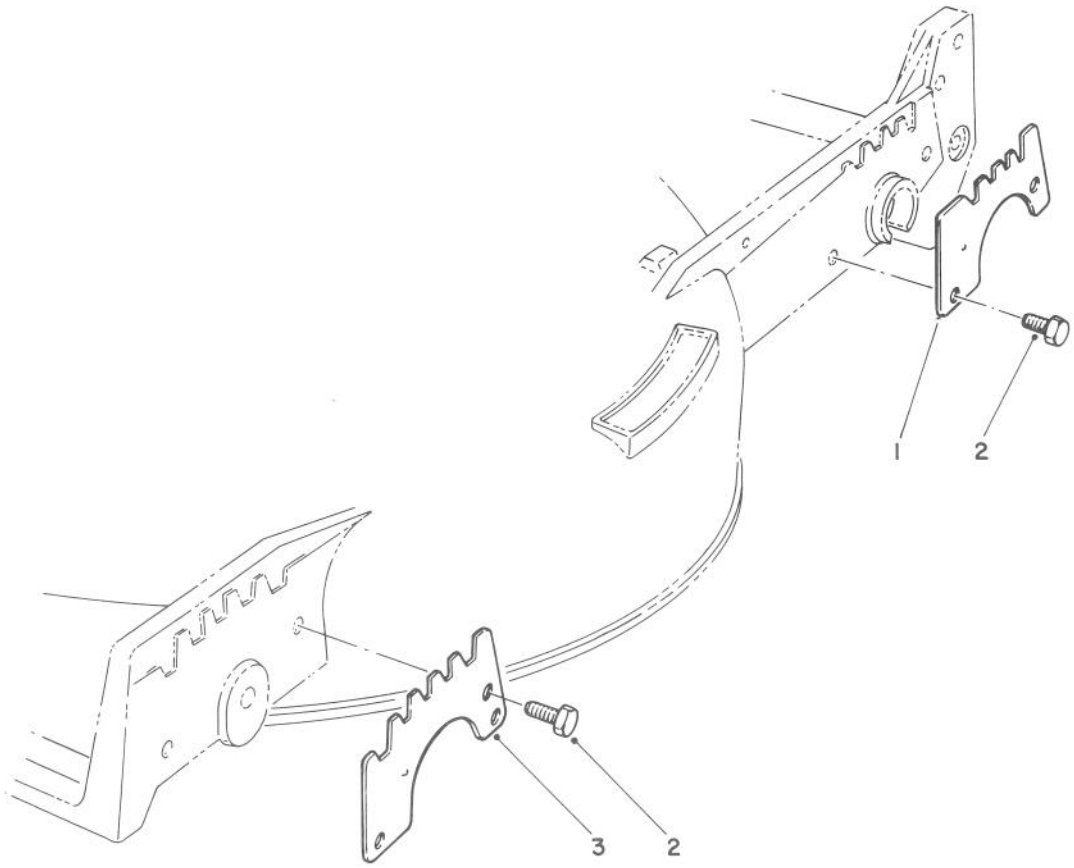

WEAR PLATE KIT NO. 49-4080 (Optional)

Ref. No.	Part No.	Description	No. Used
1	49-4070	Plate — Wear, Rear	2
2	32104-17	Screw — Thread Forming	8

Ref. No.	Part No.	Description	No. Used
3	43-5050	Plate — Wear, Front	2

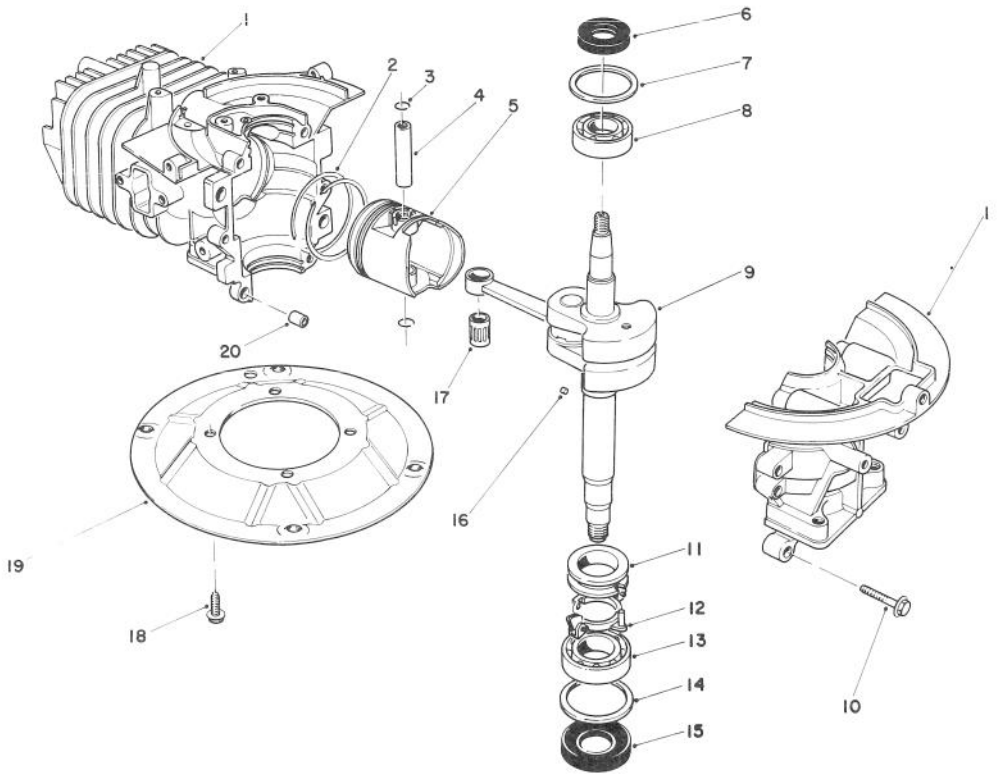

ENGINE ASSEMBLY
(Model No. 47PG6 & 47PH7)

Ref. No.	Part No.	Description	No. Used
1	81-2800	Crankcase/Cylinder Assembly	1
2	81-0590	Ring Set	1
3	81-0620	Circlip	2
4	81-0600	Wrist Pin	1
5	81-0580	Piston — 58 mm	1
6	81-0720	Oil — Seal, Upper	1
7	81-0710	Thrust Washer — Upper	1
8	81-0690	Bearing — Upper, 20 mm	1
9	81-4670	Crankshaft/Connecting Rod Assembly	1
10	81-0540	Bolt (30 mm Lg.)	6

Ref. No.	Part No.	Description	No. Used
11	81-0770	Collar — Governor	1
12	81-0750	Bracket — Governor Flyweight	1
13	81-0700	Bearing — Lower, 25 mm	1
14	81-0730	Thrust Washer — Lower	1
15	81-0740	Oil Seal — Lower	1
16	81-0760	Pin — Governor	1
17	81-0610	Bearing — Wrist Pin	1
18	81-0570	Bolt	4
19	81-0560	Plate — Mounting	1
20	81-0520	Pin — Crankcase Dowel	2
*	12-5509	Short Block Assembly	1

*Not Illustrated

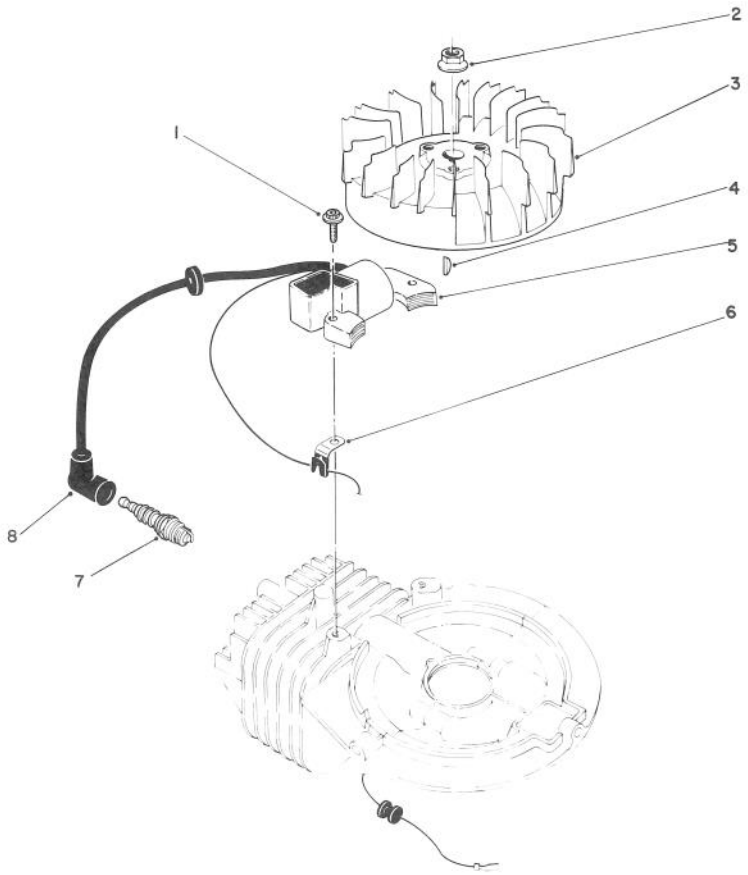

IGNITION ASSEMBLY
(Model No. 47PG6 & 47PH7)

Ref. No.	Part No.	Description	No. Used
1	81-2050	Capscrew — Allenhead	2
2	81-1330	Nut	1
3	81-2810	Flywheel-Magneto	1
4	81-2370	Key — Flywheel	1
5	81-2820	Coil/Ignition Assembly	1

Ref. No.	Part No.	Description	No. Used
6	81-1480	Clamp	1
7	81-0181	Spark Plug	1
8	81-1500	Cover — Spark Plug	1
*	41-7650	Puller — Flywheel	1

*Not Illustrated

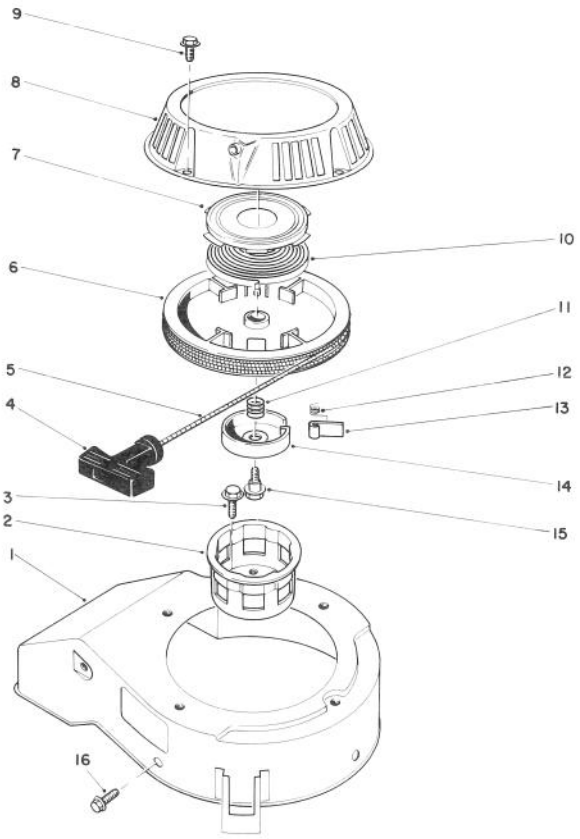

RECOIL ASSEMBLY
(Model No. 47PG6 & 47PH7)

Ref. No.	Part No.	Description	No. Used
1	81-2070	Cover — Cooling Fan	1
2	81-1290	Cup — Starter Pulley	1
3	81-1300	Bolt (16 mm Lg.)	3
4	81-1630	Handle — Recoil	1
5	81-1270	Rope	1
6	81-1210	Reel — Rope Pulley	1
7		Retainer — Recoil Spring	1
8	81-2090	Case — Recoil	1
9	81-1280	Bolt (10 mm Lg.)	4
10		Spring — Recoil	1
11	81-1240	Spring — Compression	1
12	81-1220	Spring — Dog	1
13	81-1230	Dog	1

Ref. No.	Part No.	Description	No. Used
14	81-1250	Retainer — Dog	1
15	81-1260	Bolt — Shoulder	1
16	81-1170	Bolt — Self Tapping (15 mm Lg.)	3
*	81-2040	Starter Assembly (Model 47PG6) (Incl. Ref. #4-15)	1
*	81-5480	Starter Assembly (Model 47PH7) (Incl. Ref. #4-15)	1
*	81-2300	Spring & Retainer (Incl. Ref. #7 & 10)	1

*Not Illustrated

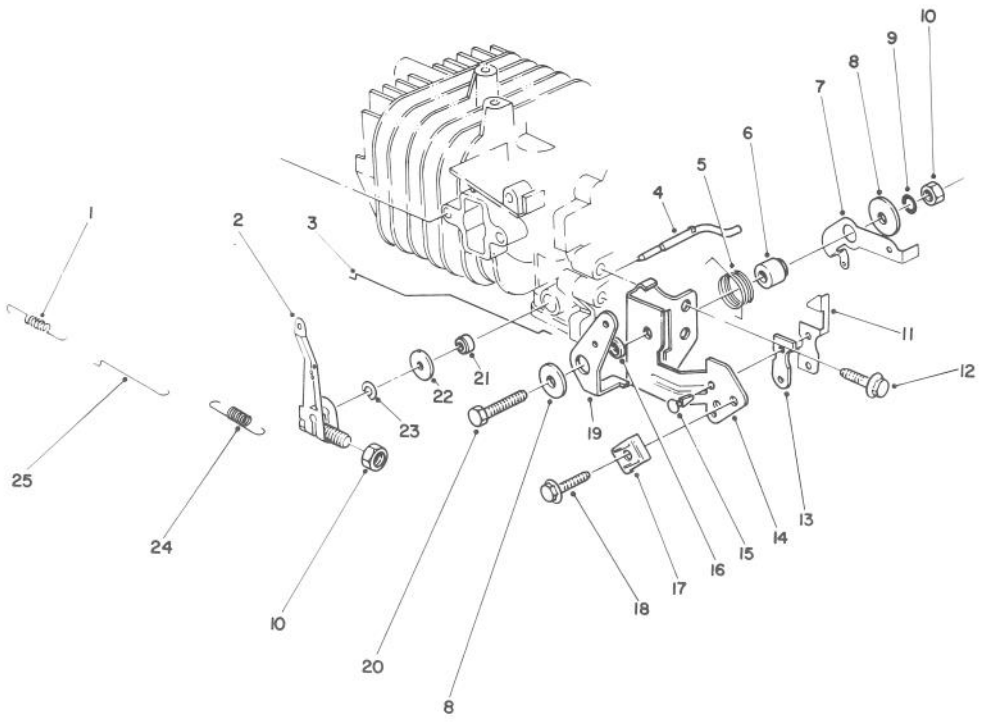

GOVERNOR ASSEMBLY
(Model No. 47PG6 & 47PH7)

Ref. No.	Part No.	Description	No. Used
1	81-0920	Spring — Carburetor Rod	1
2	81-2840	Arm — Governor/Bolt Assembly (Model 47PG6)	1
2	81-5420	Arm — Governor/Bolt Assembly (Model 47PH7)	1
3	81-1720	Rod — Choke (Model 47PG6)	1
3	81-5410	Rod — Choke (Model 47PH7)	1
4	81-0840	Shaft — Governor	1
5	81-2460	Spring — Choke Control Lever	1
6	81-1770	Spacer — Governor Spring Lever	1
7	81-2850	Lever — Governor Spring	1
8	81-1750	Washer — Governor Control Lever	2
9	81-1450	Washer — Lock	1
10	81-0900	Nut	2

Ref. No.	Part No.	Description	No. Used
11	81-1170	Bolt — Self Tapping 15mm Lg.)	1
12	81-1840	Terminal — Kill Switch	1
13	81-1830	Insulator — Kill Switch	1
14	81-2420	Bracket — Throttle Control	1
15	81-1850	Rivet — Kill Switch	2
16	81-2470	Spacer — Choke Control Lever	1
17	81-2430	Clamp — Cable	1
18	50-0130	Bolt — Cable Clamp	1
19	81-1710	Lever — Choke Control	1
20	81-1730	Bolt — Throttle Control Bracket	1
21	81-0850	Oil Seal — Governor Shaft	1
22	81-0860	Washer	1
23	81-0870	E-Ring	1
24	81-2830	Spring — Governor	1
25	81-0910	Rod — Carburetor	1

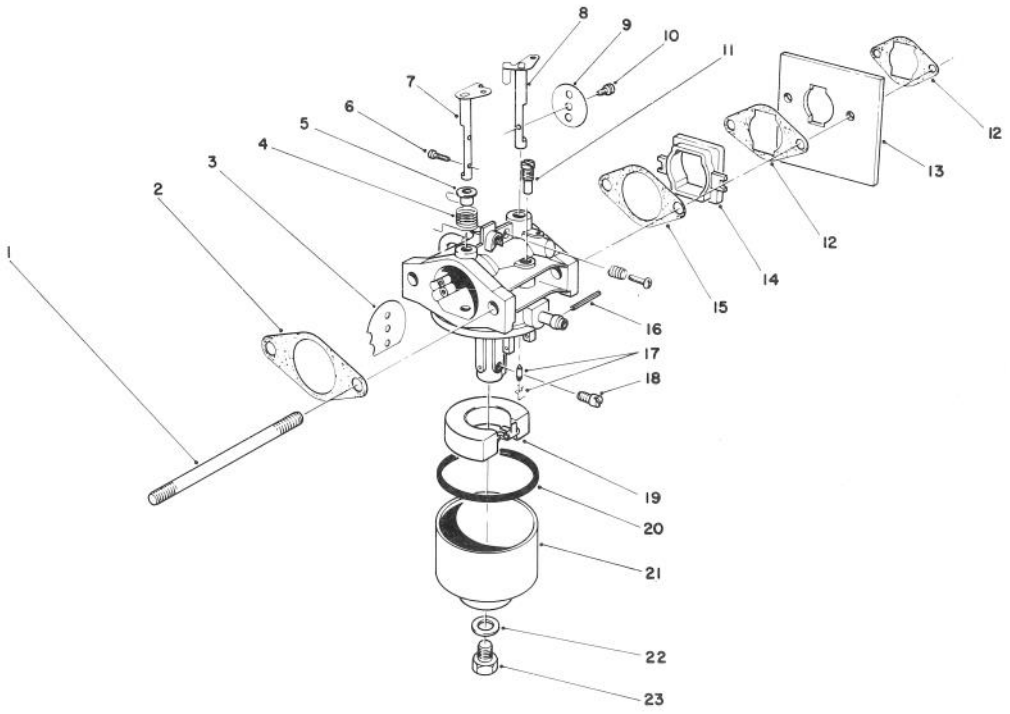

CARBURETOR ASSEMBLY
(Model No. 47PG6)
(used on units with Serial No. 8000001 - 8003897)

Ref. No.	Part No.	Description	No. Used
1	81-2240	Stud Bolt — Carburetor	2
2	81-0090	Gasket	1
3	81-4950	Valve — Choke	1
4	81-0230	Spring — Choke	1
5	81-0220	Bushing — Choke Valve	1
6	81-2160	Screw — Choke Valve	2
7	81-1950	Shaft — Choke	1
8	81-0250	Shaft — Throttle	1
9	81-0260	Valve — Throttle	1
10	81-0270	Screw — Throttle Valve	1
11	81-1030	Jet — Pilot # (40)	1
12	81-2320	Gasket — Shield	2
13	81-2330	Shield — Carburetor	1
14	81-2190	Insulator — Carburetor	1
15	81-0780	Gasket	1

Ref. No.	Part No.	Description	No. Used
16	81-0980	Pin — Float	1
17	81-4910	Needle Valve — Float	1
18	81-1940	Jet — Main # (76.3)	1
*	81-2340	Jet — Main # (72.5) High Alt., Above 6,000 (Optional)	1
19	81-0970	Float	1
20	81-1010	Gasket — Float Bowl	1
21	81-1610	Bowl — Float	1
22	81-1020	Gasket — Bowl Screw	1
23	81-1000	Screw — Bowl	1
*	12-6379	Carburetor Kit (Incl. Ref. #2, 15, 17, 20 & 22)	1
*	81-4900	Carburetor Assembly Complete	1

*Not Illustrated

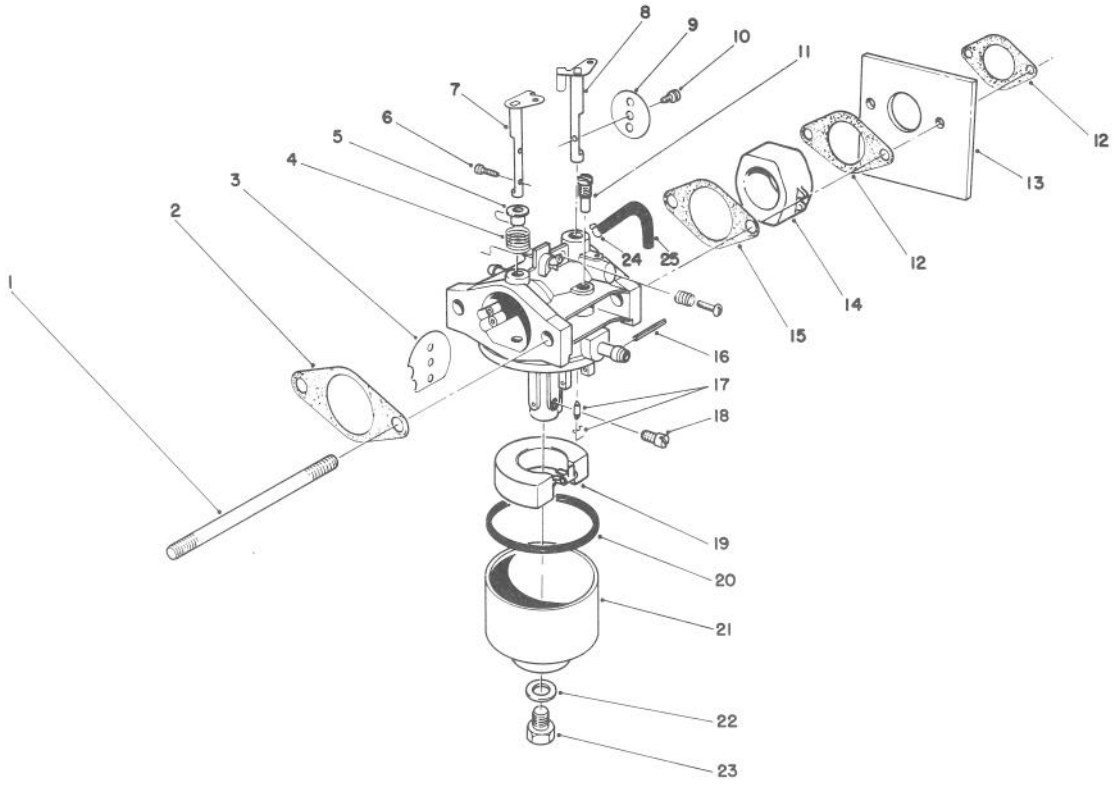

CARBURETOR ASSEMBLY
(Model No. 47PH7)
(used on units with Serial No. 8003898 & up)

Ref. No.	Part No.	Description	No. Used
1	81-5450	Stud Bolt — Carburetor	2
2	81-0090	Gasket	1
3	81-0240	Valve — Choke	1
4	81-0230	Spring — Choke	1
5	81-0220	Bushing — Choke Valve	1
6	81-2160	Screw — Choke Valve	2
7	81-1950	Shaft — Choke	1
8	81-0250	Shaft — Throttle	1
9	81-0260	Valve — Throttle	1
10	81-0270	Screw — Throttle Valve	1
11	81-1030	Jet — Pilot # (40)	1
12	81-2320	Gasket — Shield	2
13	81-5490	Shield — Carburetor	1
14	81-5440	Insulator — Carburetor	1
15	81-0780	Gasket	1
16	81-0980	Pin — Float	1

Ref. No.	Part No.	Description	No. Used
17	81-4910	Needle Valve — Float	1
18	81-1050	Jet — Main # (77.5)	1
*	81-2340	Jet — Main # (72.5) High Alt., Above 6,000 (Optional)	1
19	81-0970	Float	1
20	81-1010	Gasket — Float Bowl	1
21	81-1610	Bowl — Float	1
22	81-1020	Gasket — Bowl Screw	1
23	81-1000	Screw — Bowl	1
24	81-5460	Clamp	1
25	81-5470	Tube — Vent	1
*	12-6379	Carburetor Kit (Incl. Ref. #2, 15, 17, 20 & 22)	1
*	81-5430	Carburetor Assembly Complete	1

*Not Illustrated

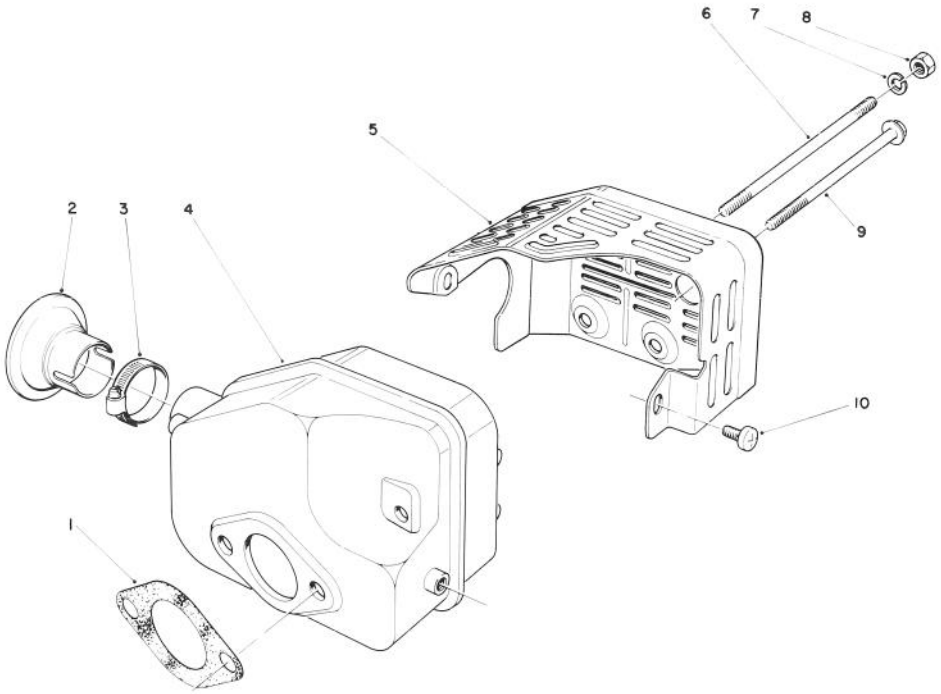

MUFFLER ASSEMBLY
(Model No. 47PG6 and 47PH7)

Ref. No.	Part No.	Description	No. Used
1	81-1080	Gasket — Muffler	1
2*	81-0200	Spark Arrester	1
3†		Clamp	1
4	81-1090	Muffler	1
5	81-2450	Cover — Muffler	1

Ref. No.	Part No.	Description	No. Used
6	81-1100	Bolt	2
7	81-1120	Washer — Lock	2
8	81-1110	Nut	2
9	81-1150	Bolt — Self Tapping	1
10	81-1140	Screw — Phillips Hd.	2

*Optional Equipment
†Obtain Locally