FORM NO. 3313-542

TORO®

MODEL NO. 20695-8000001 & Up

PARTS CATALOG

21" S.P. REAR BAGGER

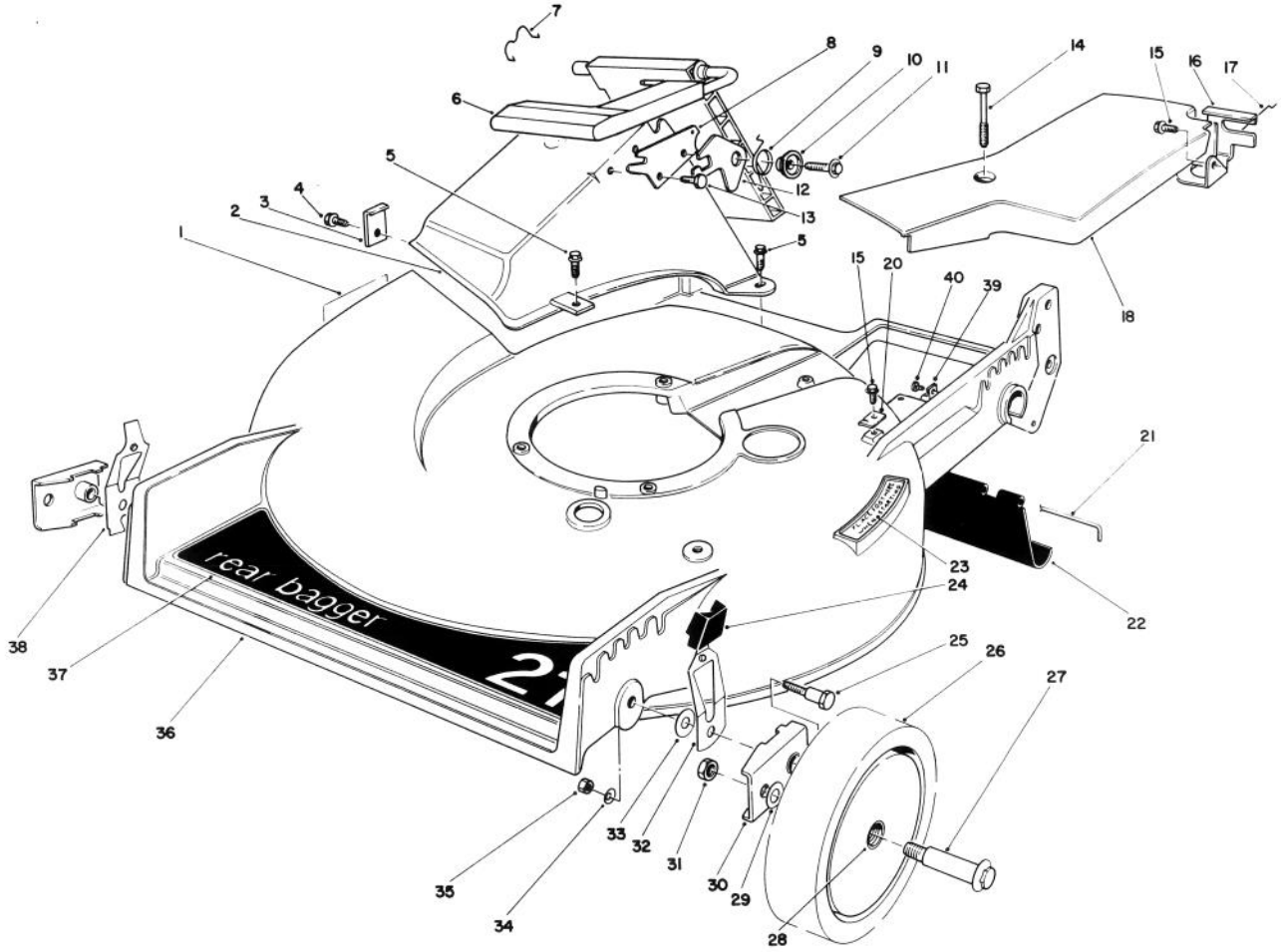

HOUSING ASSEMBLY

Ref. No.	Part No.	Description	No. Used
1	43-8480	Decal — Danger	1
2	46-3500	Tunnel — Discharge	1
3	47-6540	Clip — Tunnel	1
4	12-3270	Screw — Thread Forming, Hex Washer Hd.	1
5	46-6811	Screw — Thread Forming, Hex Washer Hd.	3
6	51-0200	Discharge Door Assembly	1
7	47-5840	Door — Retainer	1
8	23-1040	Plate — Latch	1
9	33-4860	Spring — Torsion	1
10	43-4840	Spacer — Latch	1
11	46-8091	Screw — Self Tapping, Hex Washer Hd.	1

Ref. No.	Part No.	Description	No. Used
12	42-4010	Latch — Safety	1
13	46-8090	Screw — Self Tapping, Hex Washer Hd.	1
14	37-7260	Capscrew — Special	2
15	32144-70	Screw — Thread Forming, Hex Washer Hd.	2
16	62-3940	Bracket — Traction Adjustment	1
17	46-7030	Retainer — Cable	1
18	52-7402	Cover — Belt	1
20	62-3720	Clamp — Cable	1
21	33-3208	Rod — Shield	1
22	44-0580	Shield — Trailing	1
23	46-7370	Decal — Step Pad	1
24	25-7740	Knob Arm	2

©The Toro Company — 1988

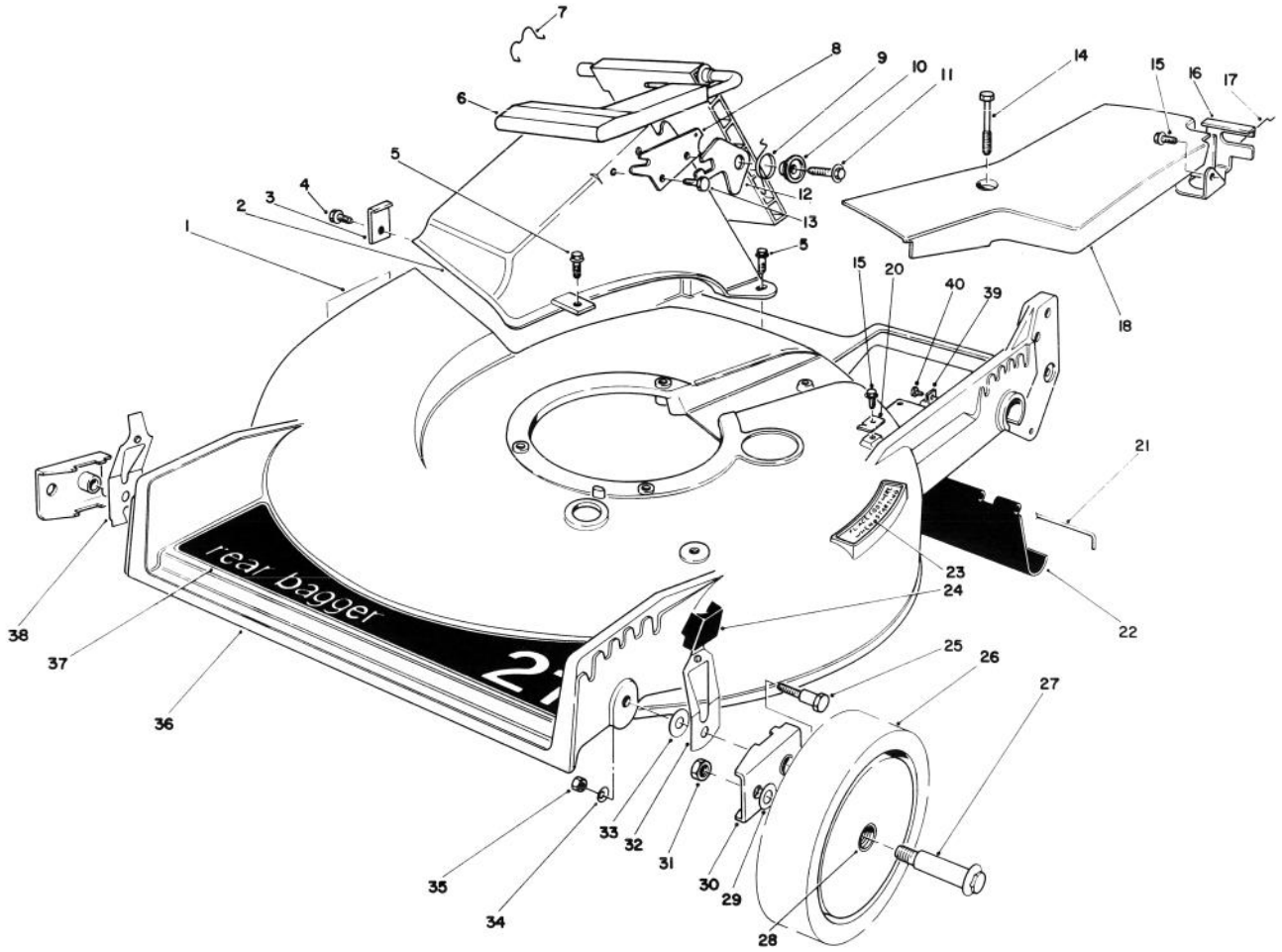

HOUSING ASSEMBLY (Continued)

Ref. No.	Part No.	Description	No. Used
25	44-5270	Screw — Pivot	2
26	11-9509	Wheel & Tire Assembly (Incl. Ref. #28)	2
27	27-6230	Wheel Bolt	2
28	27-6250	Bushing — Wheel	4
29	40-1940	Washer — Wheel Bolt	2
30	47-2940	Pivot Arm Assembly	2
31	52-3620	Nut — Lock	2
32	52-7480	Spring Arm Assembly (L.H.)	1

Ref. No.	Part No.	Description	No. Used
33	5-4460	Washer — Pivot	2
34	3290-456	Washer — Belleville	2
35	3296-29	Nut — Lock	2
36	11-4099	Housing (Incl. Ref. #1, 5 & 23)	1
37	44-0450	Decal — 21" Rear Bagger	1
38	52-7490	Spring Arm Assembly (R.H.)	1
39	2412-83	R-Clamp	1
40	12-5450	Screw — Self Tapping	1

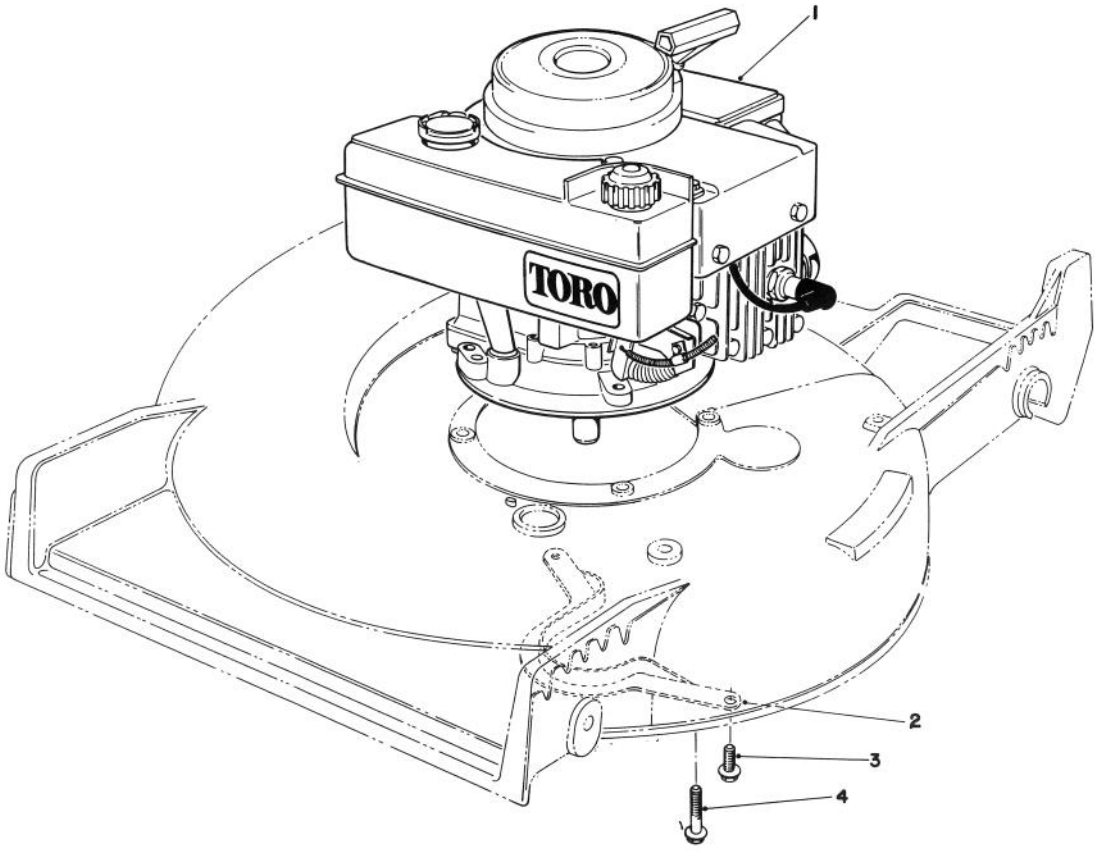

ENGINE ASSEMBLY

Ref. No.	Part No.	Description	No. Used
1		Engine	1
2	62-3780	Guide — Belt	1

Ref. No.	Part No.	Description	No. Used
3	49-2040	Screw — Thread Forming	2
4	11-0581	Screw — Thread Forming	3

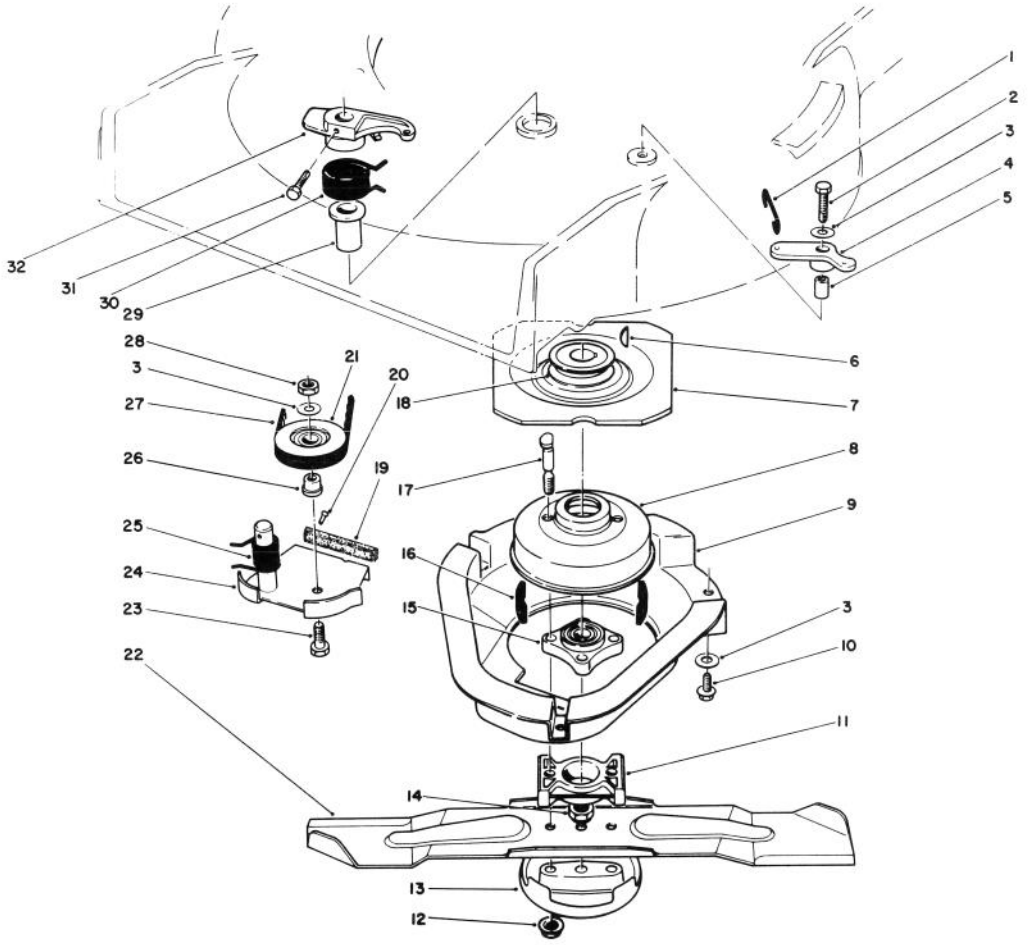

BLADE BRAKE CLUTCH ASSEMBLY

Ref. No.	Part No.	Description	No. Used
1	49-2810	Link — Control	1
2	32104-107	Screw — Self Tap Hex Hd.	1
3	3256-23	Washer — Plain	5
4	49-7960	Bell Crank	1
5	49-7950	Sleeve — Bell Crank	1
6	3257-3	Key Woodruff	1
7	56-6160	Flywheel	1
8	56-6170	Drum — Brake	1
9	46-5690	Shield	1
10	32144-70	Screw — Thread Forming Hex Washer Hd.	3
11	62-4280	Spacer — Blade	1
12	54-9190	Nut — Lock	2
13	42-0910	Cup — Anti Scalp	1
14	3296-33	Nut — Lock	1
15	42-6890	Hub Assembly	1
16	52-3480	Dampener — Vibration	2

Ref. No.	Part No.	Description	No. Used
17	42-3190	Bolt — Blade	2
18	62-7560	Pulley Driver	1
19		Pad — Brake	1
20	3295-23	Rivet — Semi Tubular	2
21	46-5650	Pulley Idler	1
22	42-1000	Blade 21"	1
23	322-16	Capscrew	1
24	49-7920	Brake Plate (Incl. Ref. #19 & 20)	1
25	46-5670	Spring — Torsion Lower	1
26	46-5630	Hub — Idler Pulley	1
27	42-0884	V-Belt	1
28	3296-47	Nut — Lock	1
29	46-6680	Bushing — Flanged	1
30	49-7970	Spring — Torsion Upper	1
31	32104-96	Screw — Self Tap Hex. Hd.	1
32	49-2820	Lever	1

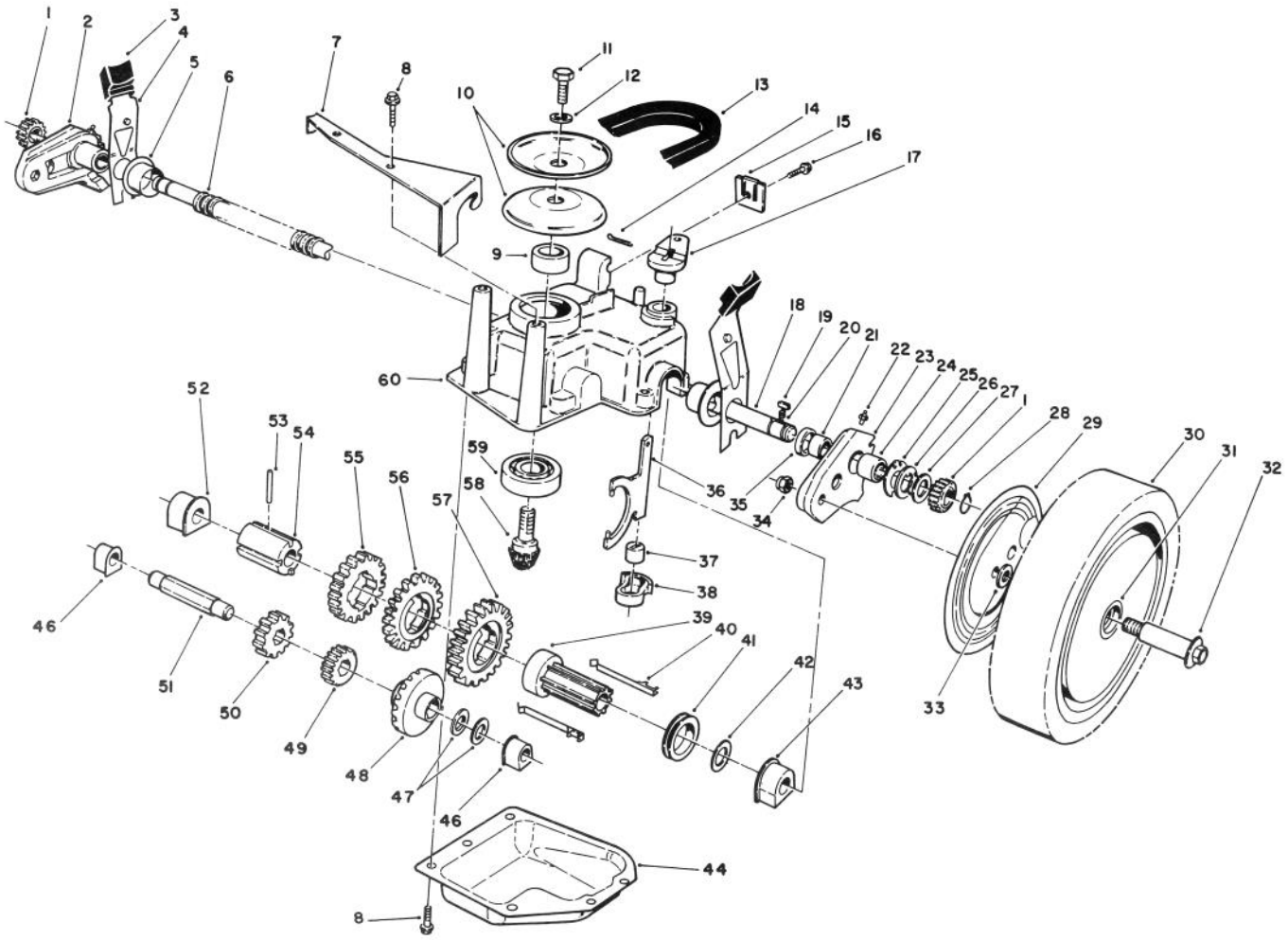

GEAR CASE ASSEMBLY
(used on units with Serial No. 8000001 thru 8049999)

Ref. No.	Part No.	Description	No. Used
1	39-9160	Pinion	2
2	49-7720	Pivot Arm Assembly — R.H. (Incl. Ref. #21, 22, 24 & 35)	1
3	25-7740	Knob — Arm	2
4	44-1010	Spring Arm Assembly	2
5	42-3520	End Cap	2
6	24-7922	Cover — Drive Shaft	1
7	62-4320	Bracket — Belt Guide	1
8	49-2040	Screw — Self Tapping	8
9	62-6660	Spacer	1
10	60-8840	Pulley — Half	2
11	3296-5	Locknut	1
12	3256-24	Washer — Flat	1
13	62-3900	V-Belt	1
14	3272-31	Pin — Cotter	1
15	46-5610	Cable Clamp	1
16	32144-70	Screw — Thread Forming	1
17	60-8820	Lever — Shift	1
18	12-6659	Shaft — Output	1
19	39-9680	Key — Rectangular	2
20	39-9650	Spring	2
21	47-2890	Bushing	2

Ref. No.	Part No.	Description	No. Used
22	302-56	Fitting — Grease	2
23	49-7710	Pivot Arm Assembly — L.H. (Incl. Ref. #21, 22, 24 & 35)	1
24	48-2060	Needle Bearing	2
25	49-7690	Washer — Thrust, Inner	2
26	49-7700	Washer — Thrust, Outer	2
27	62-3830	Washer — Thrust, Outer	2
28	32121-68	Retaining Ring	4
29	52-4860	Cover — Wheel	2
30	51-2741	Wheel — Tire & Gear Assy. (Incl. Ref. #31)	2
31	27-6250	Bushing — Wheel	4
32	27-6231	Wheel Bolt	2
33	40-1940	Washer — Wheel Bolt	4
34	52-3620	Nut — Lock	2
35	47-6730	Oil Seal	2
36	60-8870	Yoke — Shift	1
37	29-9570	Bushing — Yoke	1
38	60-8810	Retainer — Shift Fork	1
39	60-8780	Sleeve — Shift Key	1
40	60-8740	Key — Shift	2
41	60-8760	Collar — Shift	1

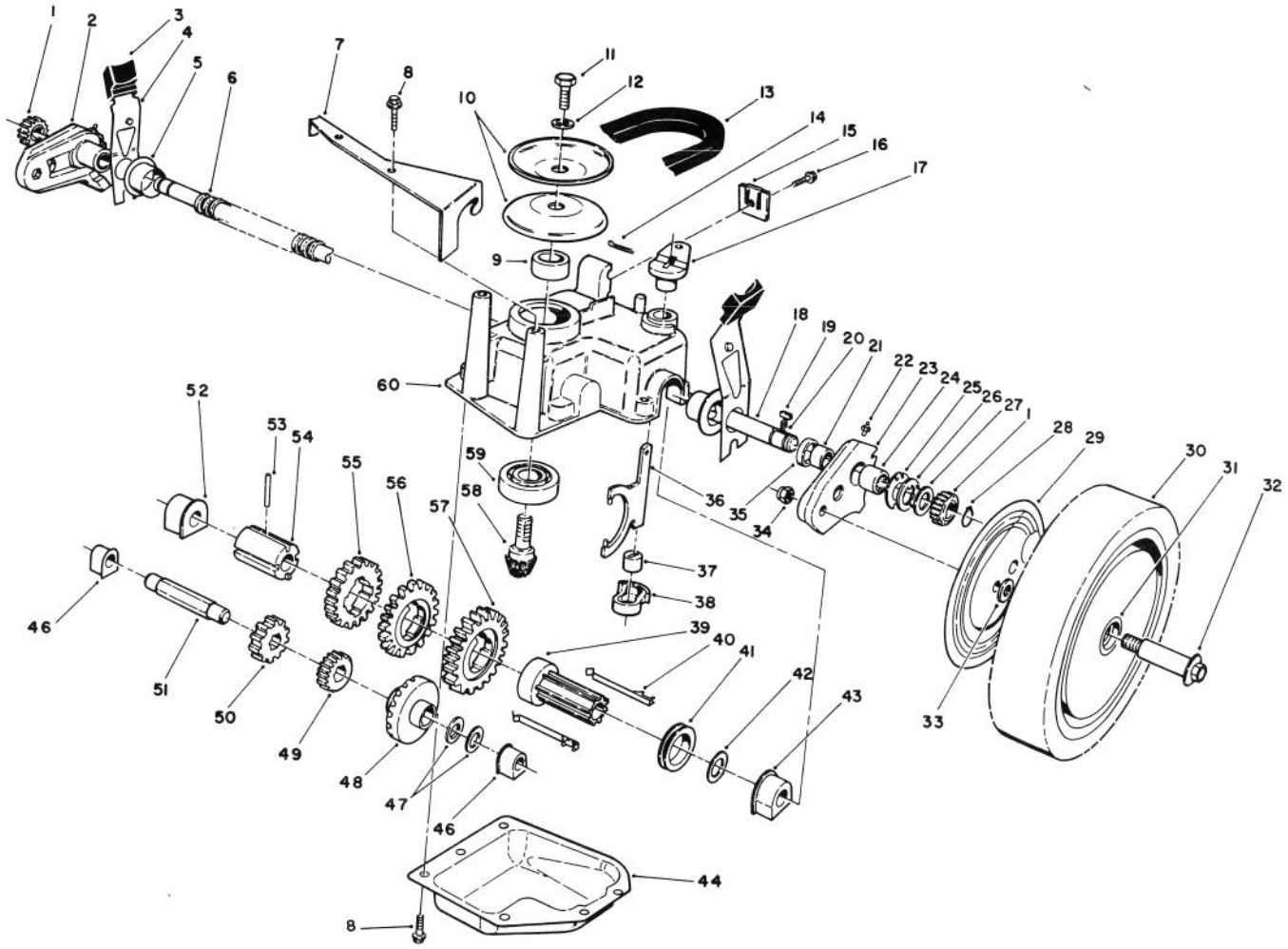

GEAR CASE ASSEMBLY
(used on units with Serial No. 8000001 thru 8049999) (Continued)

Ref. No.	Part No.	Description	No. Used
42	36-4780	Washer — Thrust	1
43	60-8770	Bushing — Output Shaft	1
44	60-8730	Cover — Gear Case	1
46	60-8750	Bushing — Int. Shaft	2
47	36-4791	Washer — Thrust	2
48	55-3760	Gear — Pinion 15 Tooth	1
49	55-3780	Gear — Pinion 20 Tooth	1
50	55-3800	Gear — Pinion 25 Tooth	1
51	60-8800	Shaft — Intermediate	1
52	60-8850	Bushing — Output Shaft	1
53	32121-120	Pin — Coil	1

Ref. No.	Part No.	Description	No. Used
54	60-8790	Sleeve Gear	1
55	55-3810	Gear — 39 Tooth 3rd Gear	1
56	55-3790	Gear — 44 Tooth 2nd Gear	1
57	55-3770	Gear — 49 Tooth 1st Gear	1
58	60-8890	Pinion — Bevel	1
59	38-7820	Bearing — Ball	1
60	60-8710	Gear Case — Upper	1
*	62-6670	Gear Case Assy. (used on units with serial no. 8000001 thru 8049999)	1

* Not Illustrated

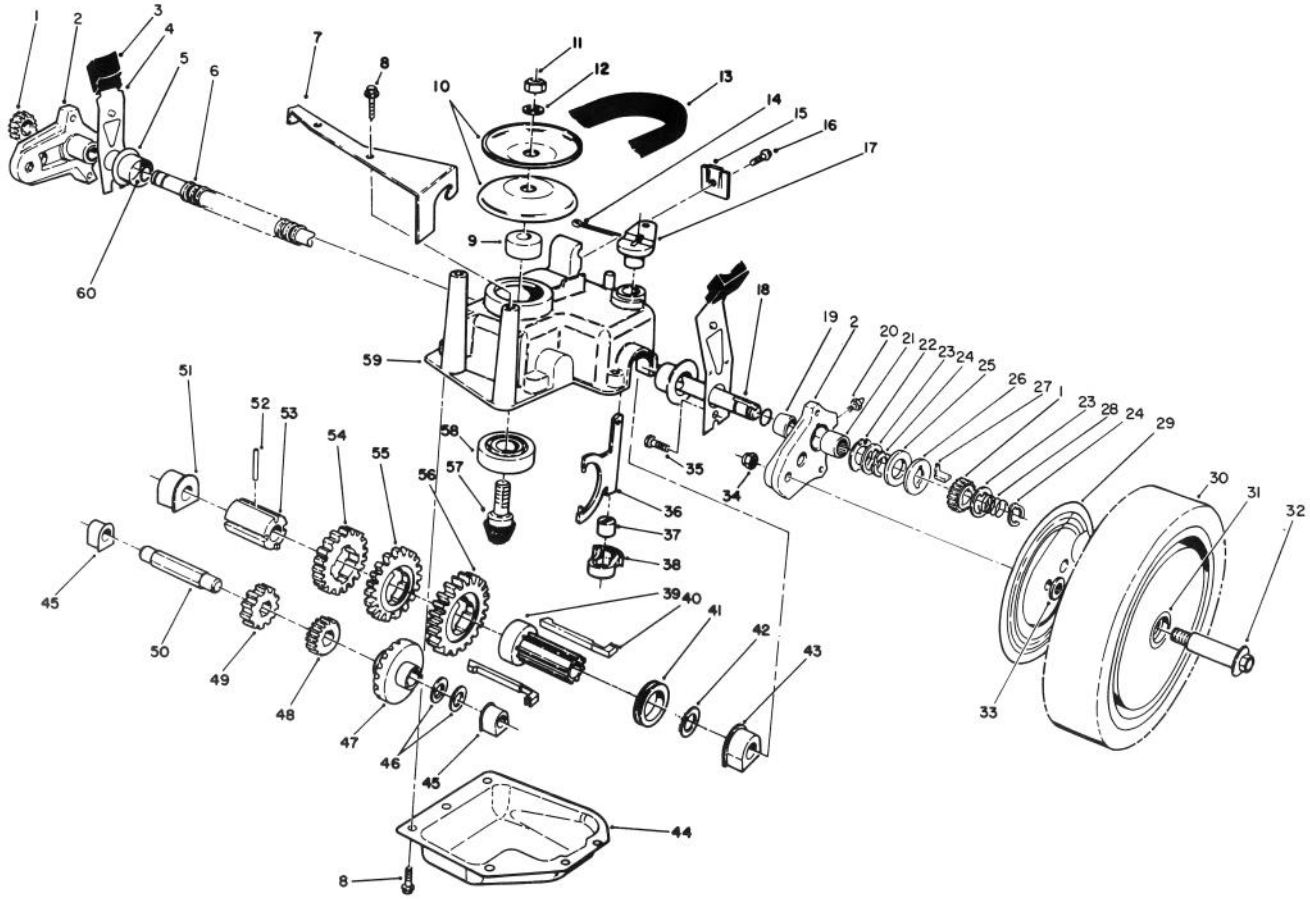

GEAR CASE ASSEMBLY
(used on units with Serial No. 8050000 & up)

Ref. No.	Part No.	Description	No. Used
1	65-4750	Pinion	2
2	63-8700	Pivot Arm Assembly (Incl. Ref. #19, 20, 21)	2
3	25-7740	Knob — Arm	2
4	63-8720	Spring Arm Assembly	2
5	42-3520	End Cap	2
6	24-7922	Cover — Drive Shaft	1
7	62-4320	Bracket — Belt Guide	1
8	49-2040	Screw — Self Tapping	8
9	62-6660	Spacer	1
10	60-8840	Pulley — Half	2
11	3296-5	Nut — Lock	1
12	3256-24	Washer — Flat	1
13	62-3900	V-Belt	1
14	3272-10	Pin — Cotter	1
15	46-5610	Cable Clamp	1
16	32144-70	Screw — Thread Forming	1
17	60-8820	Lever — Shift	1
18	65-4770	Shaft — Output	1
19	47-2890	Bushing	2
20	302-56	Fitting — Grease	2
21	48-2060	Needle Bearing	2
22	65-4730	Thrust Washer	2
23	65-4740	Thrust Washer	2
24	65-2720	Retaining Ring	4

Ref. No.	Part No.	Description	No. Used
25	65-4710	Friction Ring	2
26	65-4760	Washer — Clutch	2
27	66-6050	Key — Rocker L.H.	1
*	66-6040	Key — Rocker R.H.	1
28	65-4720	Spring	2
29	65-5270	Cover — Wheel	2
30	11-9519	Wheel — Tire & Gear Assy. (Incl. Ref. #31)	2
31	27-6250	Bushing — Wheel	4
32	27-6231	Wheel Bolt	2
33	40-1940	Washer — Wheel Bolt	4
34	52-3620	Nut — Lock	2
35	32144-85	Screw	2
36	60-8870	Yoke — Shift	1
37	29-9570	Bushing — Yoke	1
38	60-8810	Retainer — Shift Fork	1
39	60-8780	Sleeve — Shift Key	1
40	60-8740	Key — Shift	2
41	60-8760	Collar — Shift	1
42	36-4780	Washer — Thrust	1
43	60-8770	Bushing — Output Shaft	1
44	60-8730	Cover — Gear Case	1
45	60-8750	Bushing — Int. Shaft	2
46	36-4791	Washer — Thrust	2
47	55-3760	Gear — Pinion 15 Tooth	1

* Not Illustrated

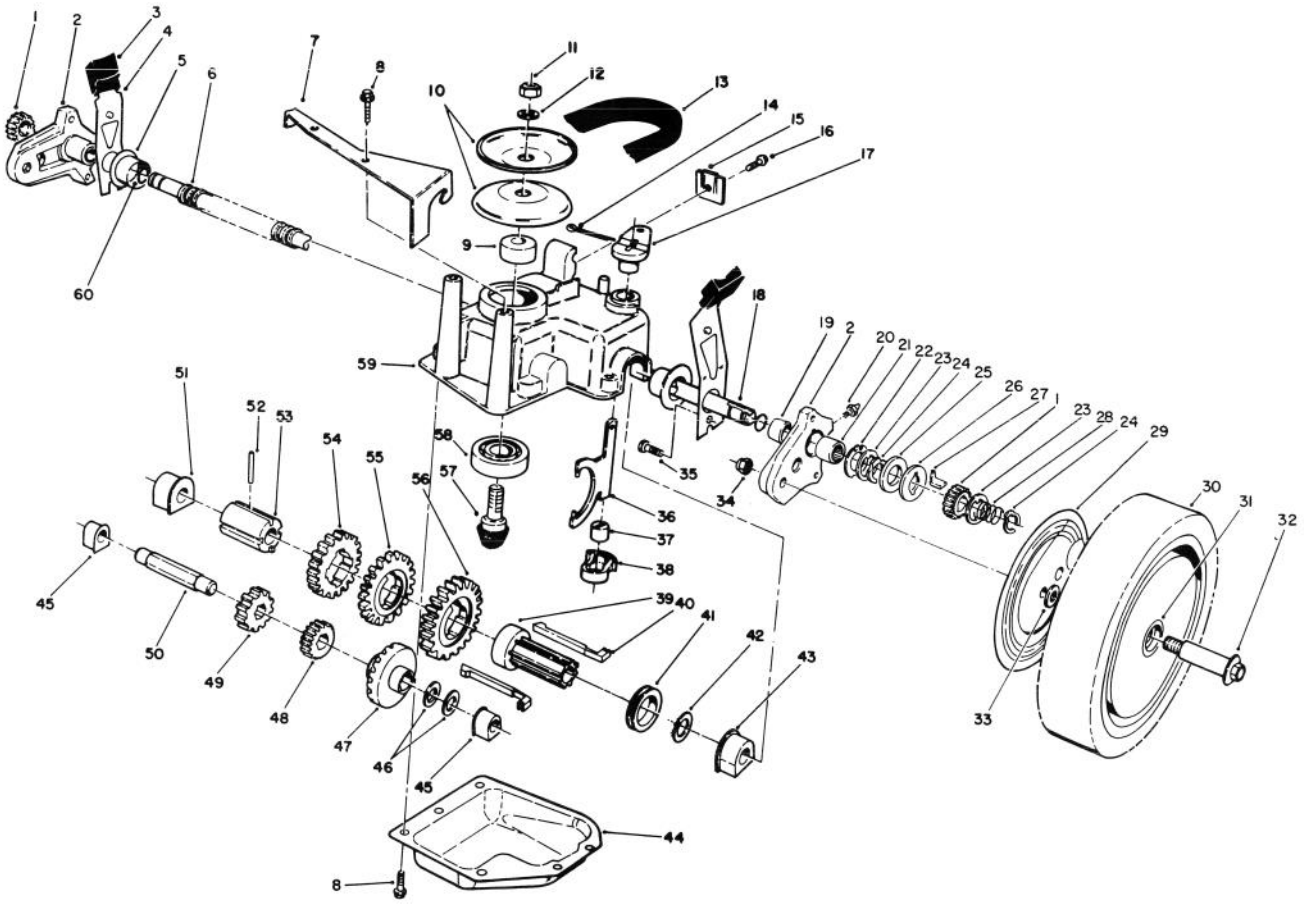

GEAR CASE ASSEMBLY
(used on units with Serial No. 8050000 & up) (Continued)

Ref. No.	Part No.	Description	No. Used
48	55-3780	Gear — Pinion 20 Tooth	1
49	55-3800	Gear — Pinion	1
50	60-8800	Shaft — Intermediate	1
51	60-8850	Bushing — Output Shaft	1
52	32121-120	Pin — Coil	1
53	60-8790	Sleeve Gear	1
54	55-3810	Gear — 39 Tooth 3rd Gear	1
55	55-3790	Gear — 44 Tooth 2nd Gear	1

Ref. No.	Part No.	Description	No. Used
56	55-3770	Gear — 49 Tooth 1st Gear	1
57	60-8890	Pinion — Bevel	1
58	38-7820	Bearing — Ball	1
59	60-8710	Gear Case — Upper	1
60	237-153	O-Ring	1
*	62-6672	Gear Case Assy. (used on units with serial no. 8050000 & up)	1

* Not Illustrated

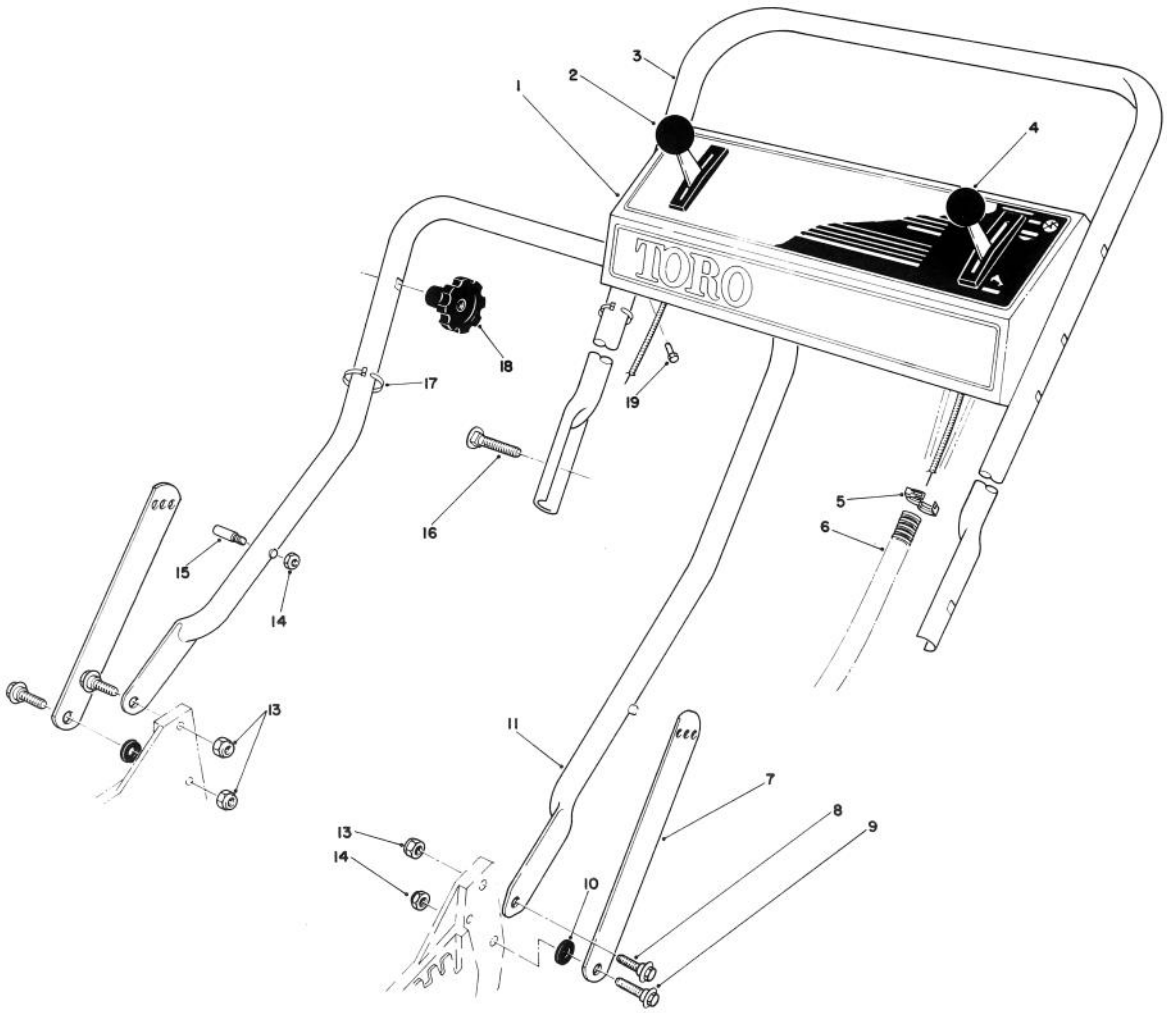

HANDLE ASSEMBLY

Ref. No.	Part No.	Description	No. Used
1	61-4320	Panel — Control	1
2	46-5430	Control — Ground Speed (Bend Type #1) (Sheath Lg. 42-1/4 inches) (Wire Lg. 2-3/8 inches)	1
3	49-4234	Handle — Upper	1
4	46-5447	Control — Throttle (Sheath Lg. 55-1/2 inches) (Wire Lg. 2-1/8 inches)	1
5	2412-50	Clip — Convoluted Tubing	4
6	46-6440	Cover — Control Cables	1
7	43-1370	Latch — Handle	2

Ref. No.	Part No.	Description	No. Used
8	27-7211	Screw — Shoulder	2
9	27-7210	Screw — Shoulder	2
10	3-3287	Spacer — Handle Latch	2
11	43-1361	Lower Handle Assembly	1
13	3296-29	Nut — Lock	3
14	3296-47	Nut — Lock	1
15†	49-2750	Pin — Handle	2
16	17-9421	Screw — Handle	2
17	3290-378	Cable Tie	2
18	19-4050	Knob — Handle Release	2
19	32104-76	Screw — Self Tapping Slotted	4

† Service Replacement Parts

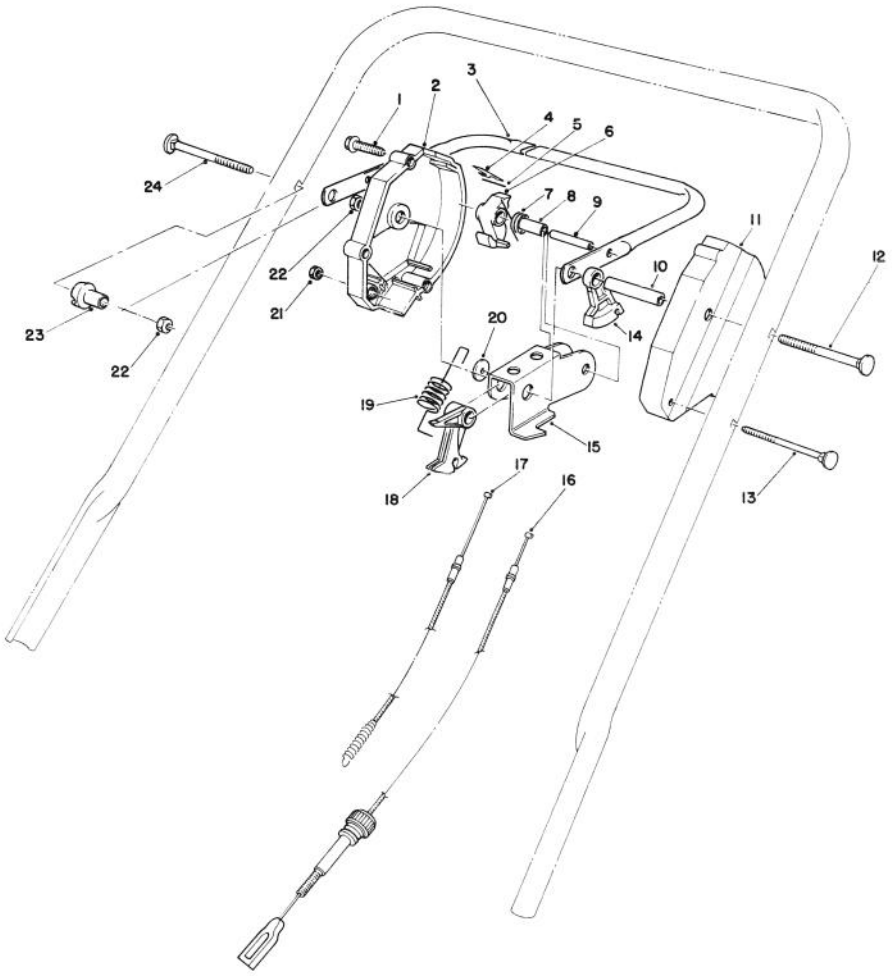

TRACTION CONTROL ASSEMBLY

Ref. No.	Part No.	Description	No. Used
1	46-7040	Screw — Thread Forming Hex Washer Hd.	3
2	12-3429	Housing — Control R.H. (Incl. Ref. #4 & 5)	1
3	62-3810	Control Bar Assembly	1
4	52-7410	Spring — Leaf	1
5	57-6290	Pin — Insert	1
6	46-5530	Hook — Control	1
7	46-5510	Spring — Torsion	1
8	46-5550	Bushing — P.M.	1
9	32121-9	Pin — Coil	1
10	46-5590	Spacer	1
11	46-5460	Housing — Control L.H.	1

Ref. No.	Part No.	Description	No. Used
12	17-9422	Screw — Handle	1
13	46-6431	Screw — Handle	1
14	46-5520	Lever — Traction	1
15	62-3710	Rocker	1
16	46-5480	Cable — Traction	1
17	62-3770	Cable — Clutch	1
18	46-5540	Lever — Cable	1
19	65-5990	Spring — Detent	1
20	46-5600	Washer — Nylon	1
21	3296-8	Locknut	1
22	3296-58	Locknut	2
23	49-1630	Support — Spacer	1
24	17-9421	Screw — Handle	1

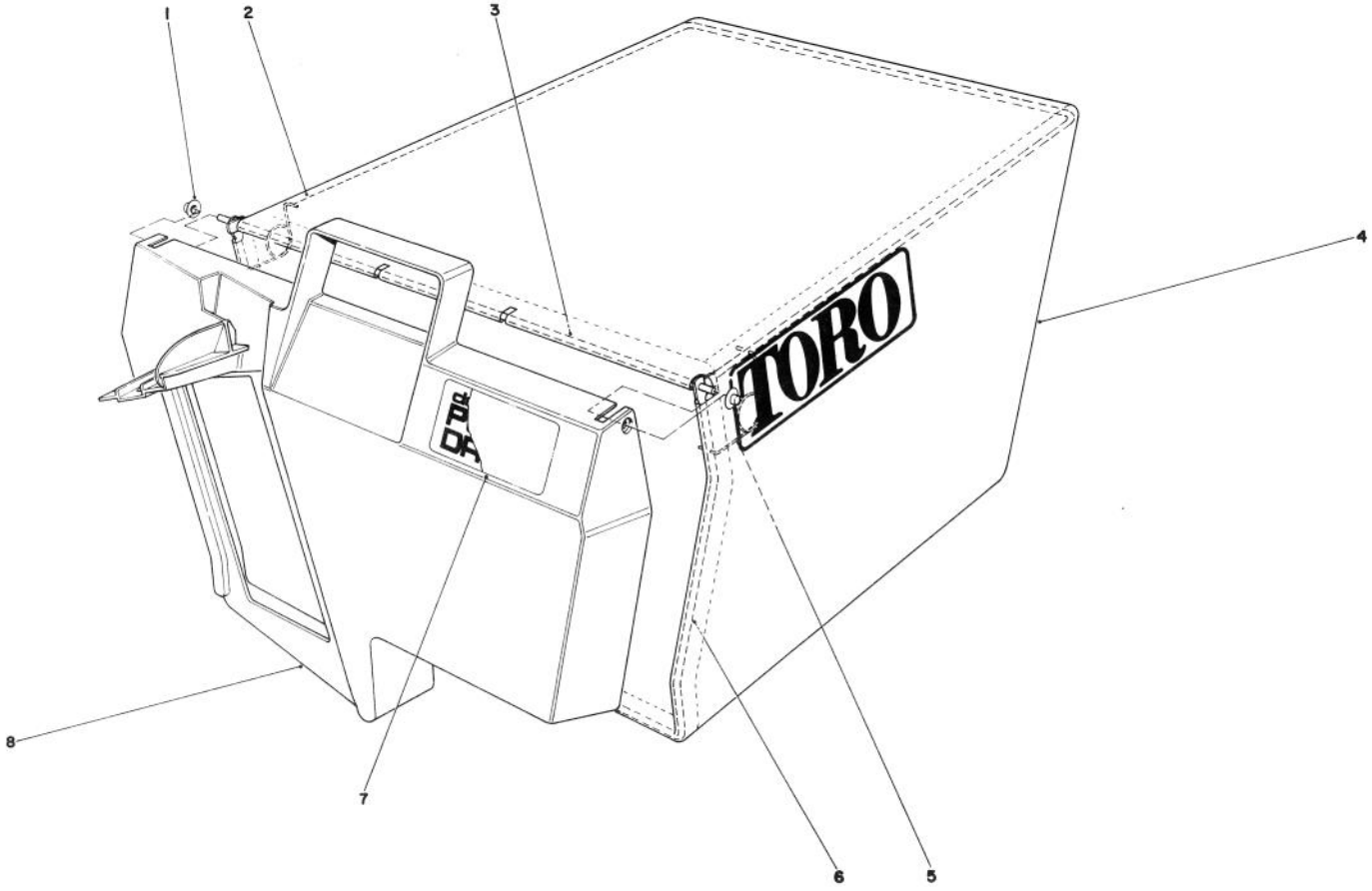

GRASS BAG ASSEMBLY NO. 11-0189

Ref. No.	Part No.	Description	No. Used
1	3290-422	Nut — Push	2
2	42-4030	Bag Frame — Upper	1
3	33-4820	Hinge — Bag Door	1
4	8-2759	Grass Bag	1

Ref. No.	Part No.	Description	No. Used
5	36-6910	Spring	2
6	42-4020	Frame — Bag	1
7	40-2240	Decal — Bag Door	1
8	37-1392	Door — Grass Bag	1

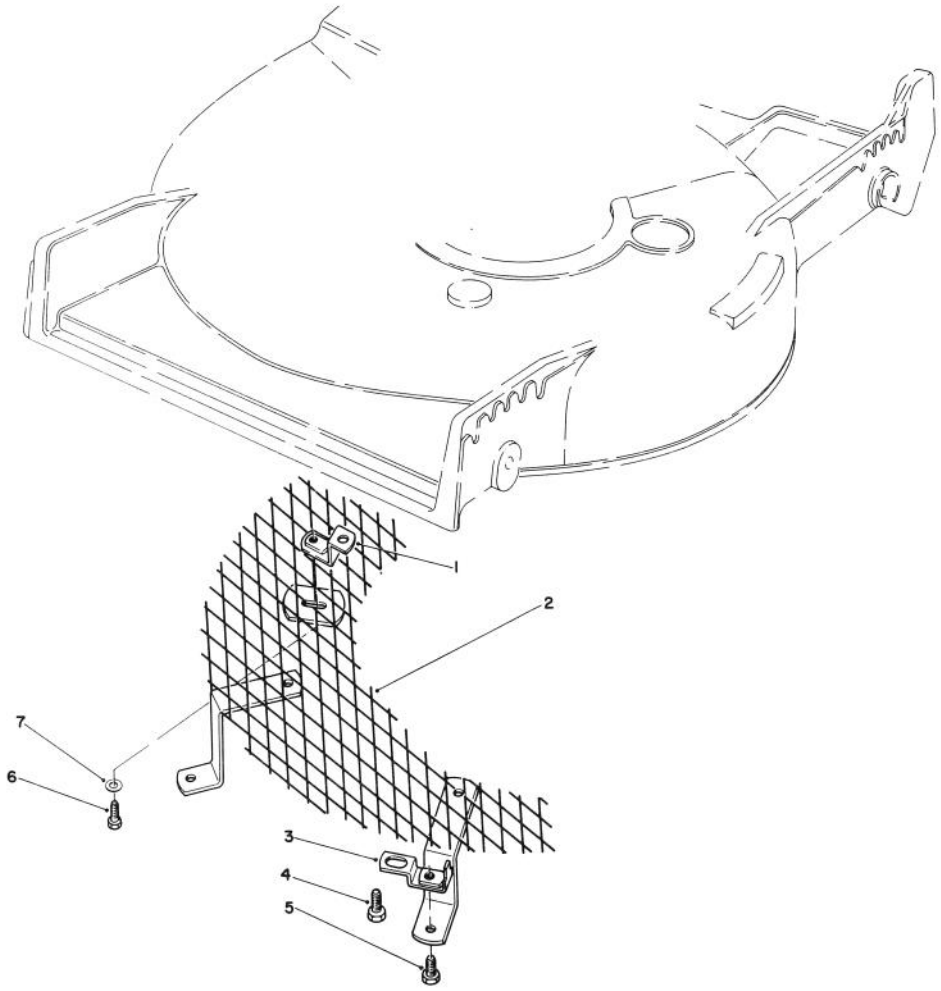

LEAF SHREDDER KIT MODEL NO. 59157 (Optional)

Ref. No.	Part No.	Description	No. Used
1	47-6260	Bracket	1
2	47-6230	Screen	1
3	46-4880	Mounting Bracket	2
4	32144-11	Screw — Self Tapping	3

Ref. No.	Part No.	Description	No. Used
5	321-3	Capscrew — Hex Hd.	2
6	321-5	Capscrew — Hex Hd.	1
7	3256-1	Washer	1

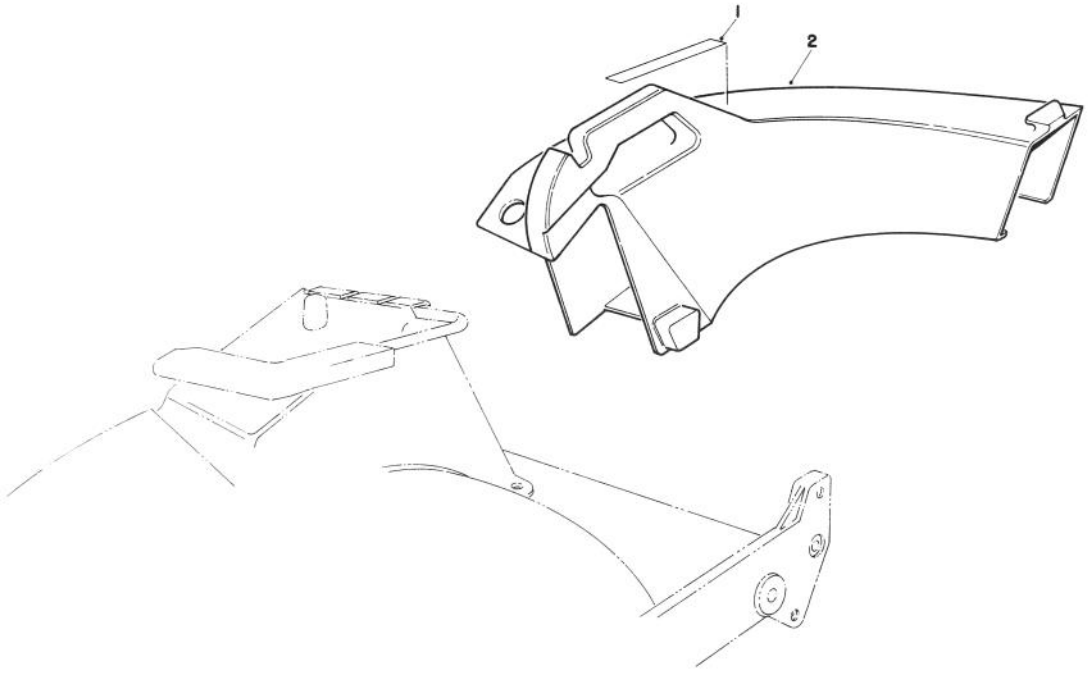

SIDE DISCHARGE CHUTE MODEL NO. 59168 (Optional)

Ref. No.	Part No.	Description	No. Used
1	39-9120	Decal — Caution	1

Ref. No.	Part No.	Description	No. Used
2	13-2239	Chute — Discharge (Incl. Ref. #1)	1

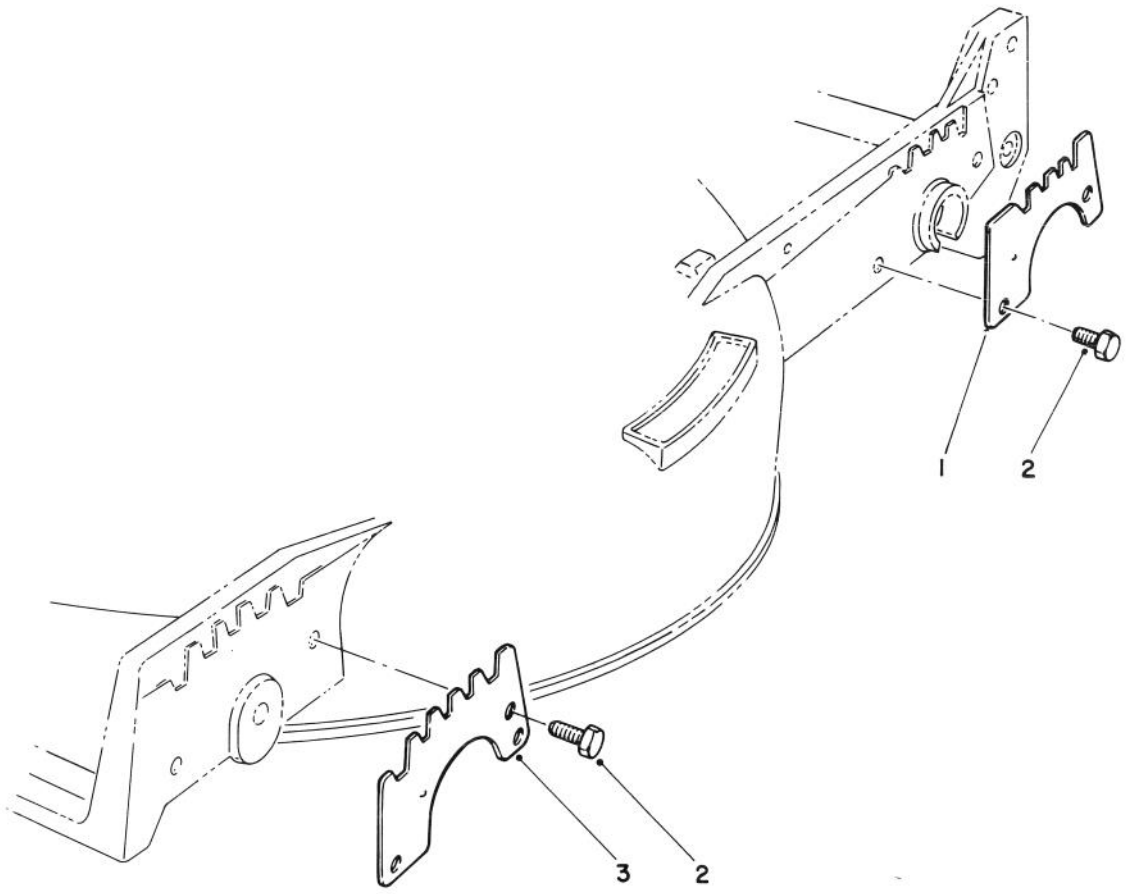

WEAR PLATE KIT MODEL NO. 49-4080 (Optional)

Ref. No.	Part No.	Description	No. Used
1	49-4070	Plate — Wear, Rear	2
2	32104-17	Screw — Thread Forming	8

Ref. No.	Part No.	Description	No. Used
3	43-5050	Plate — Wear, Front	2

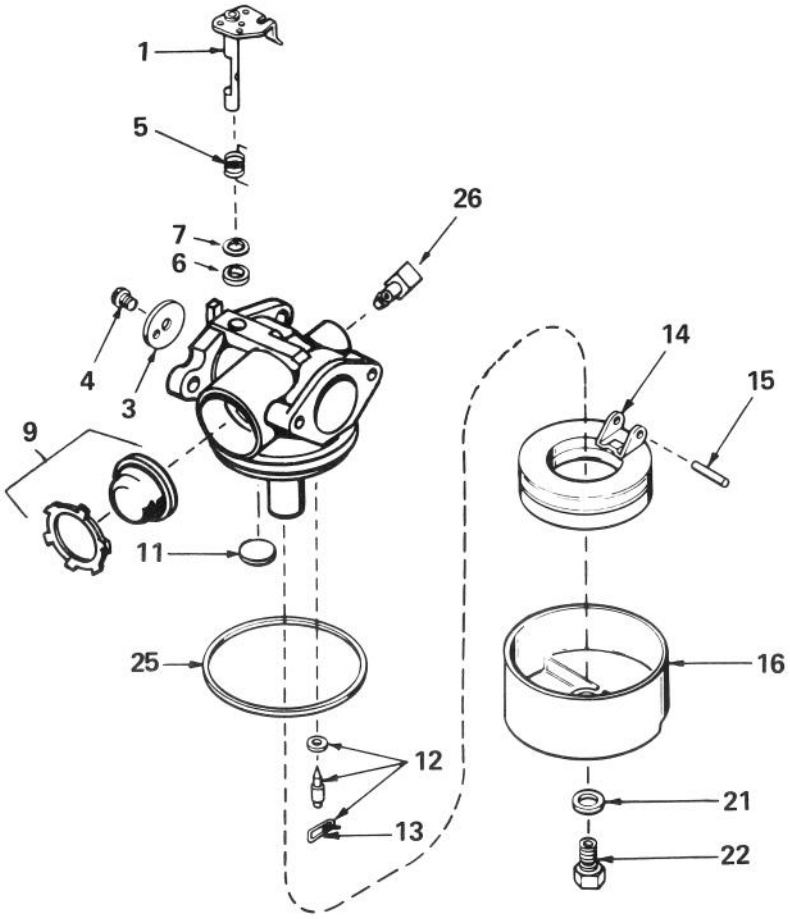

CARBURETOR NO. 632098

Ref. No.	Part No.	Description	No. Used
1	631615	Shaft & Lever Assy. — Throttle	1
3	631616	Shutter — Throttle	1
4	650506	Screw — Throttle Shutter	1
5	631767	Spring — Throttle Return	1
6	631971	Seal — Dust	1
7	631184	Washer — Flat	1
9	632047	Primer Assembly	1
11	631027	Plug — Welch	1
12	631021	Inlet Needle — Seat & Clip Assy. (Incl. Ref. #13)	1

Ref. No.	Part No.	Description	No. Used
13	631022	Clip — Inlet Needle	1
14	632019	Float — Carburetor	1
15	631024	Shaft — Float	1
16	631700	Bowl — Float	1
21	631334	Gasket — Bowl-To-Body	1
22	631937	Nut — Float Bowl	1
25	631028	Gasket — Bowl-To-Body	1
26	631807	Fitting — Fuel Inlet	1

ENGINE TECUMSEH MODEL NO. TVS100-44013B

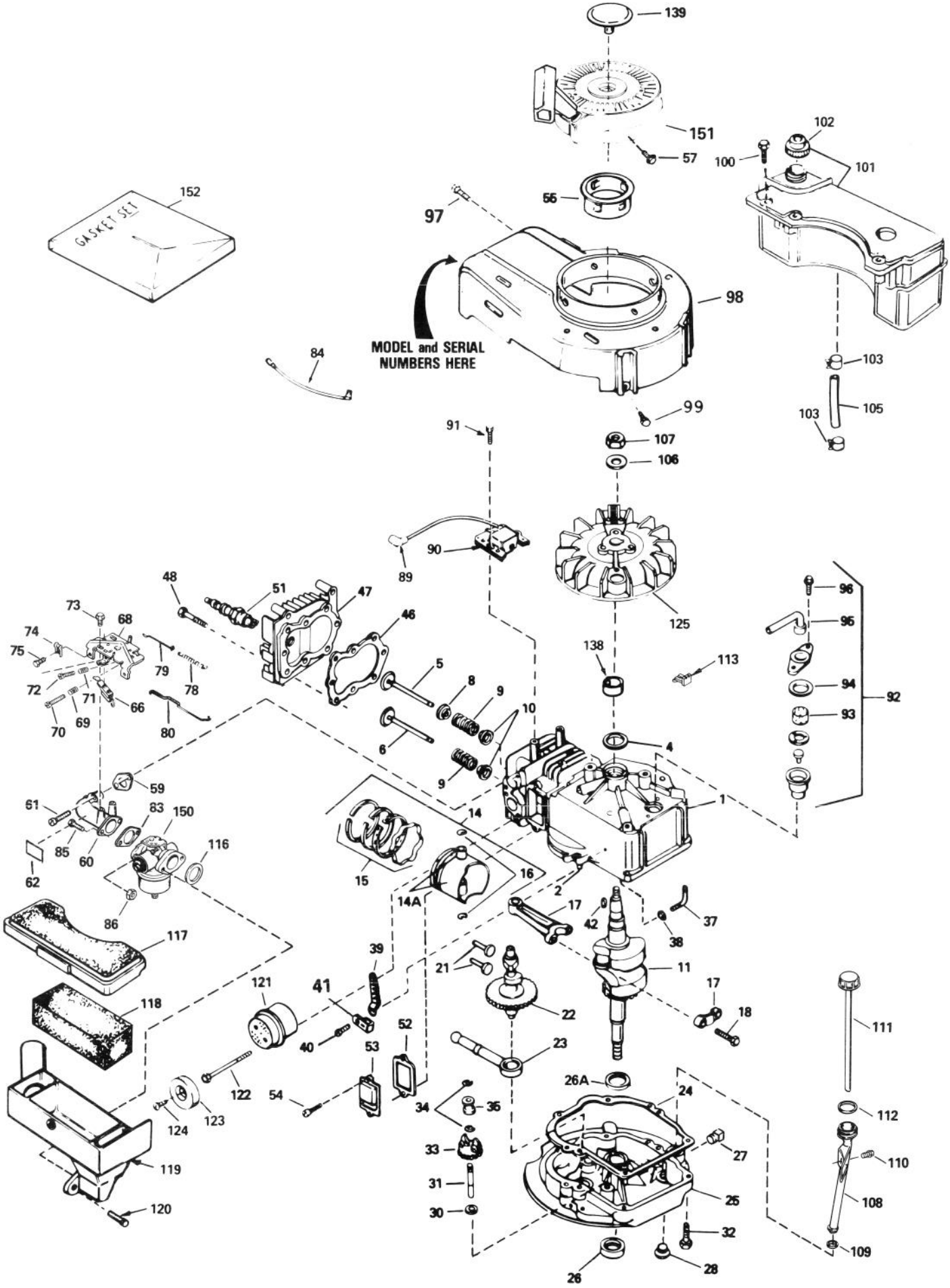

ENGINE TECUMSEH MODEL NO. TVS100-44013B

Ref. No.	Part No.	Description	No. Used
1	35010	Cylinder Assembly (Incl. Ref. #2 & 4)	1
2	26727	Pin — Dowel	2
4	32600	Seal — Oil	1
5	29314B	Valve — Intake (Std.) (Incl. Ref. #10)	1
5	29315C	Valve — Intake (1/32" oversize) (Incl. Ref. #10)	1
6	29313C	Valve — Exhaust (Std.) (Incl. Ref. #10)	1
6	29315C	Valve — Exhaust (1/32" oversize) (Incl. Ref. #10)	1
8	35390	Seal Assembly — Intake Valve	1
9	31672	Spring — Valve	2
10	31673	Cap — Lower Valve Spring	2
11	35483	Crankshaft	1
14	35544	Piston — Pin & Ring Assy. (Std.) (Incl. Ref. #14A, 15 & 16)	1
14	35545	Piston — Pin & Ring Assembly (.010 oversize) (Incl. Ref. #14A, 15 & 16)	1
14	35546	Piston — Pin & Ring Assembly (.020 oversize) (Incl. Ref. #14A, 15 & 16)	1
14A	35541	Piston & Pin Assembly (Std.) (Incl. Ref. #16)	1
14A	35542	Piston & Pin Assembly (.010 oversize) (Incl. Ref. #16)	1
14A	35543	Piston & Pin Assembly (.020 oversize) (Incl. Ref. #16)	1
15	35547	Ring Set — Piston (Std.)	1
15	35548	Ring Set — Piston (.010 oversize)	1
15	35549	Ring Set — Piston (.020 oversize)	1
16	20381	Ring — Piston Pin Retaining	2
17	30963B	Rod Assembly — Connecting (Incl. Ref. #18)	1
18	32610A	Screw — Connecting Rod	2
21	27241	Lifter — Valve	2
22	33553	Camshaft (Mechanical Compression Release)	1
23	29914	Pump Assembly — Oil	1
24	*35261	Gasket — Mounting Flange	1
25	34311B	Flange Assembly — Mounting (Incl. Ref. #26, 27, 28 & 31)	1
26	27897	Seal — Oil	1
26A	32323	Washer — Thrust	1
27	9556	Plug — Pipe	1
28	27244	Plug — Oil Drain	1
30	30590A	Washer — Flat	1
31	30574	Shaft — Mechanical Governor	1
32	650488	Screw — Hex Hd.	6
33	30591	Gear Assembly — Governor (Incl. Ref. #30)	1

Ref. No.	Part No.	Description	No. Used
34	29193	Ring — Retaining	2
35	30588A	Spool — Governor	1
37	30589	Rod — Governor (Incl. Ref. #38)	1
38	28277	Washer — Flat	1
39	31383A	Lever — Governor	1
40	650548	Screw — Hex Washer Hd.	1
41	31335	Clamp — Governor Lever	1
42	611004	Key — Flywheel (Solid State)	1
46	*33015	Gasket — Cylinder Head	1
47	34342	Head — Cylinder	1
48	6021A	Screw — Hex Flange Hd.	8
51	35395	Plug — Spark (Champion RJ-19LM)	1
52	*27234	Gasket — Breather	1
53	32755	Cover — Valve Spring	1
54	650128	Screw — Fil. Hd.	2
55	35000	Hub — Starter	1
57	650884	Screw — Hex Washer Hd.	4
59	*34690	Gasket — Intake Pipe	1
60	31384A	Pipe — Intake (Incl. Ref. #59)	1
61	650451	Screw — Hex Hd.	2
62	34144	Decal — Primer	1
66	610973	Terminal Assembly1	
68	33131A	Control Assy. — Remote Speed (Incl. Ref. #66 & 69 thru 72)	1
69	33802	Spring — Compression	1
70	650777	Screw — Fil. Hd.	1
71	31342	Spring — Compression	1
72	650549	Screw — Fil. Hd.	1
73	30200	Screw — Hex Washer Hd. Self-Tap.	2
74	27793	Clip — Conduit	1
75	28942	Screw — Hex Washer Hd.	1
78	31361	Spring — Governor	1
79	34337	Link — Governor Spring	1
80	34336	Link — Governor-to-Throttle	1
83	*26756	Gasket — Carburetor	1
84	34231	Wire — Ground	1
85	6201	Screw — Hex Hd.	2
86	29752	Nut & Lockwasher	2
89	610118	Cover — Spark Plug	1
90	34443A	Solid State Assembly	1
91	650814	Screw — Hex Hd.	2
92	34214A	Breather Assembly (Incl. Ref. #93 thru 96)	1
93	33734	Element — Breather	1
94	*33735	Gasket — Breather	1
95	33886	Tube — Breather	1
96	30200	Screw — Hex Washer Hd. Self-Tap	2
97	30200	Screw — Hex Washer Hd. Self-Tap	2
98	35484	Housing — Blower	1
99	650831	Screw — Hex Washer Hd. Power Lok Thread	2

* Indicates parts included in Gasket Set, Ref. #152.

ENGINE TECUMSEH MODEL NO. TVS100-44013B (Continued)

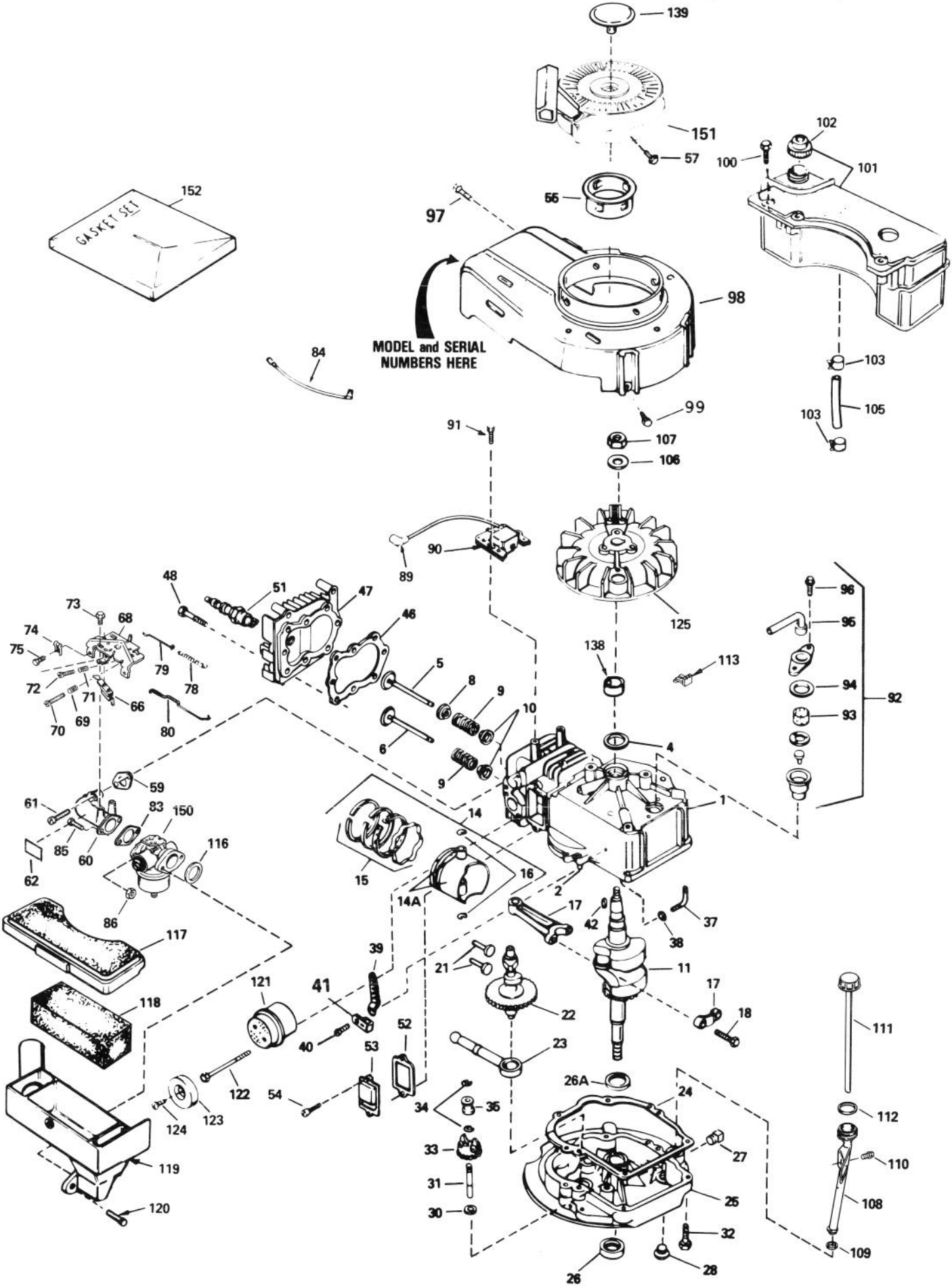

ENGINE TECUMSEH MODEL NO. TVS100-44013B (Continued)

Ref. No.	Part No.	Description	No. Used
100	28763	Screw — Hex Washer Hd. Shakeproof	3
101	34476	Tank Assembly — Fuel (Incl. Ref. #102 & 103))	1
102	33032	Cap — Fuel Tank	1
103	26460	Clamp — Fuel Line	2
105	30705	Line — Fuel	1
106	650815	Washer — Belleville	1
107	650816	Nut — Flywheel	1
108	35577	Tube — Oil Fill	1
109	34265	Gasket — Oil Fill Tube	1
110	650562	Screw — Hex Washer Hd. Shakeproof	1
111	35578	Dipstick — Oil	1
112	35499	"O" Ring	1
113	29443	Clip — Spring	1
116	*34338	Gasket — Air Cleaner	1
117	34341A	Cover — Air Cleaner	1
118	34340	Element — Air Cleaner	1
119	34858	Body — Air Cleaner	1
120	650806	Screw — Hex Washer Hd. Shoulder	2
121	27181B	Muffler (Incl. Ref. #122)	1
122	650795	Screw — Hex Hd.	2
123	32431	Cover — Muffler	1
124	650760	Screw — Pan Hd. Taptite	1
125	611046A	Flywheel	1
138	34080	Spacer — Flywheel Key	1
139	35392	Plug — Starter	1
150	632098	Carburetor (Inc. Ref. #83)	1
151	590635	Starter — Rewind	1
152	33238C	Gasket Set (Incl. Items Marked *)	1

* Indicates parts included in Gasket Set, Ref. #152.

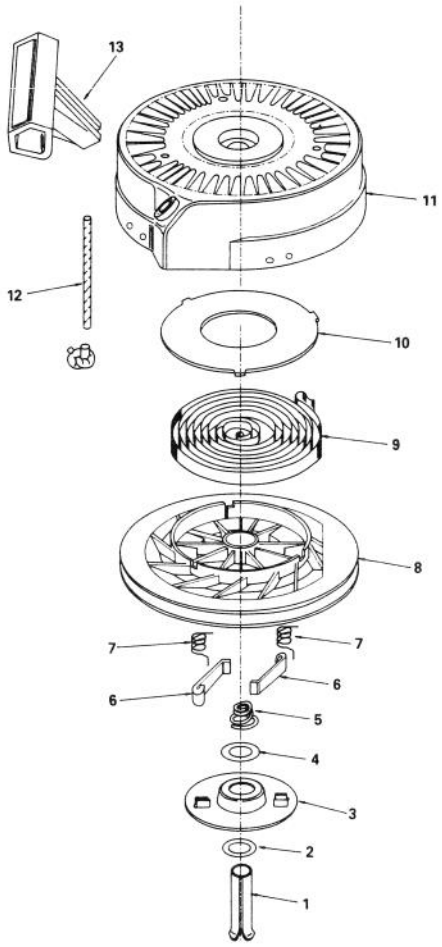

REWIND STARTER NO. 590635

Ref. No.	Part No.	Description	No. Used
1	590599	Pin — Spring	1
2	590600	Washer	1
3	590615	Retainer	1
4	590601	Washer	1
5	590598	Spring — Brake	1
6	590616	Dog — Starter	2
7	590617	Spring — Dog	2

Ref. No.	Part No.	Description	No. Used
8	590618	Pulley	1
9	590619	Spring — Rewind	1
10	590620	Cover — Spring	1
11	590622	Housing Assembly — Starter	1
12	590535	Rope — Starter (Length 62" & 9/64" dia.)	1
13	590452	Handle — Starter	1