FORM NO. 3313-543

TORO®

MODEL NO. 20526-8000001 & Up

PARTS CATALOG

21" H.P. REAR BAGGER

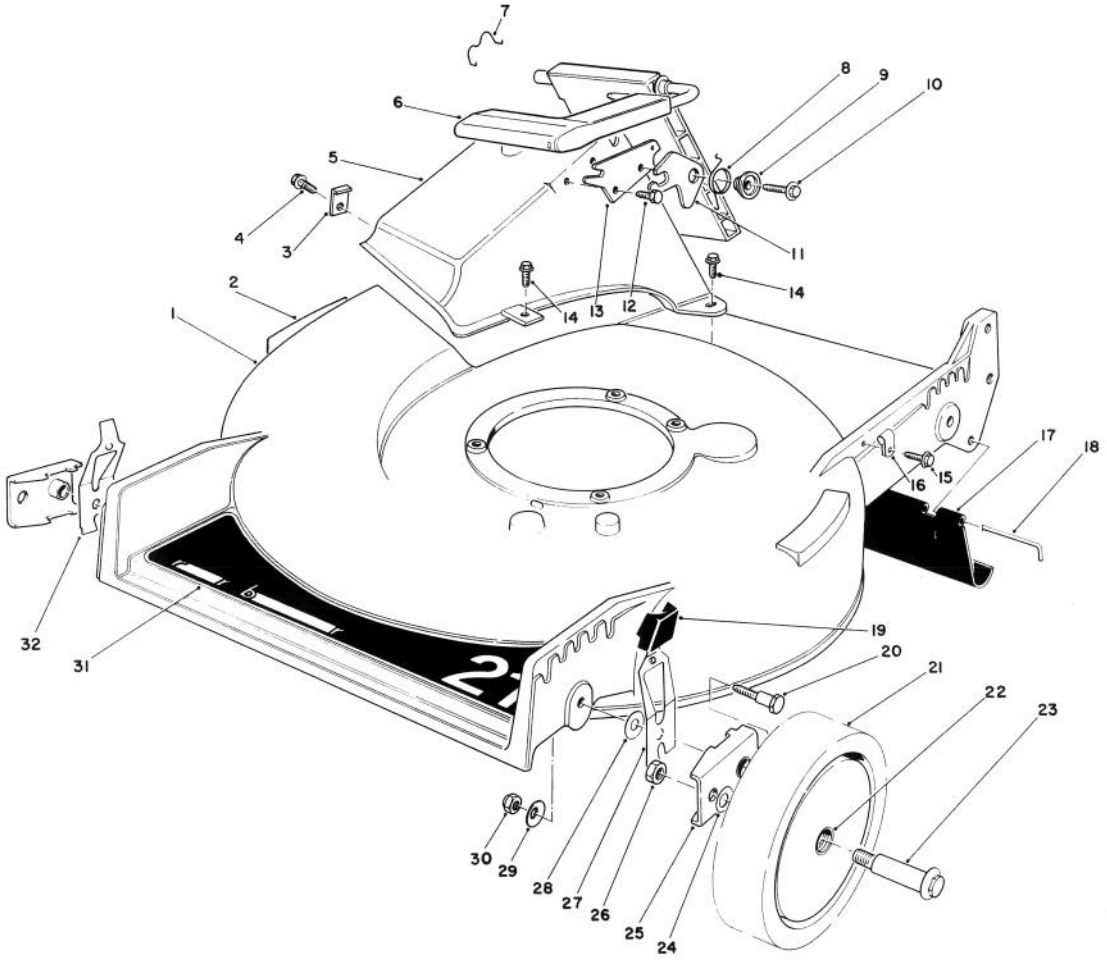

HOUSING ASSEMBLY

Ref. No.	Part No.	Description	No. Used
1	11-4069	Housing	1
2	39-5770	Decal — Danger	1
3	47-6540	Clip — Tunnel	1
4	12-3270	Screw — Thread Forming, Hex Washer Hd.	1
5	46-3500	Tunnel — Discharge	1
6	51-0200	Discharge Door Assembly	1
7	47-5840	Retainer — Door	1
8	33-4860	Spring — Torsion	1
9	43-4840	Spacer — Door Latch	1
10	46-8091	Screw — Self Tapping	1
11	42-4010	Latch — Door	1
12	46-8090	Screw — Self Tapping	1
13	23-1040	Plate — Latch	1
14	46-6811	Capscrew — Hex Hd.	3
15	12-5450	Screw — Self Tapping	1
16	2412-83	Clamp	1

Ref. No.	Part No.	Description	No. Used
17	44-0580	Rear Shield	1
18	33-3208	Rod — Shield	1
19	25-7740	Knob — Arm	4
20	44-5270	Screw — Pivot	4
21	11-9509	Wheel & Tire Assembly (Incl. Ref. #22)	4
22	27-6250	Bushing	8
23	27-6230	Wheel Bolt	4
24	40-1940	Washer — Wheel Bolt	4
25	47-2940	Pivot Arm Assembly	4
26	52-3620	Locknut	4
27	52-7480	Spring Arm Assembly L.H.	2
28	5-4460	Washer — Pivot	4
29	3290-456	Washer — Belleville	4
30	3296-29	Locknut	4
31	44-0450	Decal — Rear Bagger	1
32	52-7490	Spring Arm Assembly R.H.	2

©The Toro Company — 1988

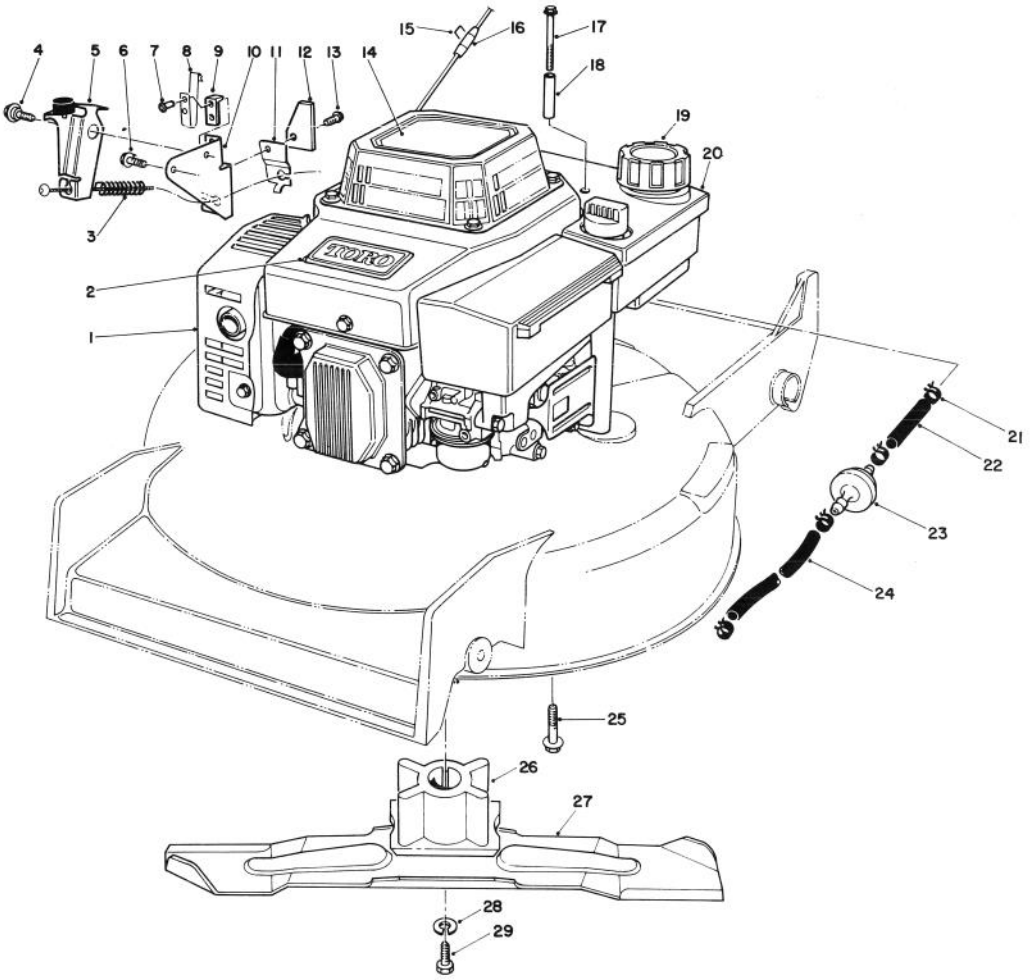

ENGINE ASSEMBLY

Ref. No.	Part No.	Description	No. Used
1	62-5440	Engine	1
2	46-8290	Plate — Logo, Toro	1
3	66-5370	Spring — Compression	1
4	56-6190	Screw — Shoulder, Metric	1
5	66-5380	Brake Plate Assembly	1
6	46-0790	Screw — Self Tapping	1
7	3290-459	Rivet	2
8	60-9010	Strap — Ground	1
9	60-9020	Strap — Insulation	1
10	53-4620	Plate — Mounting	1
11	53-4610	Clamp — Cable	1
12	53-4690	Stop — Ground Strap	1
13	12-5450	Screw — Self Tapping	1
14	55-8070	Decal — Recoil	1
15†		Staple	1
16	81-3980	Stop — Recoil	1

Ref. No.	Part No.	Description	No. Used
17	56-6610	Screw — Thread Forming, Hex Washer Hd.	2
18	57-3830	Spacer — Tabular	2
19	55-3570	Gas Cap Assembly	1
20	55-3530	Fuel Tank Assembly	1
21	2412-95	Clamp — Fuel Line	4
22	51-3211	Fuel Line	1
23	56-6360	Filter — Fuel	1
24	51-3214	Fuel Line	1
25	11-0590	Screw — Thread Forming	4
26	62-7540	Retainer — Blade	1
27	42-1000	Blade	1
28	3253-22	Washer — Lock	1
29	26-0670	Screw — Blade	1
*	56-6680	Tube — Oil Drain	1
*	12-4599	Mounting Plate Assembly (Incl. Ref. #7-10)	1

* Not Illustrated
† Obtain Locally

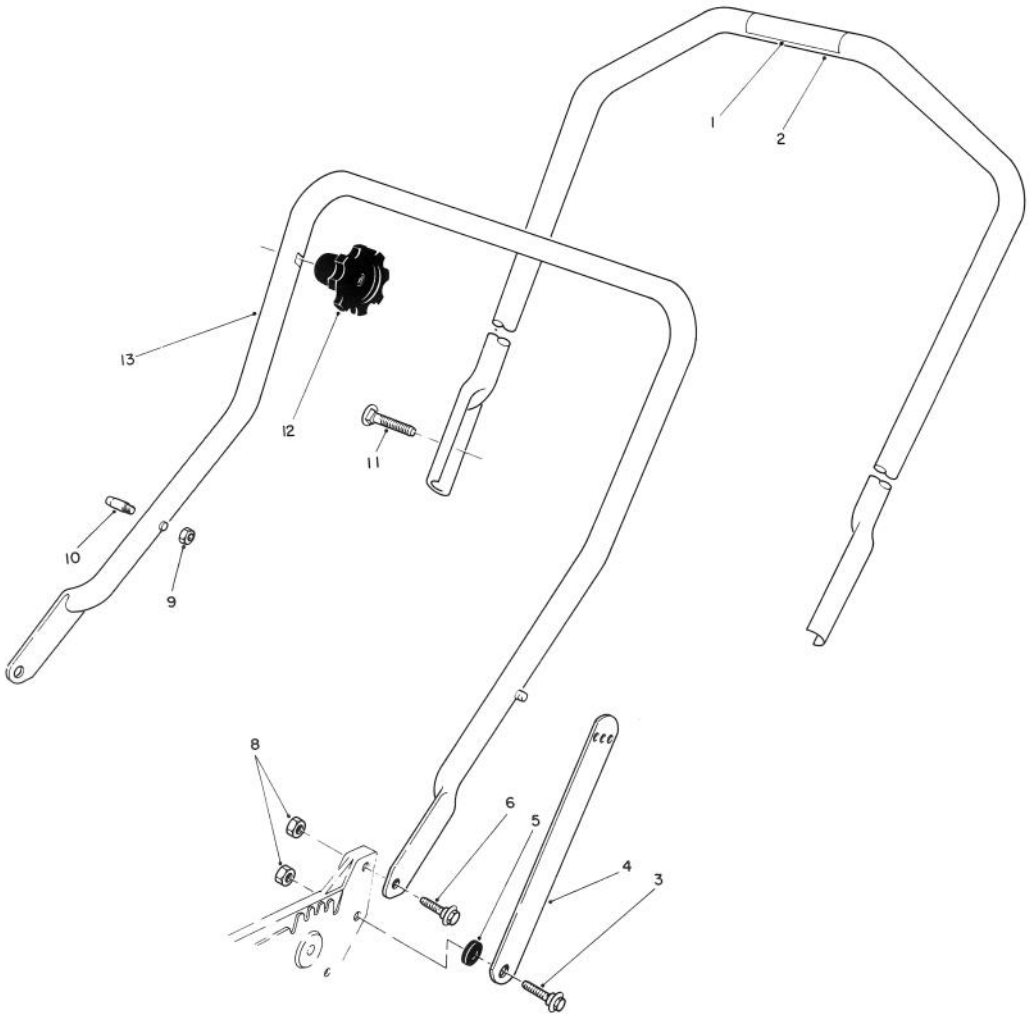

HANDLE ASSEMBLY

Ref. No.	Part No.	Description	No. Used
1	49-1770	Decal Warning	1
2	11-5589	Upper Handle Assembly (Incl. Ref. #4)	1
3	27-7210	Shoulder Screw	2
4	43-1370	Handle Latch	2
5	3-3287	Spacer — Handle Latch	2
6	27-7211	Shoulder Screw	2

Ref. No.	Part No.	Description	No. Used
8	3296-29	Nut — Lock	4
9†	3296-47	Nut — Lock	2
10†	49-2750	Pin — Handle	2
11	17-9421	Handle Screw	2
12	19-4050	Knob — Handle Release	2
13	43-1361	Lower Handle Assembly	1

† Service Replacement Parts

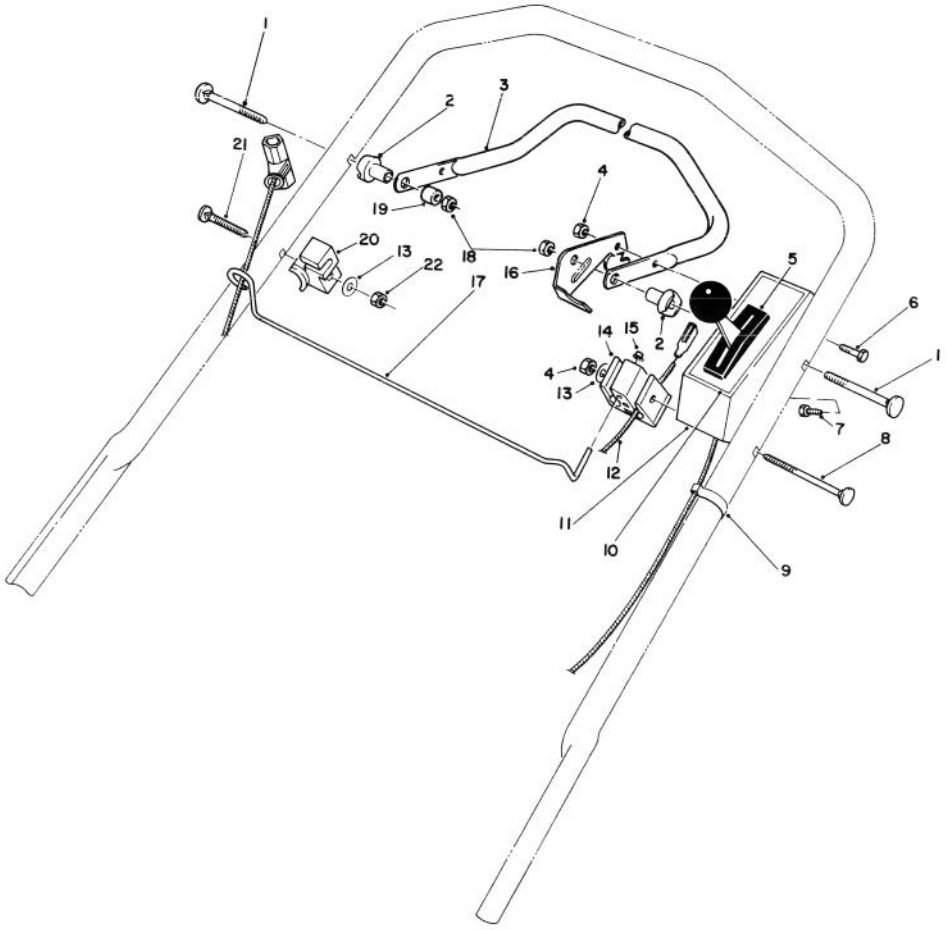

CONTROL ASSEMBLY

Ref. No.	Part No.	Description	No. Used
1	17-9421	Screw — Handle	2
2	49-1630	Support — Spacer	2
3	52-7430	Control Bar	1
4	3296-42	Nut — Lock	2
5	49-4193	Throttle — Control Bend #5 Sheath Lg. 49-1/2" Wire Lg. 2-3/8"	1
6	321-3	Screw — Hex Hd.	1
7	32104-76	Screw — Self Tapping	2
8	46-6434	Screw — Handle	1
9	218-465	Clip — Conduit	2
10	49-7790	Decal — Control Panel	1

Ref. No.	Part No.	Description	No. Used
11	49-1650	Control Cover	1
12	56-6094	Cable — Brake	1
13	3256-22	Washer	2
14	46-6980	Support Cable	1
15	3290-337	Nut — Push	1
16	66-5350	Lever — Control	1
17	46-7970	Rod — Rope	1
18	3296-58	Nut — Flange	2
19	256-276	Spacer — Nylon	1
20	46-7960	Catch — Rod	1
21	46-6430	Screw — Handle	1
22	3296-8	Locknut	1

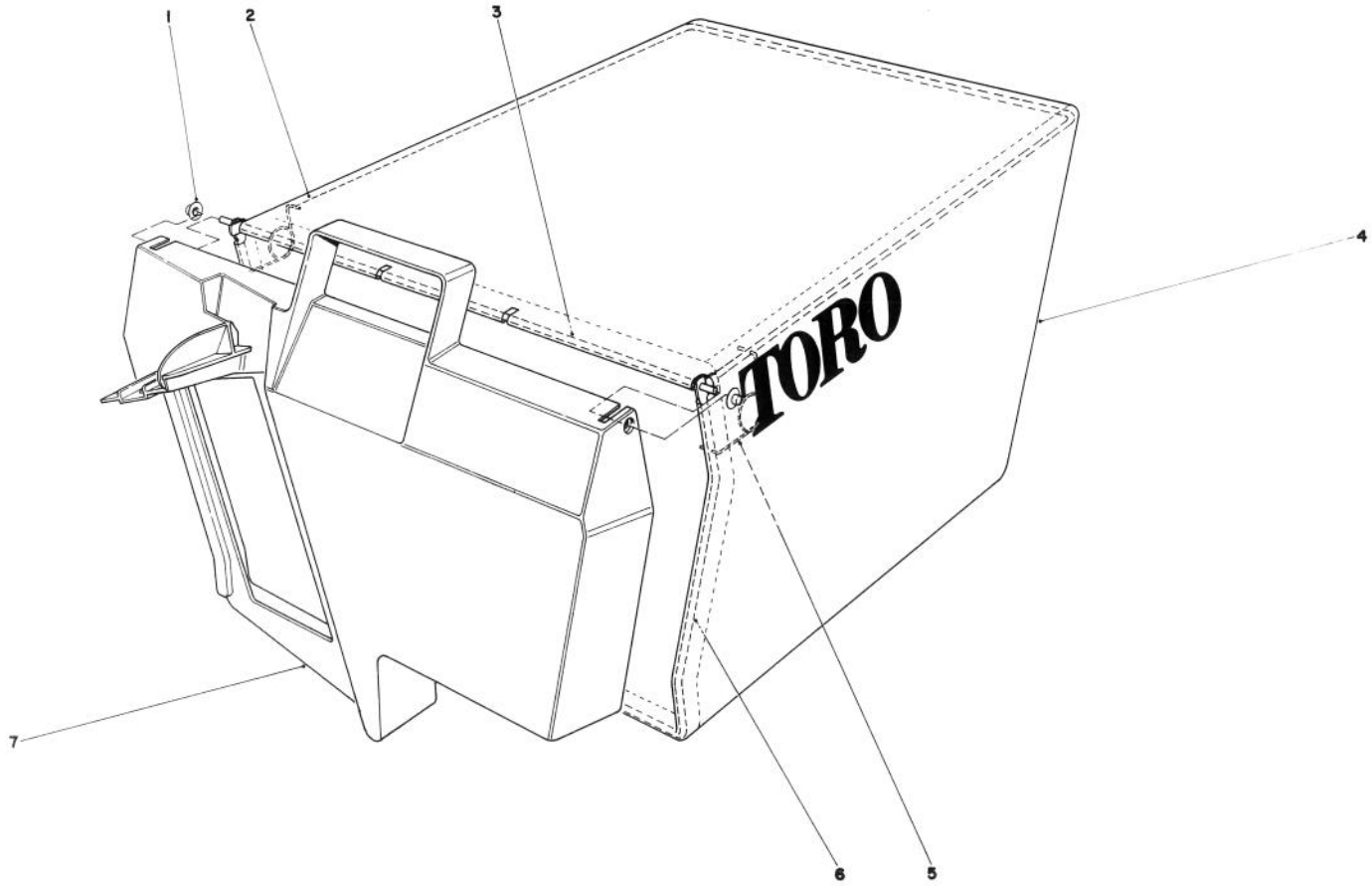

GRASS BAG ASSEMBLY NO. 11-0159

Ref. No.	Part No.	Description	No. Used
1	3290-422	Push Nut	2
2	42-4030	Bag Frame Upper	1
3	33-4820	Hinge Bag Door	1
4	8-2759	Grass Bag	1

Ref. No.	Part No.	Description	No. Used
5	36-6910	Spring	2
6	43-0030	Frame Bag	1
7	36-1331	Door Grass Bag	1

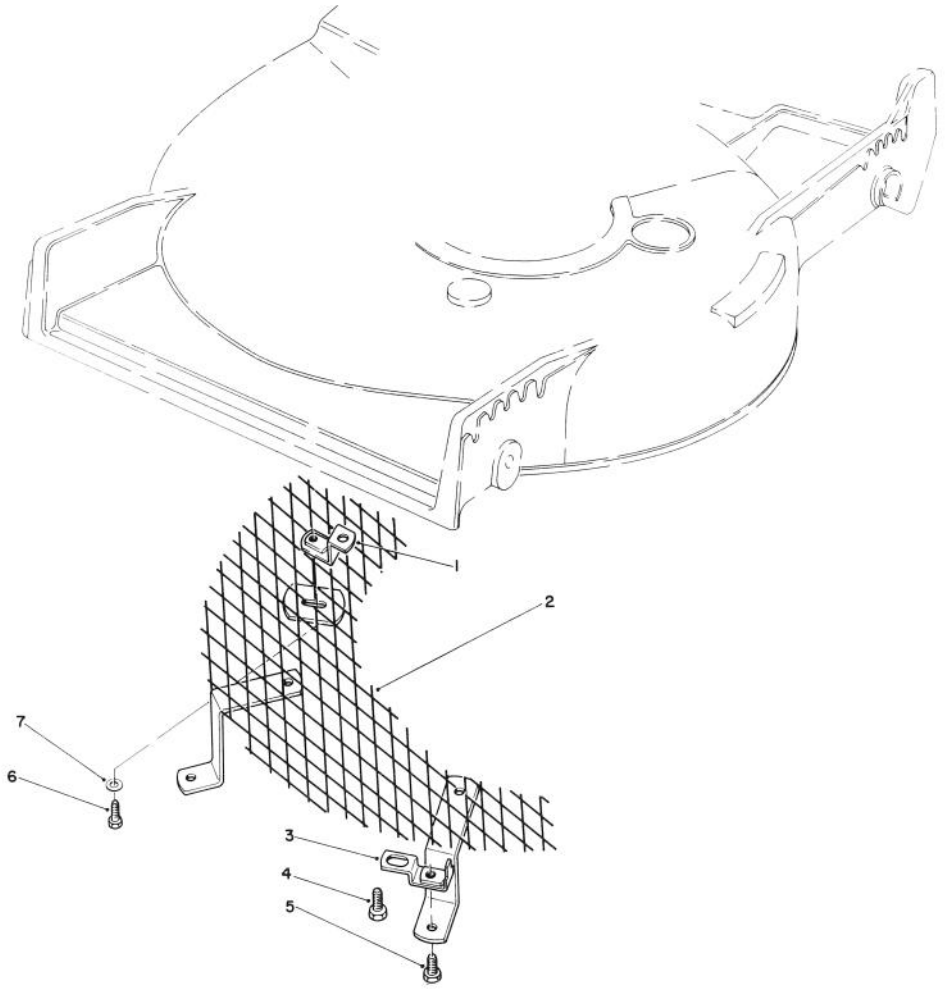

LEAF SHREDDER KIT MODEL NO. 59157 (Optional)

Ref. No.	Part No.	Description	No. Used
1	47-6260	Bracket	1
2	47-6230	Screen	1
3	46-4880	Mounting Bracket	2
4	32144-11	Screw — Self Tapping	3

Ref. No.	Part No.	Description	No. Used
5	321-3	Capscrew — Hex Hd.	2
6	321-5	Capscrew — Hex Hd.	1
7	3256-1	Washer	1

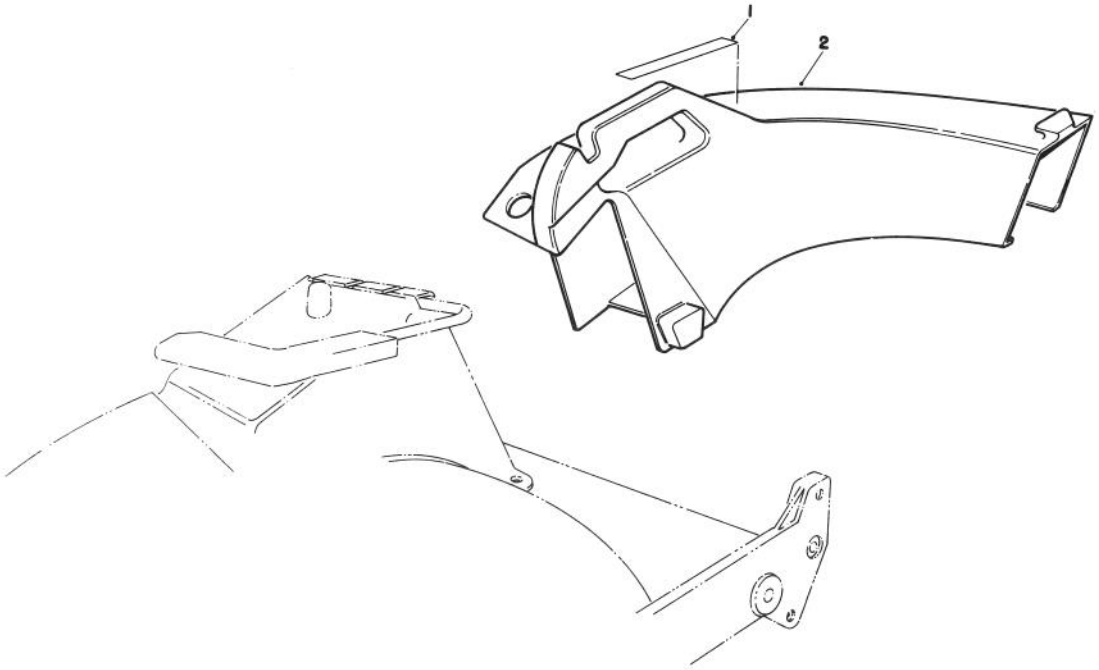

SIDE DISCHARGE CHUTE MODEL NO. 59168 (Optional)

Ref. No.	Part No.	Description	No. Used
1	39-9120	Decal — Caution	1

Ref. No.	Part No.	Description	No. Used
2	13-2239	Chute — Discharge (Incl. Ref. #1)	1

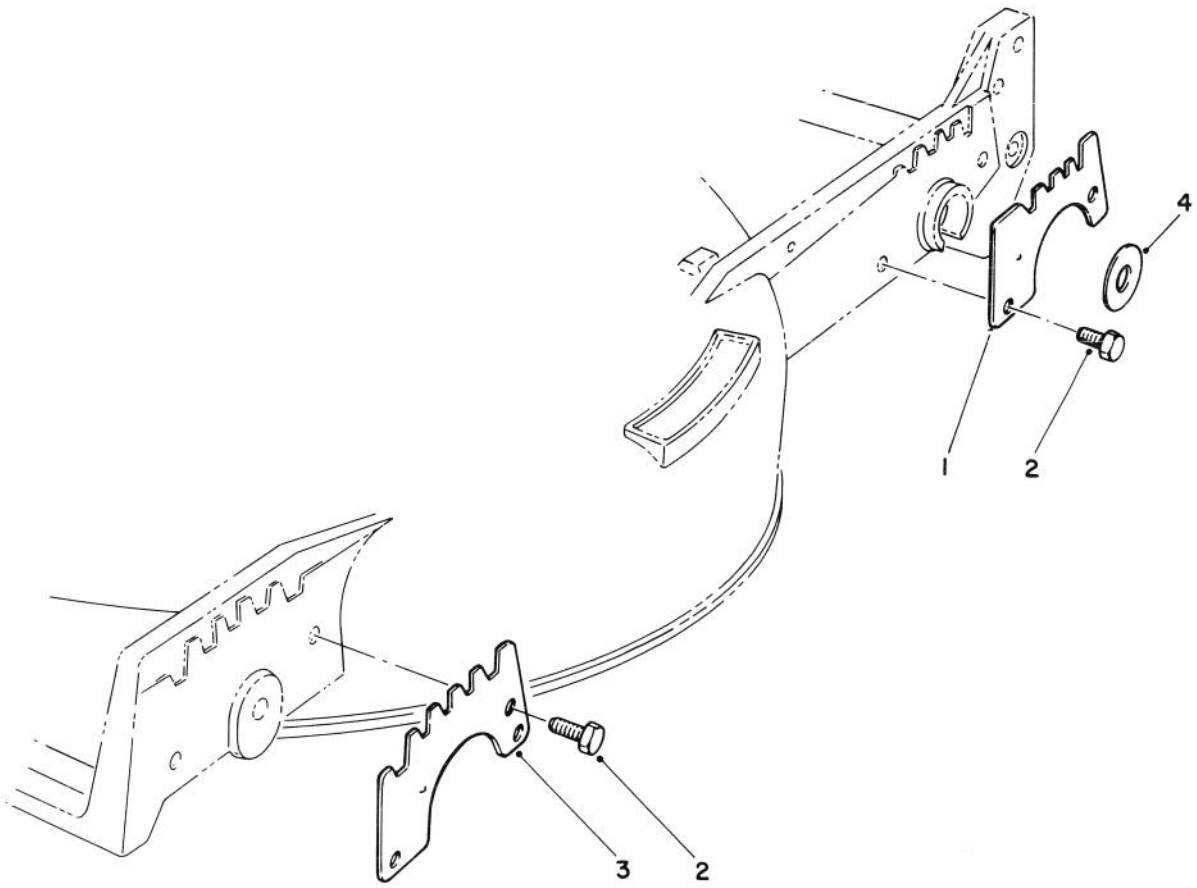

WEAR PLATE KIT MODEL NO. 49-4080 (Optional)

Ref. No.	Part No.	Description	No. Used
1	49-4070	Plate — Wear, Rear	2
2	32104-17	Screw — Thread Forming	8

Ref. No.	Part No.	Description	No. Used
3	43-5050	Plate — Wear, Front	2
4	33-0390	Washer	2

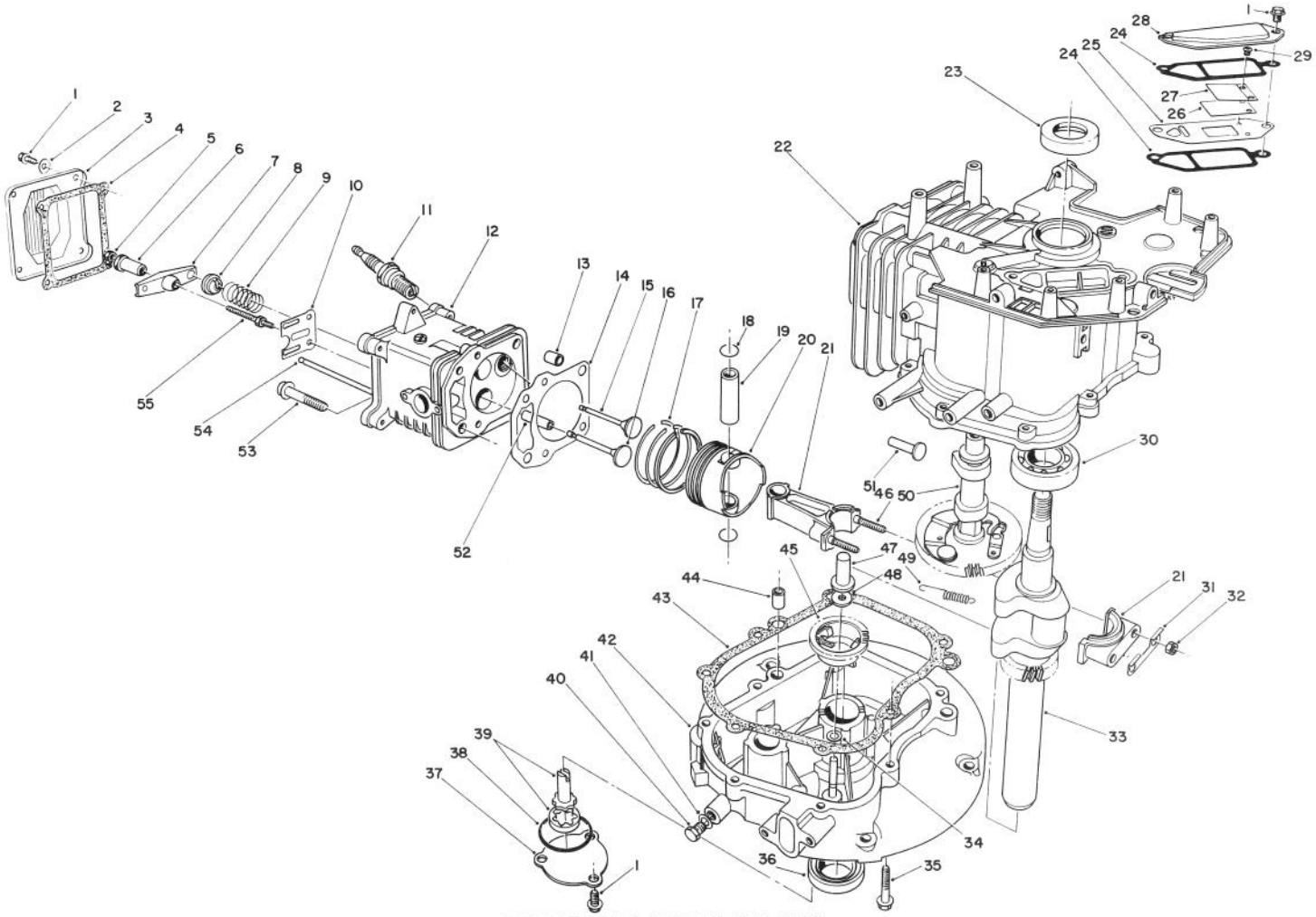

ENGINE ASSEMBLY (MODEL NO. VMH7)

Ref. No.	Part No.	Description	No. Used
1	81-1170	Bolt — Self Tapping	9
2	81-3790	Flat Washer	4
3	81-3780	Cover — Rocker Arm	1
4	81-3770	Gasket — Rocker Arm Cover	1
5	81-3760	Jam Nut	2
6	81-3750	Pivot — Rocker Arm	2
7	81-3740	Arm — Rocker	2
8	81-3730	Retainer — Valve Spring	2
9	81-3720	Spring — Valve	2
10	81-3710	Guide — Push Rod	1
11	81-3250	Spark Plug NGK BPR6ES	1
12	81-3700	Head — Cylinder (Incl. Ref. #52)	1
*	81-3840	Cylinder Head Assy. (Incl. Ref. #1-10, 12, 15, 16 & 52-55)	1
13	81-3690	Pin — Dowel	2
14	81-4710	Gasket — Cylinder Head	1
*	81-3820	Gasket Set	A/R
15	81-3670	Valve — Intake	1
16	81-3660	Valve — Exhaust	1
17	81-3650	Ring Set	1
18	50-0960	Circlip	2
19	81-3630	Pin — Piston	1
20	81-3620	Piston	1
21	81-3390	Connection Rod Assembly (Incl. Ref. #31, 32, & 46)	1
22	81-3280	Block — Engine (Incl. Ref. #23, & 30)	1
23	81-3290	Seal — Upper Crankshaft	1
24	81-3300	Gasket — Breather	2
25		Plate — Breather	1
26		Valve — Reed	1

Ref. No.	Part No.	Description	No. Used
*	81-3370	Reed Valve Assembly (Incl. Ref. #25-27, & 29)	1
27		Retainer — Reed Valve	1
28	81-3320	Cover — Breather	1
29		Screw — Reed Valve	2
30	81-3380	Ball Bearing	1
31	81-3400	Plate — Lock	1
32	50-0510	Nut	2
33	81-3420	Crankshaft	1
34	81-3440	Washer	1
35	81-3450	Bolt	7
36	81-3460	Seal — Lower Crankshaft	1
37	81-3470	Cover — Oil Pump	1
38	81-3480	O-Ring	1
39	81-3490	Oil Pump Assembly	1
40	81-4970	Plug — Oil Drain	1
41	81-3510	Gasket — Drain Plug	1
42	81-3520	Crankcase — Lower	1
43	81-3530	Gasket — Crankcase	1
44	50-0450	Pin — Dowel	2
45	81-3550	Governor Flyweight Assembly	1
46	81-3610	Stud — Connection Rod	2
47	81-3560	Plunger — Governor	1
48	81-3570	Washer	1
49	81-3580	Spring — Compression Release	1
50	81-3590	Camshaft Assy. (Incl. Ref. #49)	1
51	81-3600	Tappet	2
52	81-3830	Guide — Valve	2
53	50-0190	Bolt — Cylinder Head	4
54	81-3810	Rod — Push	2
55	81-3800	Stud — Rocker Arm	2
*	12-2599	Short Block Assembly	1

* Not Illustrated

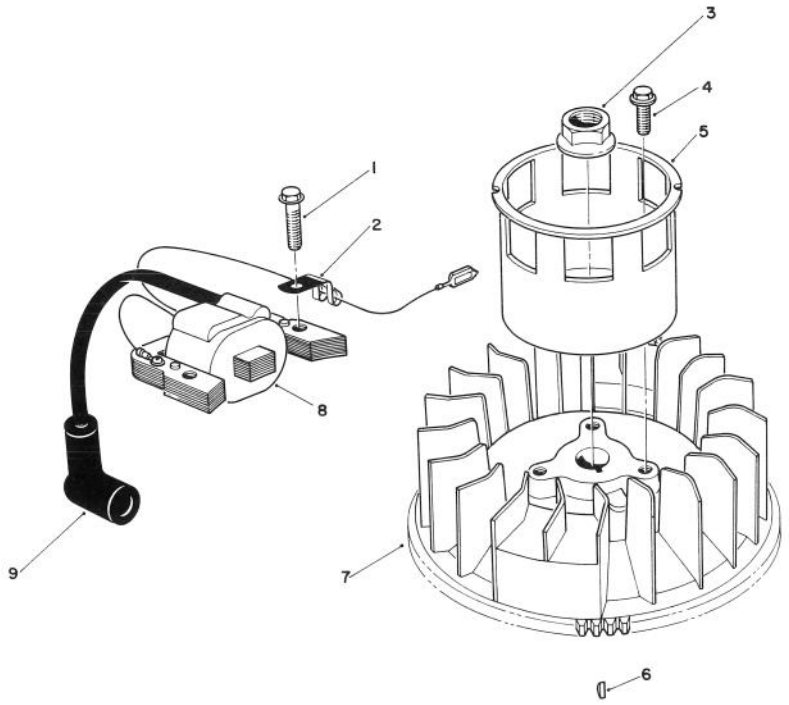

MAGNETO & FLYWHEEL ASSEMBLY (MODEL NO. VMH7)

Ref. No.	Part No.	Description	No. Used
1	53-0860	Bolt	2
2	81-1480	Clamp	1
3	81-3890	Nut	1
4	81-1300	Bolt	3
5	81-3910	Cup — Starter	1

Ref. No.	Part No.	Description	No. Used
6	81-3930	Key — Flywheel	1
7	81-3920	Flywheel	1
8	81-3850	Coil Assembly — Magneto	1
9	81-3860	Cover — Spark Plug	1

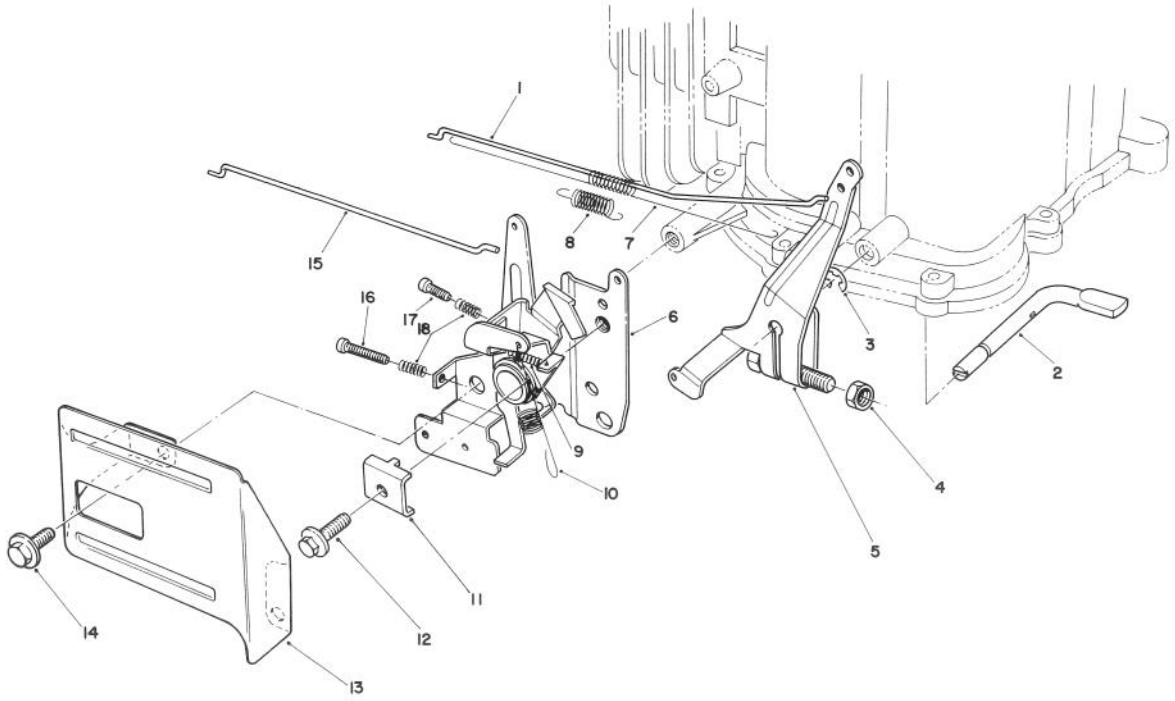

GOVERNOR ASSEMBLY (MODEL NO. VMH7)

Ref. No.	Part No.	Description	No. Used
1	81-4450	Rod — Carburetor	1
2	81-4480	Shaft — Governor	1
3	81-4540	E-Ring	1
4	81-4490	Nut	1
5	81-4500	Governor Arm Assembly	1
6	81-4510	Throttle & Choke Control	1
7	81-4470	Spring — Carburetor Rod	1
8	81-4460	Spring — Choke Lever	1
9	81-4570	Spring	1

Ref. No.	Part No.	Description	No. Used
10	81-4520	Spring — Governor	1
11	81-1690	Clamp — Cable	1
12	50-0130	Bolt	1
13	57-5750	Guard — Throttle	1
14	81-1170	Bolt	2
15	81-4440	Rod — Choke	1
16	81-4560	Screw	1
17	81-4550	Screw	1
18	81-2900	Spring	2

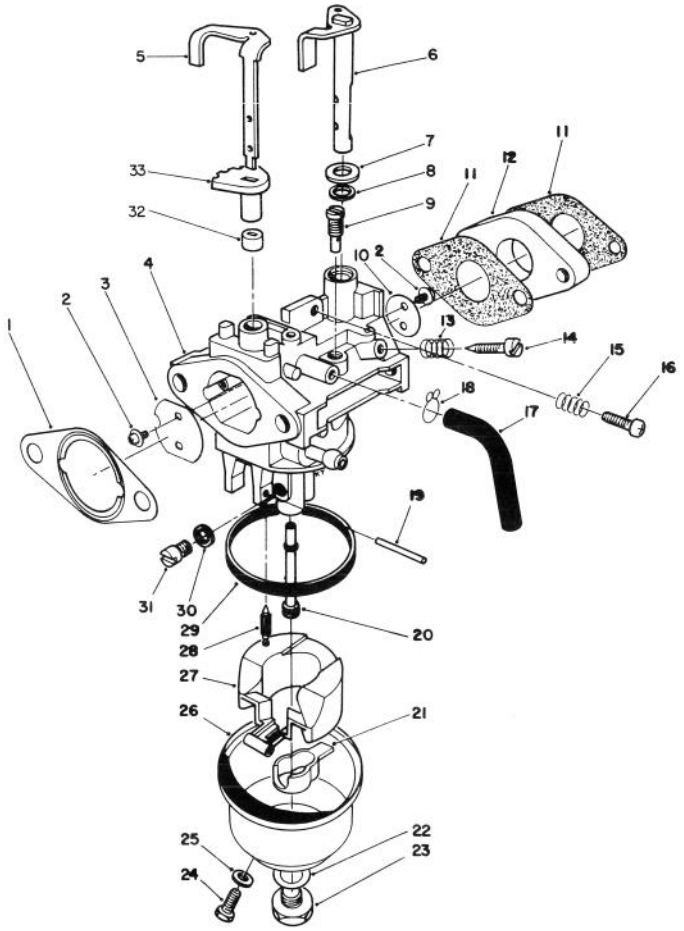

CARBURETOR ASSEMBLY (MODEL NO. VMH7)

Ref. No.	Part No.	Description	No. Used
1	81-4250	Gasket — Air Cleaner	1
2	81-2710	Screw — Choke Valve	4
3	81-2720	Valve — Choke	1
4		Body — Carburetor	1
5	81-5500	Shaft — Choke Valve	1
6	81-2920	Shaft — Throttle Valve	1
7	81-4280	Washer	1
8	81-4290	Seal — Throttle Shaft	1
9	81-1030	Jet — Pilot (#40)	1
10	81-2940	Valve — Throttle	1
11	81-2570	Gasket — Carburetor	2
12	81-0460	Block — Insulator	1
13	81-2580	Spring — Pilot Screw	1
14	50-2360	Screw — Pilot	1
15	81-4320	Spring — Idle Stop	1
16	50-0250	Screw — Idle Stop	1
17	81-4310	Tube — Bowl Vent	1
18	81-4300	Clamp	1
19	81-0980	Pin — Hinge	1
20	81-4330	Nozzle — Main	1

Ref. No.	Part No.	Description	No. Used
21	81-4940	Spacer — Float	1
22	81-2650	Gasket — Bowl Screw	1
23	81-2660	Screw — Bowl	1
24	81-2670	Screw — Drain	1
25	81-2680	Gasket — Drain Screw	1
26	81-4340	Bowl — Float	1
27	81-4920	Float	1
28	81-4700	Needle	1
29	81-2630	Gasket — Float Bowl	1
30	81-4350	Spacer	1
31	50-4760	Main Jet (#82.5)	1
32	81-5530	Ring — Lower Choke	1
33	81-5520	Ring — Upper Choke	1
*	81-4270	Shaft — Choke Assembly (Incl. Ref. #5, 32-33)	1
*	81-1040	Main Jet (#80 High Alt.)	A/R
*	81-4890	Carburetor Kit (Incl. Ref. #1, 11, 22, 25, 28, & 29)	A/R
*	81-4750	Carburetor Assembly (Incl. Ref. #2-33)	1

* Not Illustrated

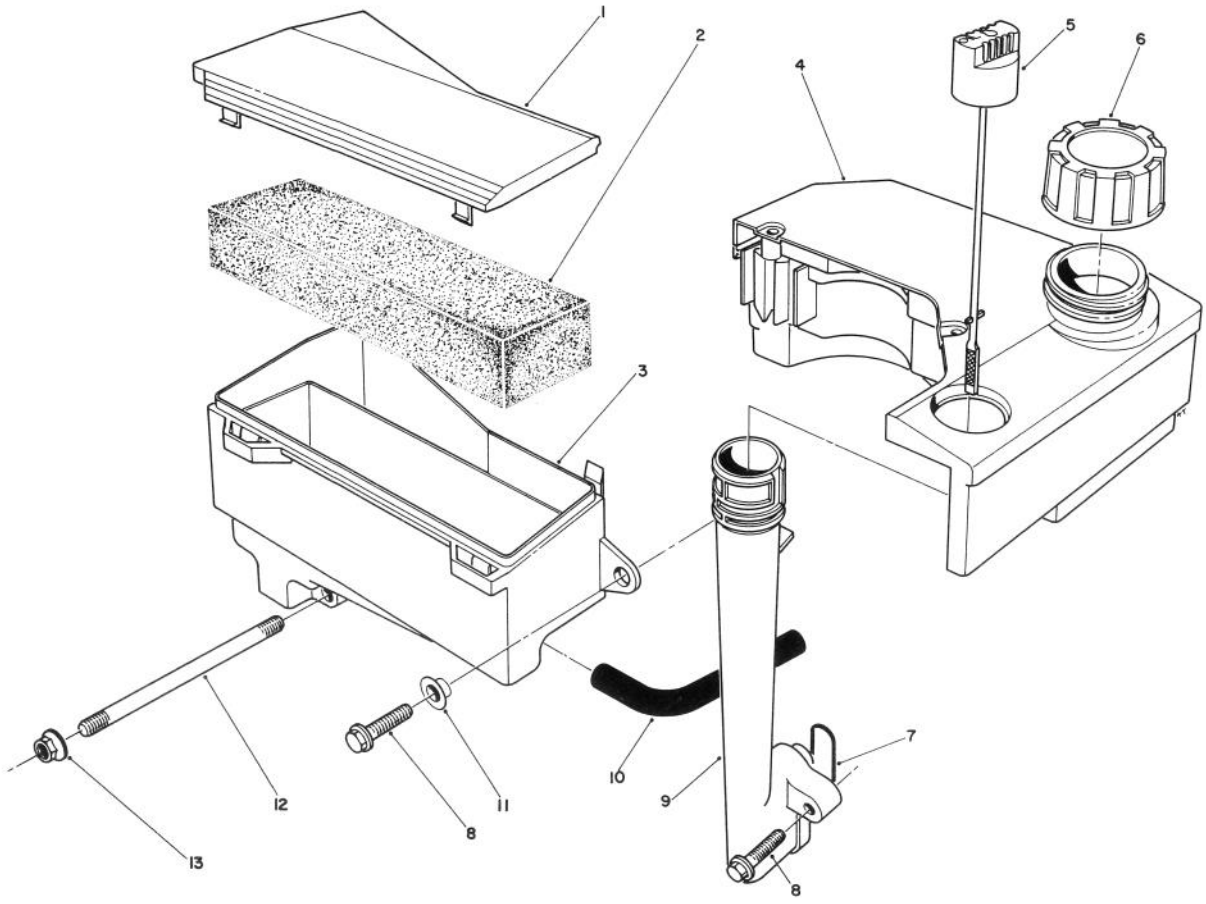

AIR CLEANER & FUEL TANK ASSEMBLY (MODEL NO. VMH7)

Ref. No.	Part No.	Description	No. Used
1	81-4110	Cap — Air Cleaner	1
2	81-4120	Filter — Foam	1
3	81-4240	Air Cleaner Assembly (Incl. Ref. #1)	1
4	55-3530	Fuel Tank	1
5	81-4140	Dipstick — Oil	1
6	55-3570	Gas Cap	1

Ref. No.	Part No.	Description	No. Used
7	81-4150	O-Ring — Oil Tube	1
8	81-4160	Bolt	3
9	81-4170	Tube — Oil Fill	1
10	81-4180	Hose — Crankcase Breather	1
11	81-4200	Spacer	1
12	81-4220	Stud — Carburetor	2
13	50-7180	Nut	2

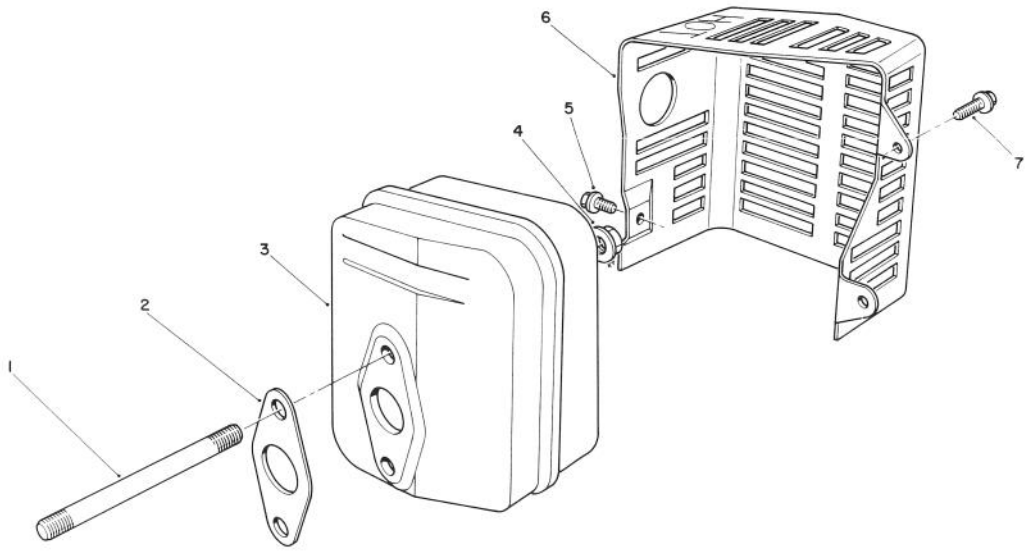

MUFFLER ASSEMBLY (MODEL NO. VMH7)

Ref. No.	Part No.	Description	No. Used
1	81-4380	Stud — Muffler	2
2	81-4390	Gasket — Muffler	1
3	81-4400	Muffler	1
4	50-0530	Nut	2
5	81-4420	Screw	1

Ref. No.	Part No.	Description	No. Used
6	81-4430	Cover — Muffler	1
7	81-1170	Bolt	2
*	56-6730	Spark Arrester Kit (Incl. Ref. #2) (Optional)	1

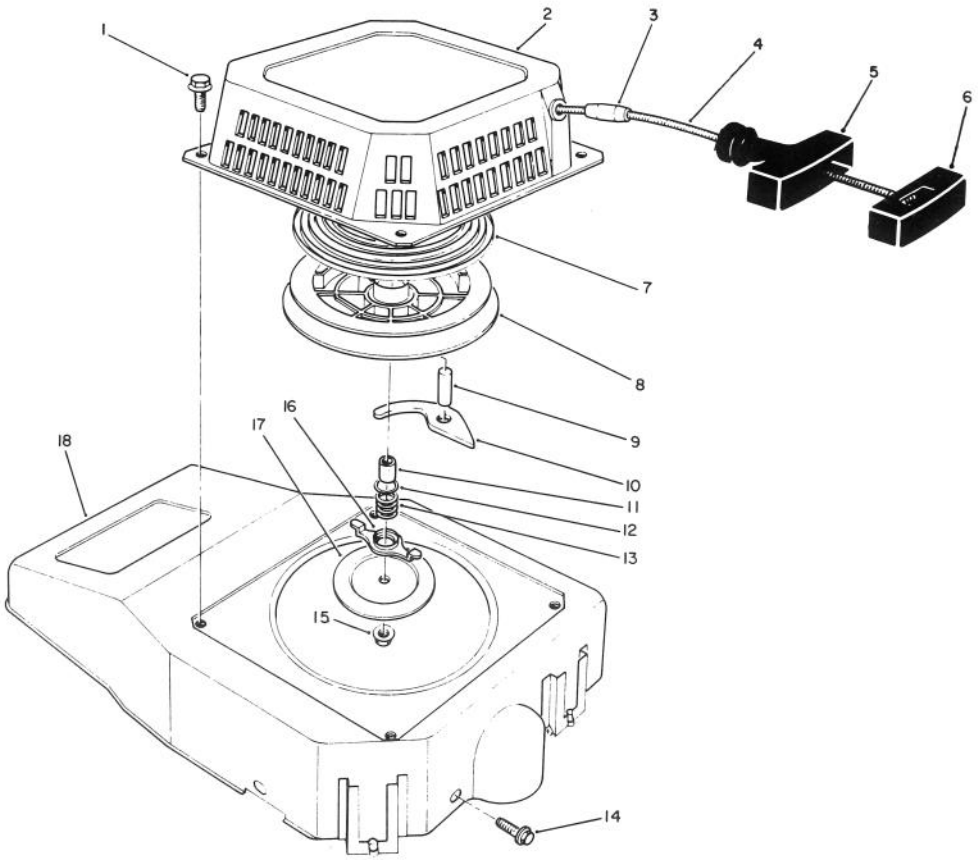

RECOIL ASSEMBLY (MODEL NO. VMH7)

Ref. No.	Part No.	Description	No. Used
1	81-1280	Bolt	4
2	81-3970	Case — Recoil	1
3	81-3980	Stop	1
4	81-1270	Rope — Recoil	1
5	81-4000	Handle	1
6	81-4960	Retainer — Rope Handle	1
7	81-4010	Spring — Recoil	1
8	81-4020	Reel — Rope Pulley	1
9	81-4030	Pin	1
10	81-4040	Pawl	1

Ref. No.	Part No.	Description	No. Used
11	81-4050	Spacer	1
12	81-4060	Washer	1
13	81-4070	Spring — Friction	1
14	81-1170	Bolt	3
15	81-4100	Locknut	1
16	81-4080	Guide — Pawl	1
17	81-4090	Plate — Friction	1
18	81-3960	Shroud — Blower	1
*	81-3260	Recoil Starter Assembly	1

* Not Illustrated

PRODUCT CHANGES

In an effort to make improvements available to TORO owners as quickly as possible, minor changes are incorporated into Toro's products from time to time that do not become immediately shown in the Parts Catalog. If such a change apparently has been made in your unit, which is not reflected in your manual, see your TORO Distributor or his Authorized TORO Service Dealer for information and part numbers.

IDENTIFICATION AND ORDERING

MODEL AND SERIAL NUMBERS

The Mower has two identification numbers: a model number and a serial number. The two numbers are stamped on a decal which is located on the mower housing between the rear wheels. In any correspondence concerning the mower, supply model and serial numbers to assure that correct information and replacement parts are obtained.

To order replacement parts from an Authorized TORO Service Dealer, supply the following information:

1. Model and serial numbers of the mower.
2. Part number, description, and quantity of part(s) desired.

Note: Do not order by reference number if a parts catalog is being used; use the PART NUMBER.

The Toro Promise

A Two Year Limited Warranty

On All

Gasoline Powered Consumer Products

The Toro Company promises to repair your TORO Product if defective in materials or workmanship. The following time periods from the date of purchase apply:

Residential Product ..... 2 Years
Residential Products Used Commercially ..... 45 Days

The costs of parts and labor are included, but the customer pays the transportation costs. Just return any residential product to an Authorized TORO Service Dealer or TORO Distributor.

Should you feel your TORO Product is defective and wish to rely on The Toro Promise, the following procedure is recommended:

1. Contact any Authorized TORO Service Dealer, TORO Master Service Dealer, or TORO Distributor (the Yellow Pages of your telephone directory is a good reference source).
2. He will either instruct you to return the product to him or recommend another Authorized TORO Service outlet which might be more convenient.
3. Bring the product along with your original sales slip, or other evidence of purchase date, to the service dealer.
4. The servicing dealer will inspect the unit, advise you whether the product is defective and, if so, make all repairs necessary to correct the defect without extra charge to you.

If for any reason you are dissatisfied with the dealer's analysis of the defect or the service performed, you may contact us.

Write:

TORO Consumer Service Department
8111 Lyndale Avenue South
Minneapolis, Minnesota 55420

The above remedy of product defects through repair by an Authorized TORO Service Dealer is the purchaser's sole remedy for any defect.

THERE IS NO OTHER EXPRESS WARRANTY. ALL IMPLIED WARRANTIES OF MERCHANTABILITY AND FITNESS FOR USE ARE LIMITED TO THE DURATION OF THE EXPRESS WARRANTY.

Some states do not allow limitations on how long an implied warranty lasts, so the above limitation may not apply to you.

This warranty applies only to parts or components which are defective and does not cover repairs necessary due to normal wear, misuse, accidents, or lack of proper maintenance. Regular, routine maintenance of the unit to keep it in proper operating condition is the responsibility of the owner.

All warranty repairs reimbursable under The Toro Promise must be performed by an Authorized TORO Service Dealer using Toro approved replacement parts.

Repairs or attempted repairs by anyone other than an Authorized TORO Service Account are not reimbursable under The Toro Promise. In addition, these unauthorized repair attempts may result in additional malfunctions, the correction of which is not covered by warranty.

THE TORO COMPANY IS NOT LIABLE FOR INDIRECT, INCIDENTAL OR CONSEQUENTIAL DAMAGES IN CONNECTION WITH THE USE OF THE PRODUCT INCLUDING ANY COST OR EXPENSE OF PROVIDING SUBSTITUTE EQUIPMENT OR SERVICE DURING PERIODS OF MALFUNCTION OR NON-USE.

Some states do not allow the exclusion or limitation of incidental or consequential damages, so the above limitation or exclusion may not apply to you.

This warranty gives you specific legal rights, and you may also have other rights which vary from state to state.

COUNTRIES OTHER THAN THE UNITED STATES OR CANADA

Customers who have purchased TORO products exported from the United States or Canada should contact their TORO Distributor (Dealer) to obtain guarantee policies for your country, province or state. If for any reason you are dissatisfied with your Distributor's service or have difficulty obtaining guarantee information, contact the TORO importer. If all other remedies fail, you may contact us at The Toro Company.

Compliance with Radio Interference Regulations Certified.
Certifie Conforme au Reglement sur le Brouillage Radioelectrique.

LTS-803226