FORM NO. 3313-546

TORO

MODEL NO. 20586-8000001 & UP

**PARTS CATALOG**

# 18" H.P. REAR BAGGER

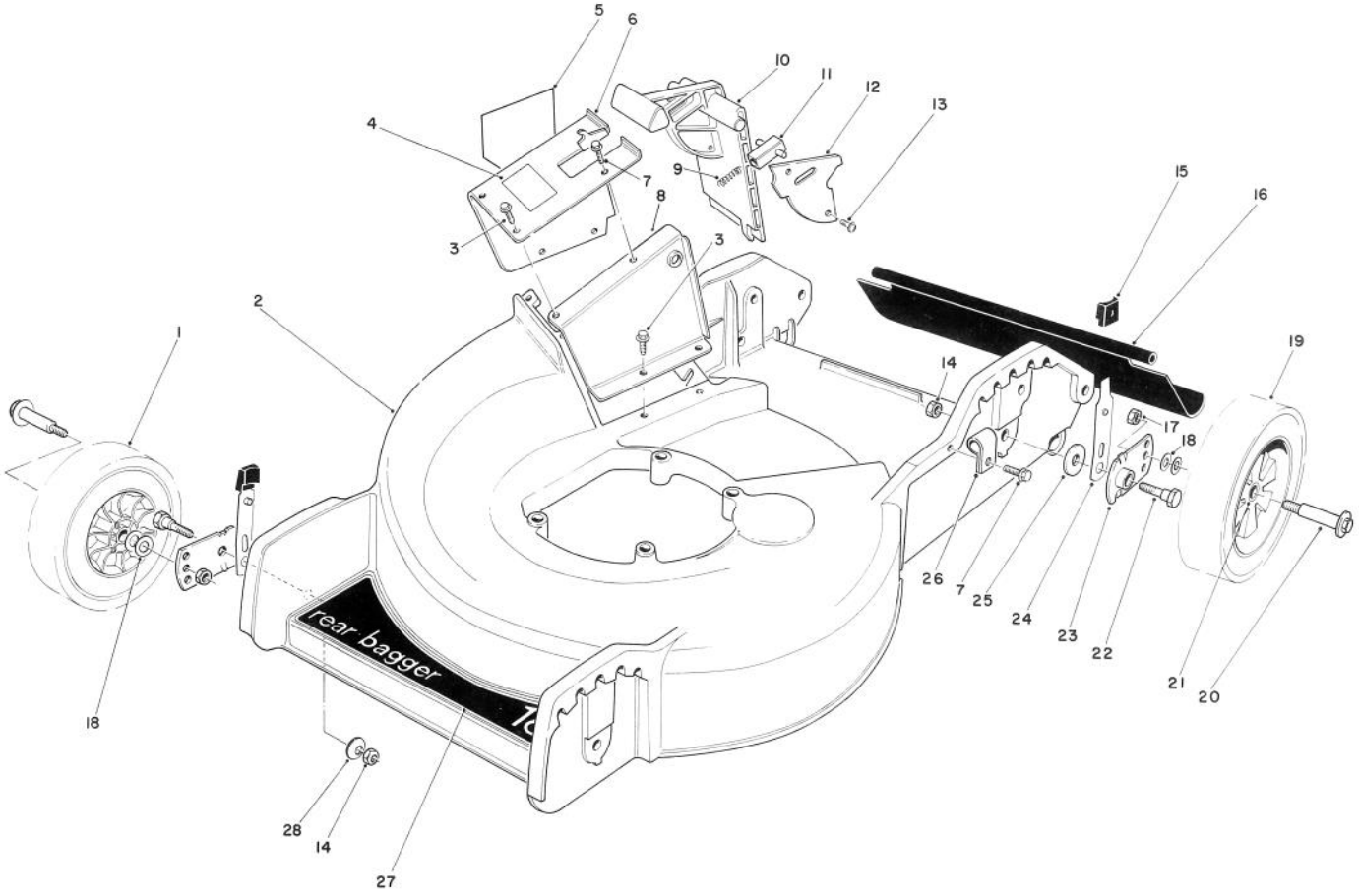


## HOUSING ASSEMBLY

| Ref. No. | Part No. | Description | No. Used |
|---|---|---|---|
| 1 | 27-6210 | Wheel & Tire Assembly (Incl. Ref. #21) | 2 |
| 2 | 12-1089 | Housing | 1 |
| 3 | 12-3270 | Screw — Thread Forming | 6 |
| 4 | 47-6660 | Decal — Door | 1 |
| 5 | 39-5770 | Decal — Danger | 1 |
| 6 | 11-6839 | Tunnel — Outer (Incl. Ref. #4 & 5) | 1 |
| 7 | 12-5450 | Screw — Thread Forming | 2 |
| 8 | 49-8030 | Tunnel — Inner | 1 |
| 9 | 33-0450 | Spring — Latch | 1 |
| 10 | 33-0410 | Door — Mulching | 1 |
| 11 | 47-5550 | Latch — Door | 1 |
| 12 | 33-0440 | Cover — Door | 1 |
| 13 | 32144-32 | Screw — Self Tapping Hex Hd. | 2 |
| 14 | 3296-29 | Nut — Lock | 4 |

| Ref. No. | Part No. | Description | No. Used |
|---|---|---|---|
| 15 | 25-7740 | Knob — Arm | 4 |
| 16 | 33-2380 | Rear Safety Shield | 1 |
| 17 | 52-3620 | Nut — Lock | 4 |
| 18 | 40-1940 | Washer — Wheel Bolt | 8 |
| 19 | 27-6200 | Wheel & Tire Assembly (Incl. Ref. #21) | 2 |
| 20 | 27-6230 | Bolt — Wheel Hex Hd. | 4 |
| 21 | 27-6250 | Bushing — Wheel | 8 |
| 22 | 3-0655 | Screw — Pivot Hex Hd. | 4 |
| 23 | 33-0400 | Pivot Arm | 4 |
| 24 | 25-8000 | Spring Arm | 4 |
| 25 | 33-0390 | Washer — Pivot | 4 |
| 26 | 2412-52 | Clamp — Conduit | 1 |
| 27 | 46-7920 | Decal — Deck | 1 |
| 28 | 3290-456 | Washer — Belleville | 2 |
| * | | Loose Parts | 1 |

* Not Illustrated

©The TORO Company — 1988

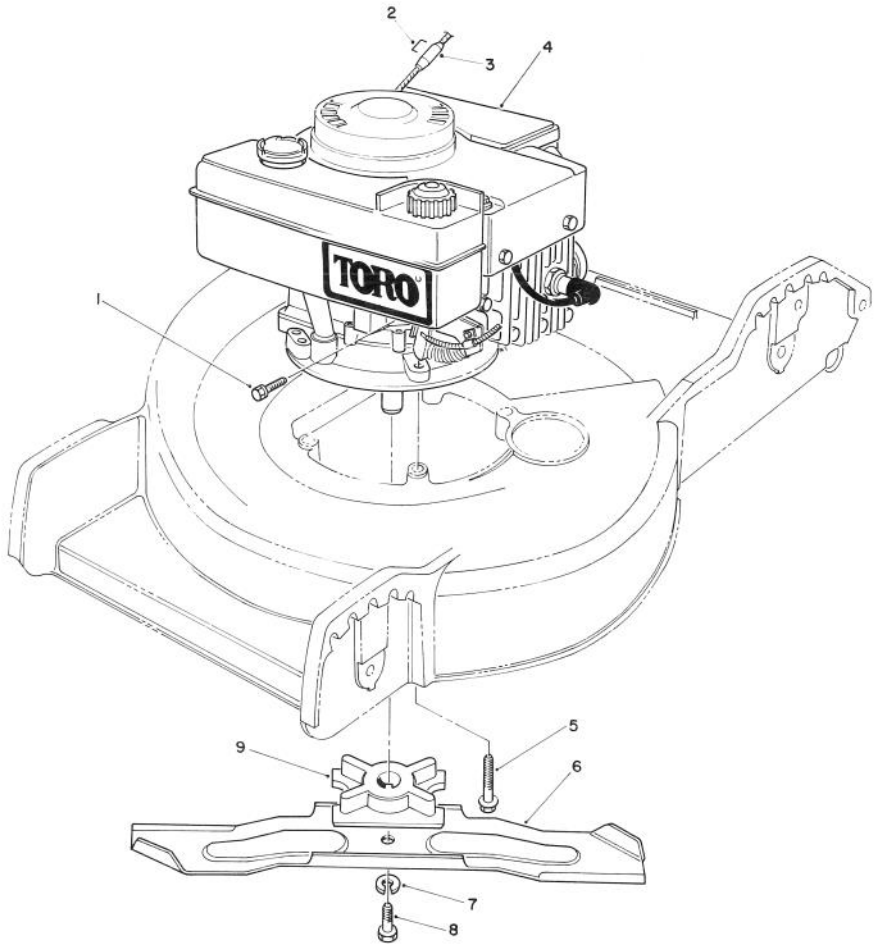


# ENGINE ASSEMBLY

| Ref. No. | Part No. | Description | No. Used |
|---|---|---|---|
| 1 | 2210-250 | Screw — Hex Hd. | 1 |
| 2† | | Staple | 1 |
| 3 | | Stop — Rope | 1 |
| 4 | | Engine | 1 |
| 5 | 11-0581 | Screw — Engine | 3 |

| Ref. No. | Part No. | Description | No. Used |
|---|---|---|---|
| 6 | 33-0490 | Blade — 18″ | 1 |
| 7 | 3253-22 | Lockwasher | 1 |
| 8 | 26-0671 | Screw — Blade | 1 |
| 9 | 49-7900 | Retainer — Blade | 1 |

†Obtain Locally

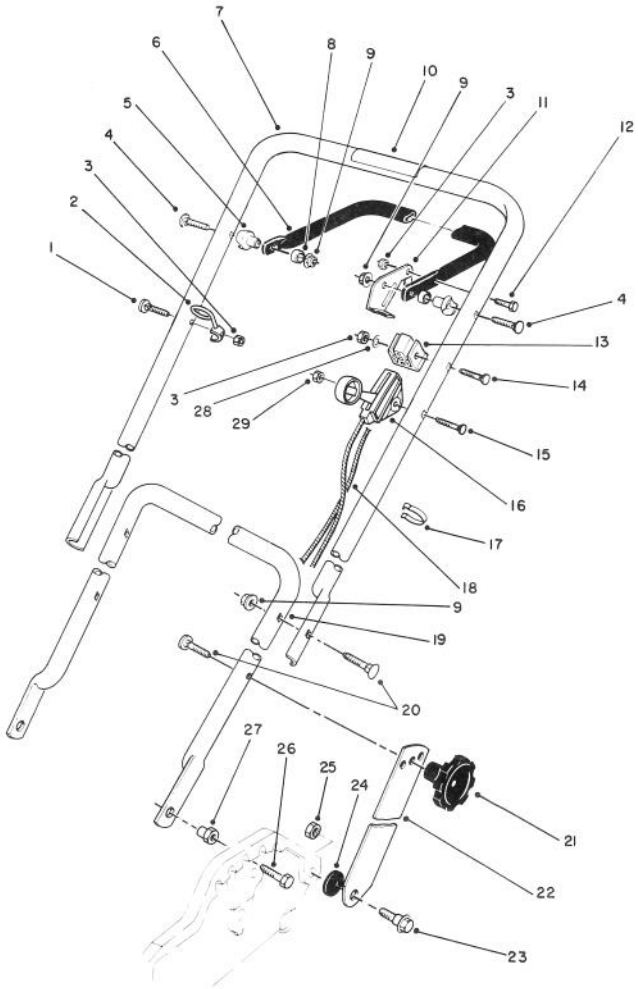


# HANDLE & THROTTLE CONTROL ASSEMBLY

| Ref. No. | Part No. | Description | No. Used |
|---|---|---|---|
| 1 | 46-6433 | Screw — Guide | 1 |
| 2 | 46-8080 | Guide — Rope | 1 |
| 3 | 3296-42 | Locknut | 3 |
| 4 | 17-9421 | Screw — Handle | 2 |
| 5 | 49-1630 | Support — Spacer | 2 |
| 6 | 49-4221 | Bar — Control | 1 |
| 7 | 13-2299 | Handle — Upper (Incl. Ref. #10) | 1 |
| 8 | 256-276 | Bushing — Nylon | 2 |
| 9 | 3296-58 | Locknut — Flanged | 2 |
| 10 | 52-7510 | Decal — Warning | 1 |
| 11 | 66-5350 | Lever — Control | 1 |
| 12 | 321-3 | Capscrew — Hex. Hd. | 1 |
| 13 | 46-6980 | Support — Cable | 1 |
| 14 | 46-6434 | Screw — Handle | 1 |
| 15 | 46-6430 | Screw — Handle | 1 |

| Ref. No. | Part No. | Description | No. Used |
|---|---|---|---|
| 16 | 52-0068 | Control — Throttle (Bend #1, 42'' Lg.) (Wire Lg. 1¾ Lg.) | 1 |
| 17 | 218-465 | Clip — Cable | 2 |
| 18 | 46-8012 | Cable Brake | 1 |
| 19 | 50-9920 | Handle — Lower | 1 |
| 20 | 17-9424 | Screw — Handle | 4 |
| 21 | 19-4050 | Knob — Handle | 2 |
| 22 | 43-1370 | Latch — Handle | 2 |
| 23 | 27-7210 | Screw — Shoulder | 2 |
| 24 | 3-3287 | Spacer — Latch Handle | 2 |
| 25 | 3296-29 | Locknut | 2 |
| 26 | 322-5 | Capscrew — Hex. Hd. | 2 |
| 27 | 12-2080 | Nut — Shoulder | 2 |
| 28 | 3256-22 | Washer — Flat | 1 |
| 29 | 3296-56 | Locknut | 1 |

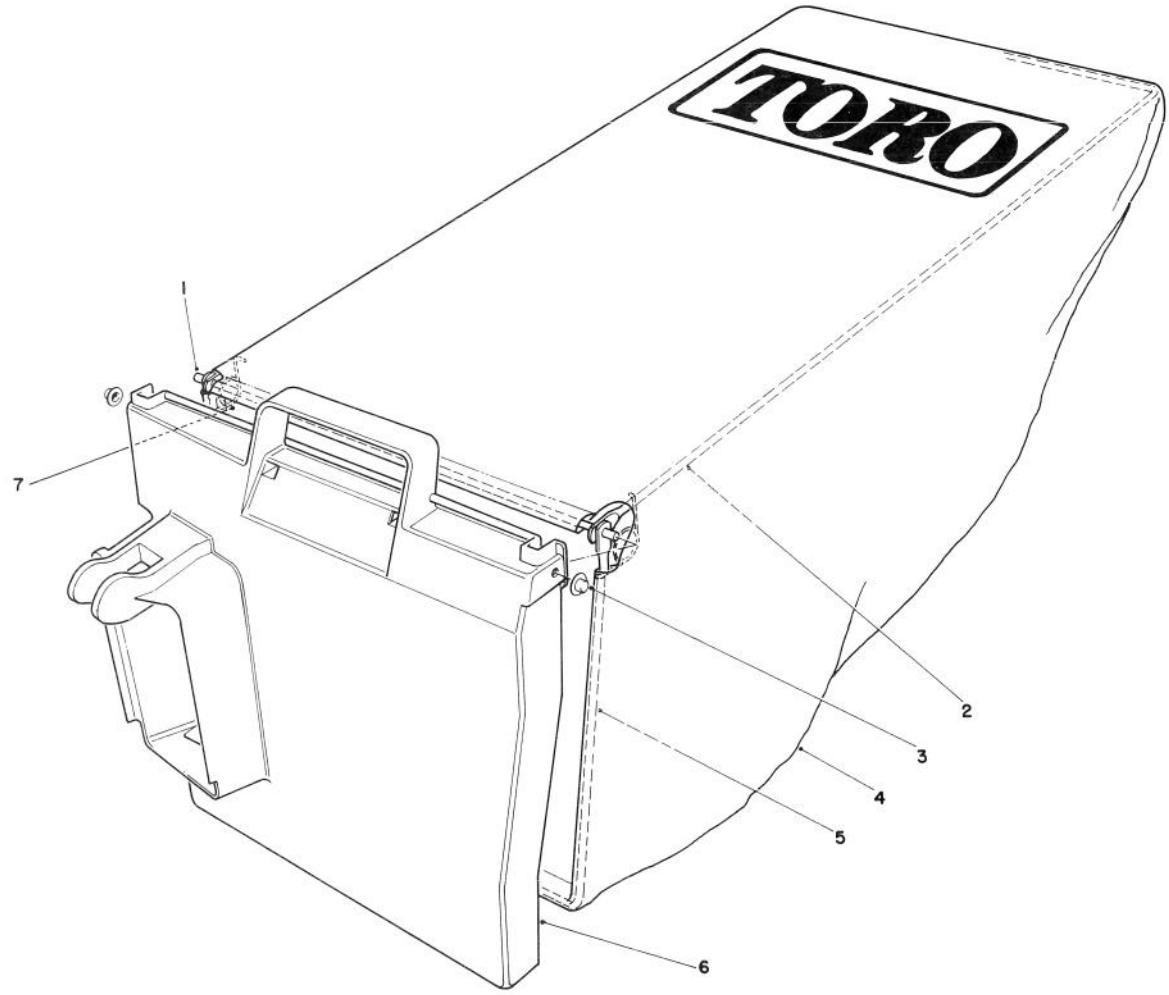


# GRASS BAG ASSEMBLY NO. 12-8859

| Ref. No. | Part No. | Description | No. Used |
|---|---|---|---|
| 1 | 50-9670 | Hinge | 1 |
| 2 | 66-1520 | Frame — Bag, Upper | 1 |
| 3 | 3290-422 | Push Nut Washer Cap | 2 |
| 4 | 66-1510 | Bag | 1 |

| Ref. No. | Part No. | Description | No. Used |
|---|---|---|---|
| 5 | 66-1530 | Frame Bag | 1 |
| 6 | 33-2980 | Door — Bag | 1 |
| 7 | 36-6910 | Spring | 2 |

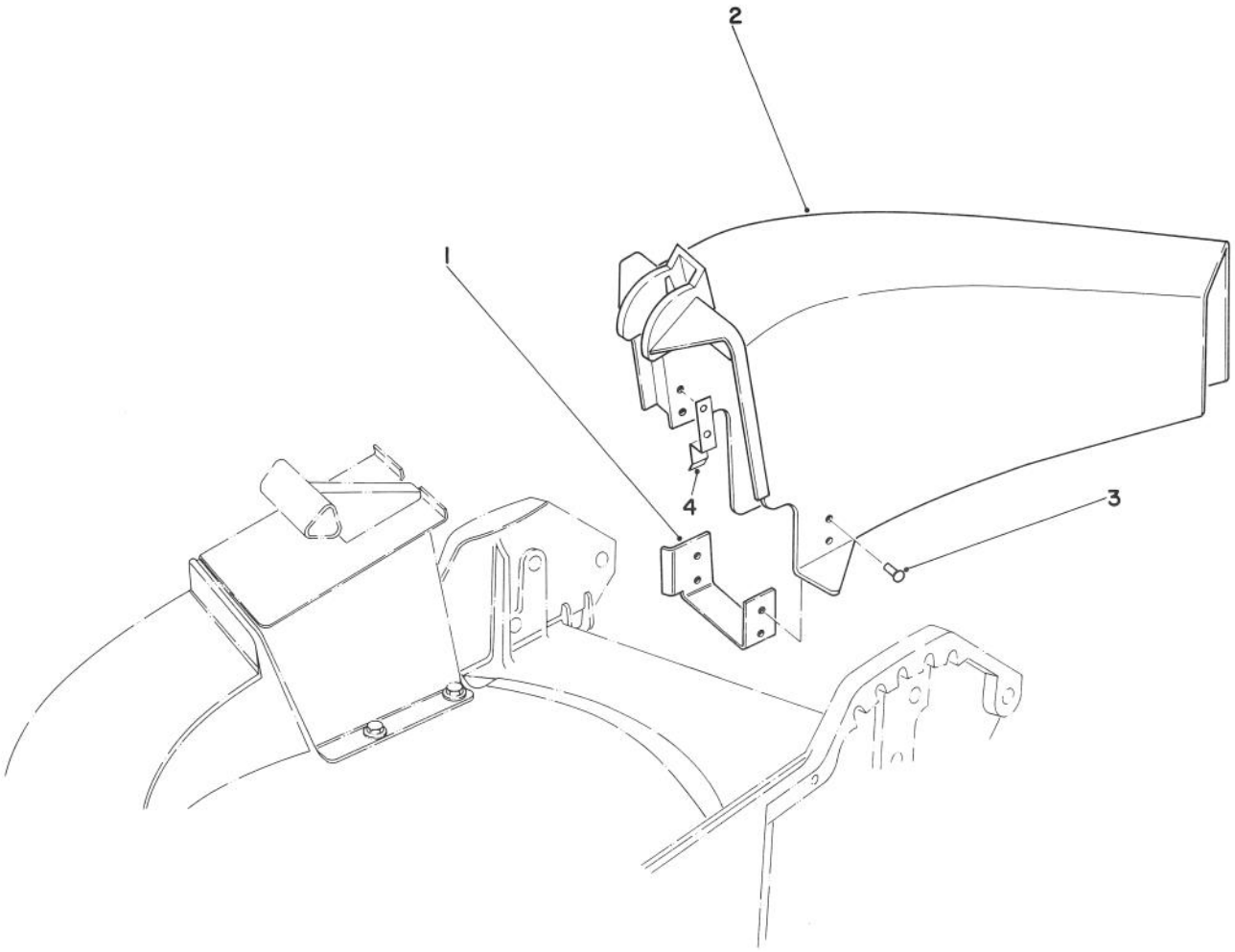


# SIDE DISCHARGE KIT NO. 59107 (Optional)

| Ref. No. | Part No. | Description | No. Used |
|---|---|---|---|
| 1 | 44-2620 | Chute Bracket | 1 |
| 2 | 44-2610 | Chute Discharge | 1 |

| Ref. No. | Part No. | Description | No. Used |
|---|---|---|---|
| 3 | 3295-29 | Rivet | 6 |
| 4 | 46-6400 | Tab Chute | 1 |

# ENGINE TECUMSEH MODEL TVS100-44012B

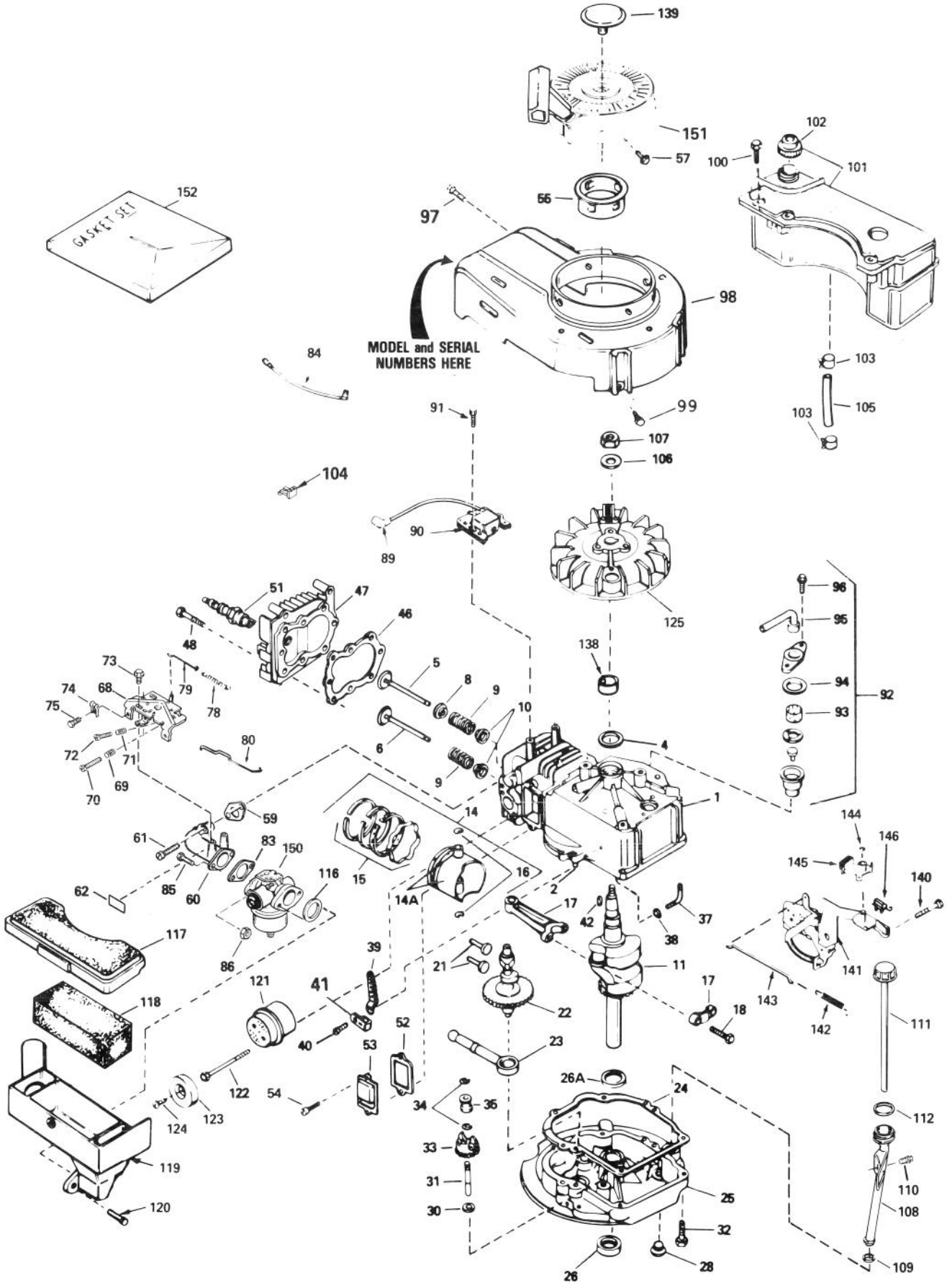

# ENGINE TECUMSEH MODEL TVS100-44012B

| Ref. No. | Part No. | Description | No. Used |
|---|---|---|---|
| 1 | 35010 | Cylinder Assembly (Incl. Ref. #2 & 4) | 1 |
| 2 | 26727 | Pin, Dowel | 2 |
| 4 | 32600 | Seal, Oil | 1 |
| 5 | 29314B | Valve, Intake (Std.) (Incl. Ref. #10) | 1 |
| 5 | 29315C | Valve, Intake (1/32" oversize) (Incl. Ref. #10) | 1 |
| 6 | 29313C | Valve, Exhaust (Std.) (Incl. Ref. #10) | 1 |
| 6 | 29315C | Valve, Exhaust (1/32" oversize) (Incl. Ref. #10) | 1 |
| 8 | 35390 | Seal Assy., Intake valve | 1 |
| 9 | 31672 | Spring, Valve | 2 |
| 10 | 31673 | Cap, Lower valve spring | 2 |
| 11 | 35482 | Crankshaft | 1 |
| 14 | 35544 | Piston, Pin & Ring Assy. (Std.) (Incl. Ref. #14A, 15 & 16) | 1 |
| 14 | 35545 | Piston, Pin & Ring Assy. (.010 oversize) (Incl. Ref. #14A, 15 & 16) | 1 |
| 14 | 35546 | Piston, Pin & Ring Assy. (.020 oversize) (Incl. Ref. #14A, 15 & 16) | 1 |
| 14A | 35541 | Piston & Pin Assy. (Std.) (Incl. Ref. #16) | 1 |
| 14A | 35542 | Piston & Pin Assy. (.010 oversize) (Incl. Ref. #16) | 1 |
| 14A | 35543 | Piston & Pin Assy. (.020 oversize) (Incl. Ref. #16) | 1 |
| 15 | 35547 | Ring Set, Piston (Std.) | 1 |
| 15 | 35548 | Ring Set, Piston (.010 oversize) | 1 |
| 15 | 35549 | Ring Set, Piston (.020 oversize) | 1 |
| 16 | 20381 | Ring, Piston pin retaining | 2 |
| 17 | 30963B | Rod Assy., Connecting (Incl. Ref. #18) | 1 |
| 18 | 32610A | Screw, Connecting rod | 2 |
| 21 | 27241 | Lifter, Valve | 2 |
| 22 | 33553 | Camshaft (Mechanical Compression Release) | 1 |
| 23 | 29914 | Pump Assy., Oil | 1 |
| 24 | *35261 | Gasket, Mounting flange | 1 |
| 25 | 34311B | Flange Assy., Mounting (Incl. Ref. #26, 28 & 31) | 1 |
| 26 | 27897 | Seal, Oil | 1 |
| 26A | 32323 | Washer, Thrust | 1 |
| 28 | 27244 | Plug, Oil drain | 1 |
| 30 | 30590A | Washer, Flat | 1 |
| 31 | 30574 | Shaft, Mechanical governor | 1 |
| 32 | 650488 | Screw, Hex hd. | 6 |
| 33 | 30591 | Gear Assy., Governor (Incl. Ref. #30) | 1 |
| 34 | 29193 | Ring, Retaining | 2 |
| 35 | 30588A | Spool, Governor | 1 |
| 37 | 30589 | Rod, Governor (Incl. Ref. #38) | 1 |
| 38 | 28277 | Washer, Flat | 1 |
| 39 | 31383A | Lever, Governor | 1 |
| 40 | 650548 | Screw, Hex washer hd. | 1 |
| 41 | 31335 | Clamp, Governor lever | 1 |
| 42 | 611004 | Key, Flywheel (Solid State) | 1 |

| Ref. No. | Part No. | Description | No. Used |
|---|---|---|---|
| 46 | *33015 | Gasket, Cylinder head | 1 |
| 47 | 34342 | Head, Cylinder | 1 |
| 48 | 6021A | Screw, Hex flange hd. | 8 |
| 51 | 35395 | Plug, Spark (Champion RJ-19LM or equivalent) | 1 |
| 52 | *27234 | Gasket, Breather | 1 |
| 53 | 32755 | Cover, Valve spring | 1 |
| 54 | 650128 | Screw, Fil. hd. | 2 |
| 55 | 35000 | Hub, Starter | 1 |
| 57 | 650884 | Screw, Hex washer hd. | 2 |
| 59 | *34690 | Gasket, Intake pipe | 1 |
| 60 | 31384A | Pipe, Intake (Incl. Ref. #59) | 1 |
| 61 | 650451 | Screw, Hex hd. | 2 |
| 62 | 34144 | Decal, Primer | 1 |
| 68 | 33131A | Control Assy., Remote speed (Incl. Ref. #69 thru 72) | 1 |
| 69 | 33802 | Spring, Compression | 1 |
| 70 | 650777 | Screw, Fil. hd. | 1 |
| 71 | 31342 | Spring, Compression | 1 |
| 72 | 650549 | Screw, Fil. hd. | 1 |
| 73 | 30200 | Screw, Hex washer hd. self-tap. | 2 |
| 74 | 27793 | Clip, Conduit | 1 |
| 75 | 28942 | Screw, Hex washer hd. | 1 |
| 78 | 31361 | Spring, Governor | 1 |
| 79 | 34337 | Link, Governor spring | 1 |
| 80 | 34336 | Link, Governor-to-throttle | 1 |
| 83 | *26756 | Gasket, Carburetor | 1 |
| 84 | 34961 | Wire, Ground | 1 |
| 85 | 6201 | Screw, Hex hd. | 2 |
| 86 | 29752 | Nut & Lockwasher | 2 |
| 89 | 610118 | Cover, Spark plug | 1 |
| 90 | 34443A | Solid State Assy. | 1 |
| 91 | 650814 | Screw, Hex hd. | 2 |
| 92 | 34214A | Breather Assy. (Incl. Ref. #93 thru 96) | 1 |
| 93 | 33734 | Element, Breather | 1 |
| 94 | *33735 | Gasket, Breather | 1 |
| 95 | 33886 | Tube, Breather | 1 |
| 96 | 30200 | Screw, Hex washer hd. self-tap. | 2 |
| 97 | 30200 | Screw, Hex washer hd. self-tap. | 2 |
| 98 | 35484 | Housing, Blower | 1 |
| 99 | 650831 | Screw, Hex washer hd. Powerlok thread | 2 |
| 100 | 28763 | Screw, Hex washer hd. | 3 |
| 101 | 34476 | Tank Assy., Fuel (Incl. Ref. #102) | 1 |
| 102 | 33032 | Cap, Fuel tank | 1 |
| 103 | 26460 | Clamp, Fuel line | 2 |
| 104 | 29443 | Clip, Fuel line | 1 |
| 105 | 30705 | Line, Fuel | 1 |
| 106 | 650815 | Washer, Belleville | 1 |
| 107 | 650816 | Nut, Flywheel | 1 |
| 108 | 35577 | Tube, Oil fill | 1 |
| 109 | 34265 | Gasket, Oil fill tube | 1 |
| 110 | 650562 | Screw, Hex washer hd. | 1 |
| 111 | 35578 | Dipstick, Oil | 1 |
| 112 | 35499 | "O" Ring | 1 |
| 116 | *34338 | Gasket, Air cleaner | 1 |
| 117 | 34341A | Cover, Air cleaner | 1 |
| 118 | 34340 | Element, Air cleaner | 1 |
| 119 | 34858 | Body, Air cleaner | 1 |

*Indicates parts included in Gasket Set, Ref. #152.

# ENGINE TECUMSEH MODEL TVS100-44012B (Continued)

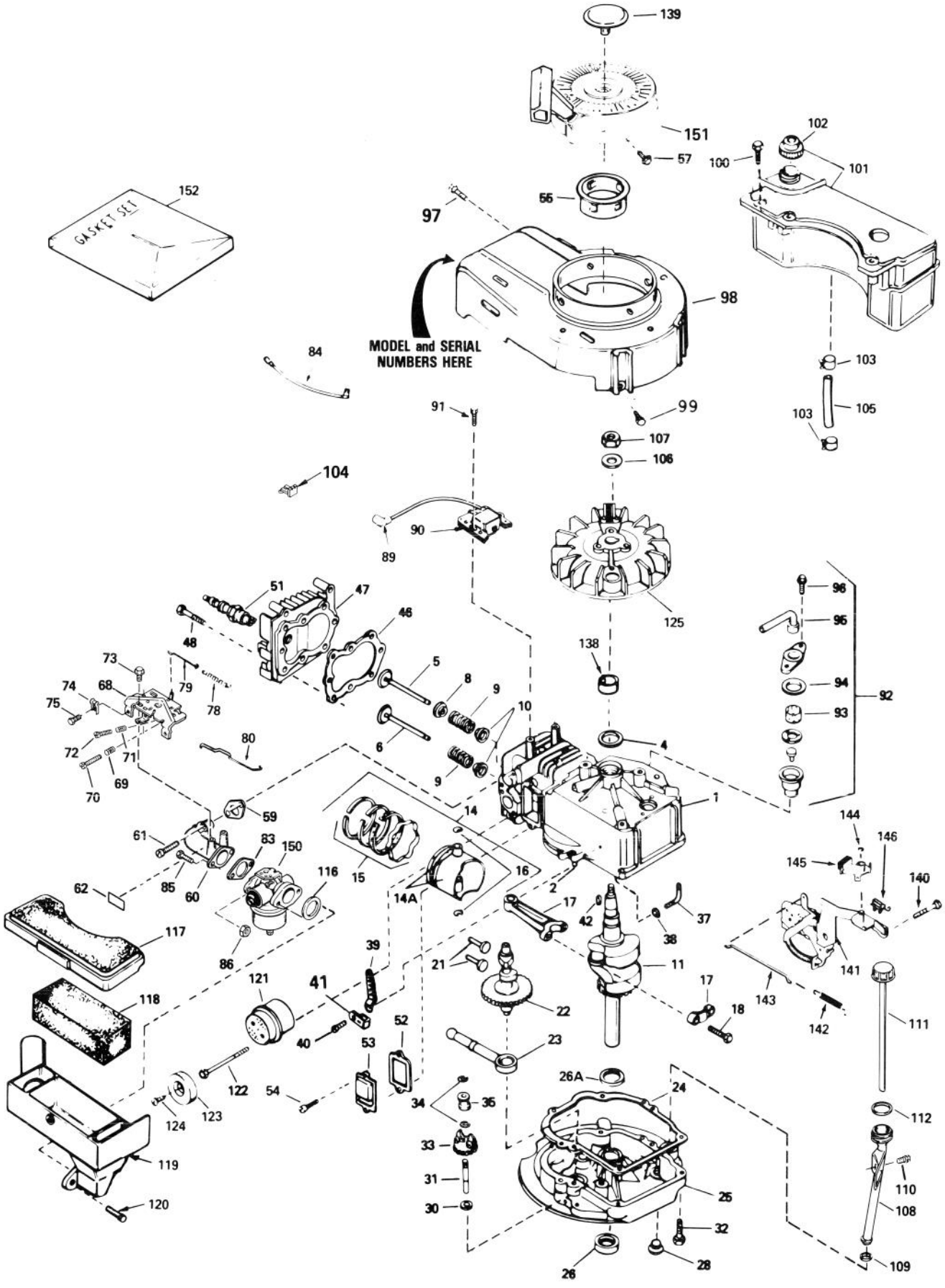

# ENGINE TECUMSEH MODEL TVS100-44012B (Continued)

| Ref. No. | Part No. | Description | No. Used |
|---|---|---|---|
| 120 | 650806 | Screw, Hex washer hd. shoulder | 2 |
| 121 | 27181B | Muffler (Incl. Ref. #122) | 1 |
| 122 | 650795 | Screw, Hex hd. | 2 |
| 123 | 32431 | Cover, Muffler | 1 |
| 124 | 650760 | Screw, Pan hd. | 1 |
| 125 | 611046A | Flywheel | 1 |
| 138 | 34080 | Spacer, Flywheel key | 1 |
| 139 | 35392 | Plug, Starter | 1 |
| 140 | 650839 | Screw, Hex hd. self-tap. | 2 |

| Ref. No. | Part No. | Description | No. Used |
|---|---|---|---|
| 141 | 35015A | Bracket Assy., Brake | 1 |
| 142 | 34965 | Spring, Extension | 1 |
| 143 | 34966 | Link, Control | 1 |
| 144 | 32309 | Ring, Retaining | 1 |
| 145 | 34968 | Lever, Brake | 1 |
| 146 | 610973 | Terminal Assy. | 1 |
| 150 | 632098 | Carburetor (Incl. Ref. #83) | 1 |
| 151 | 590621 | Starter, Rewind | 1 |
| 152 | 33238C | Gasket Set (Incl. items marked *) | 1 |

*Indicates parts included in Gasket Set, Ref. #152.

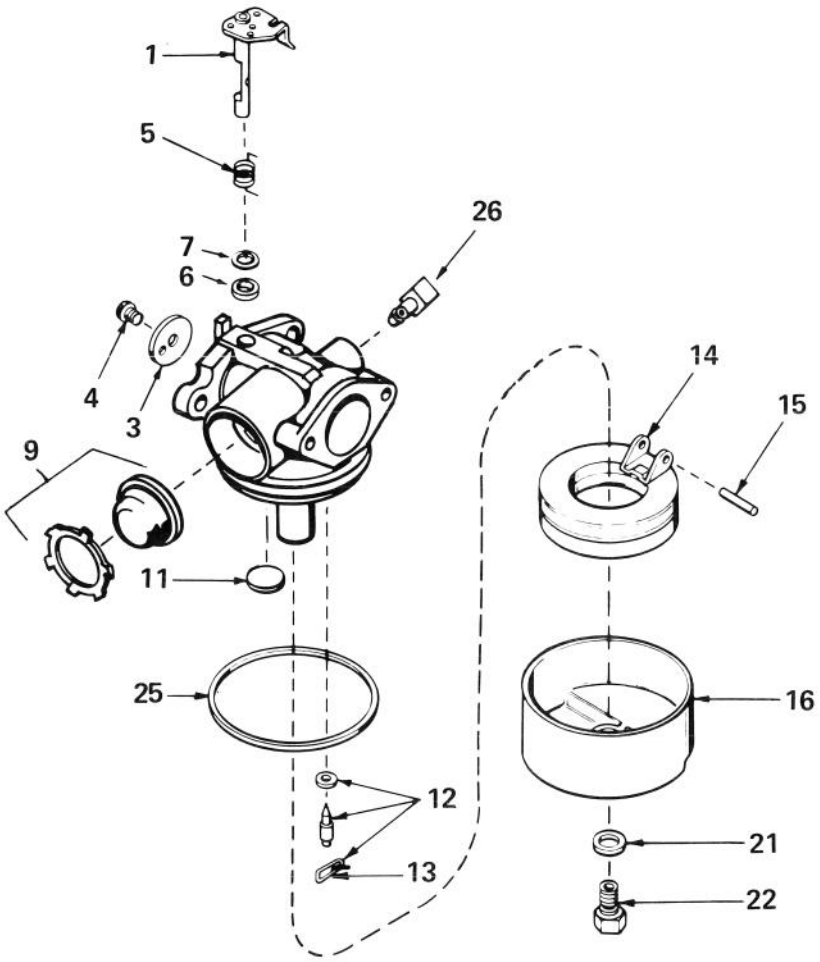


# CARBURETOR NO. 632098

| Ref. No. | Part No. | Description | No. Used |
|---|---|---|---|
| 1 | 631615 | Shaft & Lever Assy., Throttle | 1 |
| 3 | 631616 | Shutter, Throttle | 1 |
| 4 | 650506 | Screw, Throttle shutter | 1 |
| 5 | 631767 | Spring, Throttle return | 1 |
| 6 | 631971 | Seal, Dust | 1 |
| 7 | 631184 | Washer, Flat | 1 |
| 9 | 632047 | Primer Assy. | 1 |
| 11 | 631027 | Plug, Welch | 1 |
| 12 | 631021 | Inlet Needle, Seat & Clip Assy. (Incl. Ref. #13) | 1 |

| Ref. No. | Part No. | Description | No. Used |
|---|---|---|---|
| 13 | 631022 | Clip, Inlet needle | 1 |
| 14 | 632019 | Float, Carburetor | 1 |
| 15 | 631024 | Shaft, Float | 1 |
| 16 | 631700 | Bowl, Float | 1 |
| 21 | 631334 | Gasket, Bowl-to-body | 1 |
| 22 | 631937 | Nut, Float bowl | 1 |
| 25 | 631028 | Gasket, Bowl-to-body | 1 |
| 26 | 631807 | Fitting, Fuel inlet | 1 |

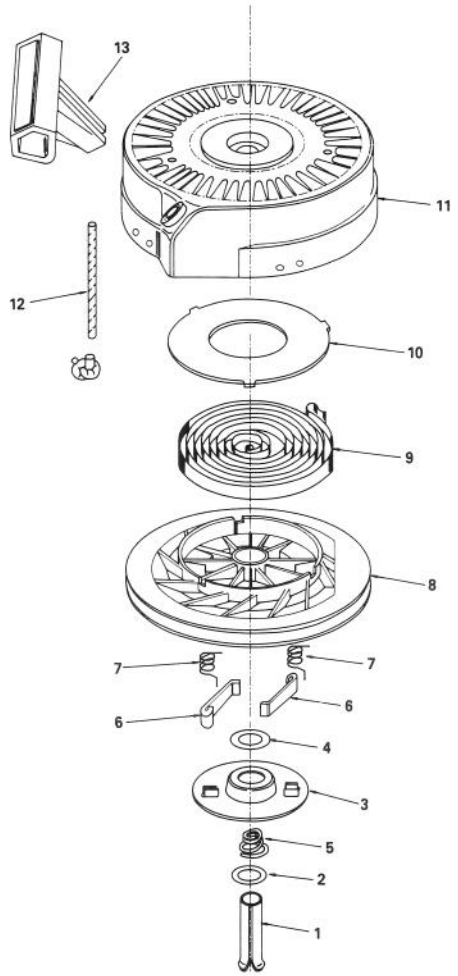


# REWIND STARTER NO. 590621

| Ref. No. | Part No. | Description | No. Used |
|---|---|---|---|
| 1 | 590599A | Pin, Spring (Incl. Ref. #4) | 1 |
| 2 | 590600 | Washer | 1 |
| 3 | 590615 | Retainer | 1 |
| 4 | 590601 | Washer | 1 |
| 5 | 590598 | Spring, Brake | 1 |
| 6 | 590616 | Dog, Starter | 2 |
| 7 | 590617 | Spring, Dog | 2 |

| Ref. No. | Part No. | Description | No. Used |
|---|---|---|---|
| 8 | 590618 | Pulley | 1 |
| 9 | 590619 | Spring, Rewind | 1 |
| 10 | 590620 | Cover, Spring | 1 |
| 11 | 590622 | Housing Assy., Starter | 1 |
| 12 | 590535 | Rope, Starter (Length 98" & 9/64" dia.) | 1 |
| 13 | 590452 | Handle, Starter | 1 |

# MAINTENANCE RECORD

| Date | | | | | | | | |
|---|---|---|---|---|---|---|---|---|
| | | | | | | | | |
| | | | | | | | | |
| | | | | | | | | |
| | | | | | | | | |
| | | | | | | | | |
| | | | | | | | | |
| | | | | | | | | |
| | | | | | | | | |
| | | | | | | | | |
| | | | | | | | | |
| | | | | | | | | |
| | | | | | | | | |
| | | | | | | | | |
| | | | | | | | | |
| | | | | | | | | |
| | | | | | | | | |
| | | | | | | | | |
| | | | | | | | | |
| | | | | | | | | |
| | | | | | | | | |
| | | | | | | | | |
| | | | | | | | | |
| | | | | | | | | |
| | | | | | | | | |
| | | | | | | | | |
| | | | | | | | | |
| | | | | | | | | |
| | | | | | | | | |
| | | | | | | | | |
| | | | | | | | | |
| | | | | | | | | |
| | | | | | | | | |