Form Number 3354-522 Rev A

Light Kit
Z400 and Z500 Series Z Master® Mowers

Model No. 107-9880

Parts Catalog

Ordering Replacement Parts
To order replacement parts, please supply the part number, the quantity, and the description of each part desired.

Understanding Reference Numbers
Each Identified part in an illustration has a reference number. The reference number for a part also appears in the parts list, along with other information about the part.

This catalog uses two special reference number formats, one to indicate parts in a service assembly and another to indicate the quantity of a given part in an illustration.

Service Assembly Reference Numbers
Parts in service assemblies have reference numbers in the form a:b. The a represents the reference number of the entire service assembly and the b represents a sequential number unique to each part within the service assembly.

For example, a wheel assembly might be identified by reference number 6, the tire by 6:1, the valve by 6:2, and the wheel by 6:3. When you order the assembly identified by reference number 6, you receive all parts identified by reference numbers 6:1, 6:2, and 6:3. However, you may also order any part individually. Reference numbers of this type appear in illustrations and in part lists.

Reference Numbers Indicating Quantity
In an illustration, if a reference number indicates more than one part, the reference number has the form nX y. The n represents the quantity of the part, the X is the multiplication symbol, and the y represents the reference number.

For example, in an illustration, the reference number 2X 37 means that two of the parts identified by reference number 37 are indicated.

© The Toro Company - 2005
All Rights Reserved

Register your product at www.Toro.com

Light Kit Assembly

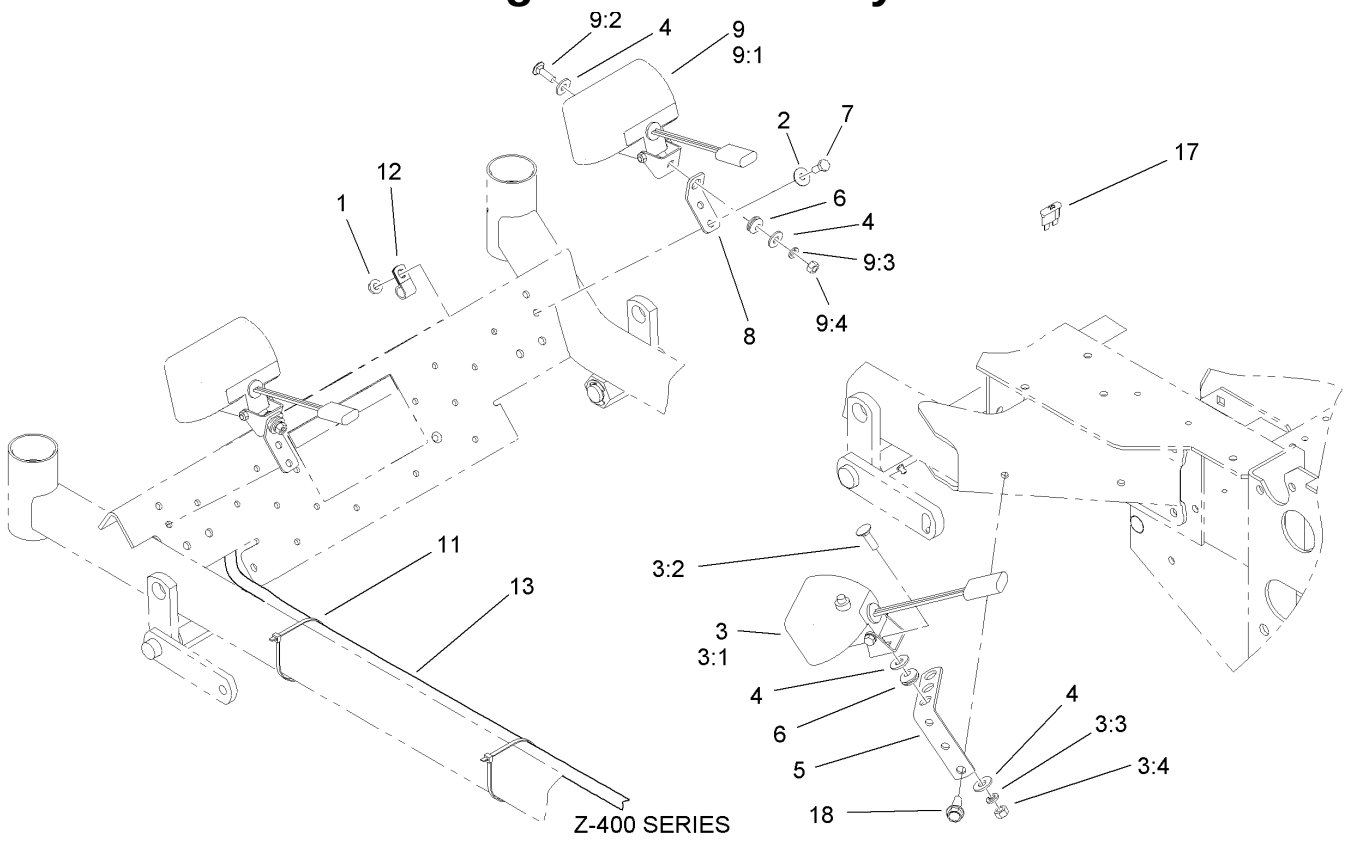

Z-400 SERIES

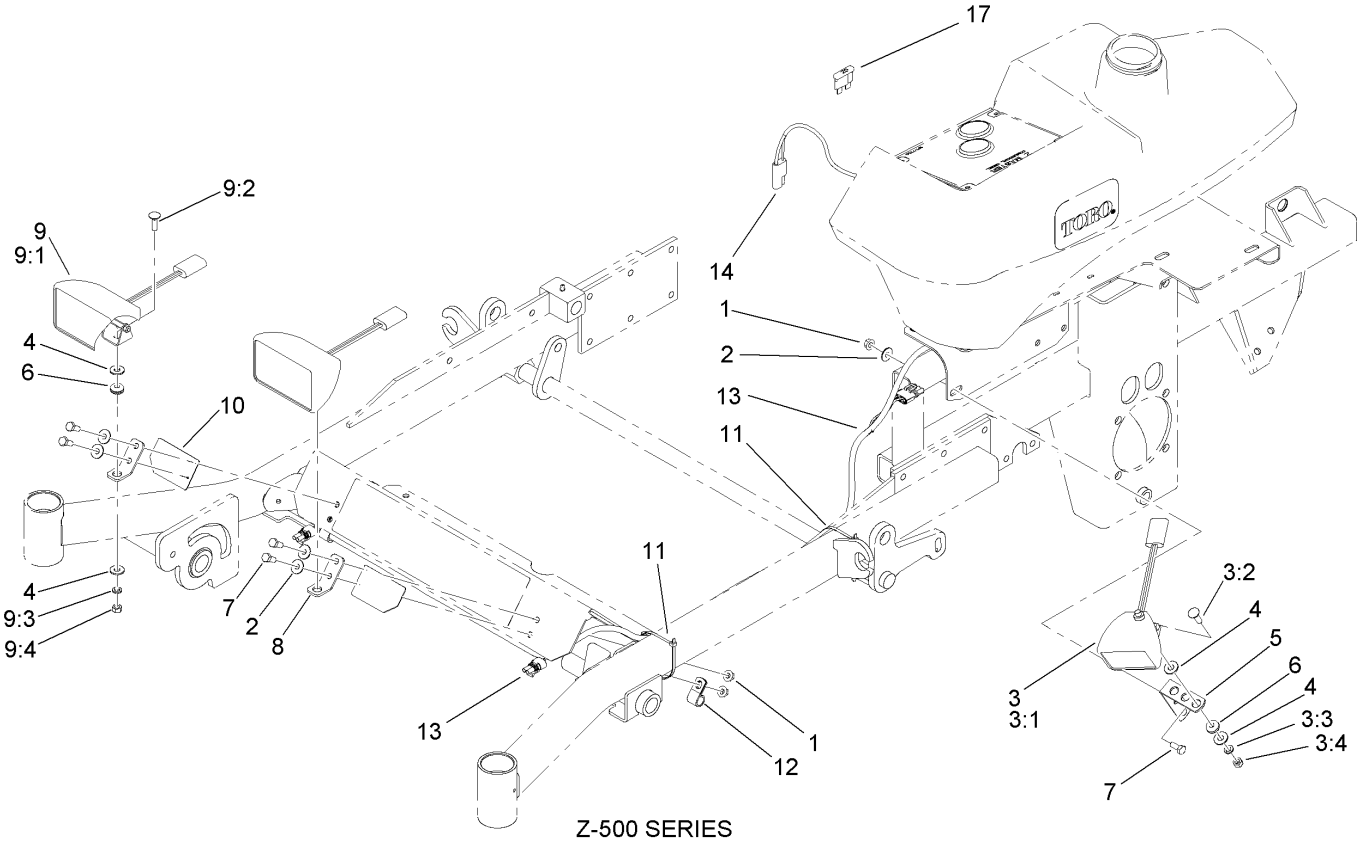

Z-500 SERIES

Light Kit Assembly

Ref	Part No.	Qty.	Description
1	32128-20	5	Nut-HF
2	3290-456	5	Washer-Belleville
3	94-9023	1	Lamp W/Switch
3:1	95-0909	1	Lamp-12 Volt
3:2	3230-28	1	Screw-CARR
3:3	3253-33	1	Washer-Lock
3:4	3217-6	1	Nut-Hex
4	3256-3	6	Washer-Flat
5	110-0315	1	Bracket
6	237-141	3	Grommet-Rubber
7	322-3	5	Screw-HH
8	107-9881-03	2	Bracket-Mount, Light
9	94-9024	2	Lamp-Standard
9:1	95-0909	1	Lamp-12 Volt
9:2	3230-28	1	Screw-CARR
9:3	3253-33	1	Washer-Lock
9:4	3217-6	1	Nut-Hex
10	107-9883	1	Template-Drill, Footrest
11	3290-379	2	Tie-Cable
12	1-603727	2	Clip-Loom
13	107-8060	1	Harness-Electrical
14	107-8062	1	Harness-Electrical, Diesel Adapter
17	109101	1	Fuse-20 Amp
18	32104-6	1	Screw-HH


TORO®