FORM NO. 3313-580

TORO®

MODEL NO. 20631-8000001 & UP

PARTS CATALOG

21" S.P. REAR BAGGER

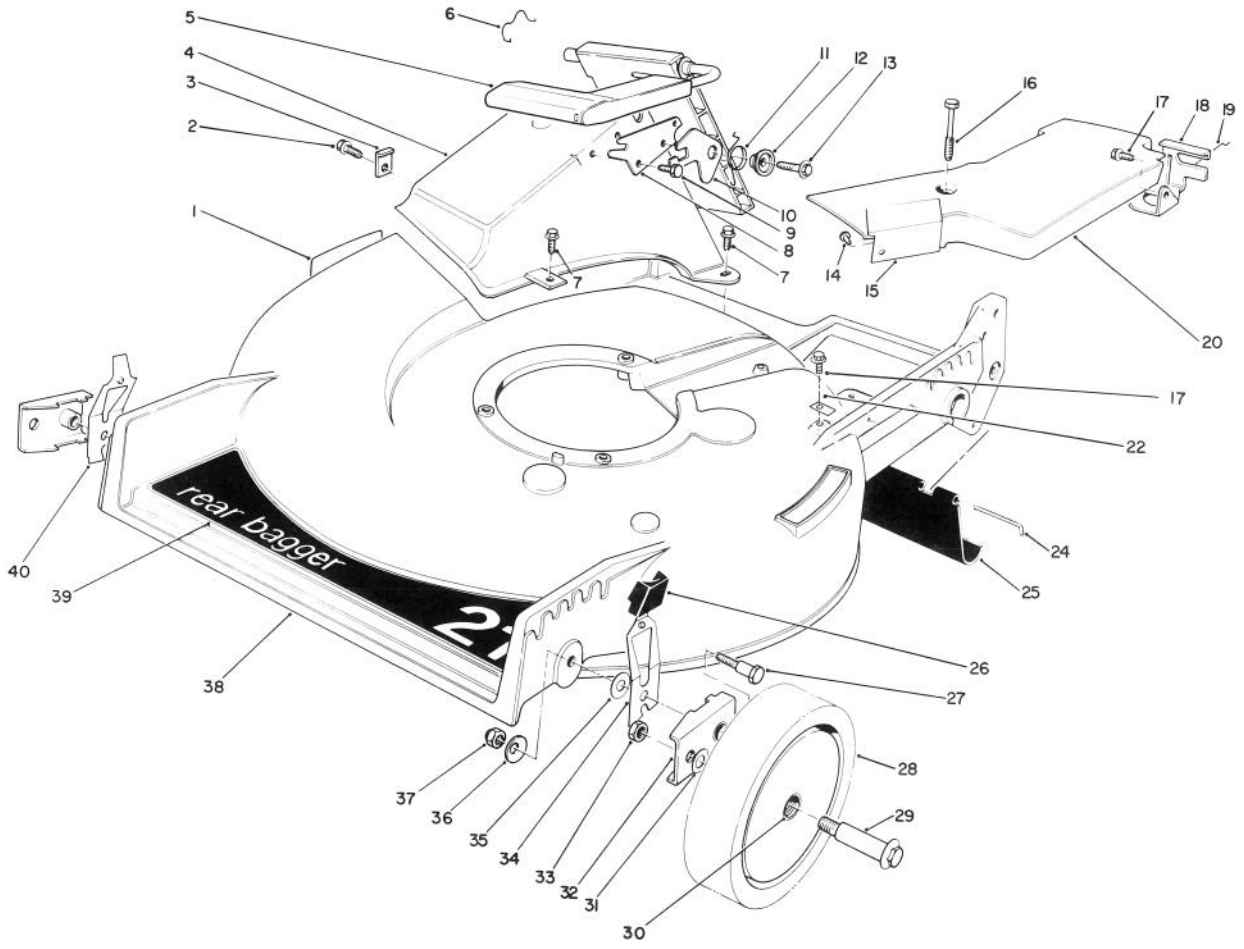

HOUSING ASSEMBLY

Ref. No.	Part No.	Description	No. Used
1	39-5770	Decal — Danger	1
2	12-3270	Screw — Thread Forming Hex. Washer Hd.	1
3	47-6540	Clip — Tunnel	1
4	13-3369	Tunnel — Discharge (Incl. Ref. #1)	1
5	51-0200	Discharge Door Assembly	1
6	47-5840	Retainer — Door	1
7	46-6811	Screw w/Washer	3
8	23-1040	Plate — Latch	1
9	46-8090	Screw — Self Tapping Hex. Washer Hd.	1
10	42-4010	Latch — Door	1
11	33-4860	Spring — Torsion	1
12	43-4840	Spacer — Latch	1
13	46-8091	Screw — Self Tapping Hex. Washer Hd.	1

Ref. No.	Part No.	Description	No. Used
14	3295-35	Rivet	2
15	38-8730	Shield — Heat	1
16	37-7260	Capscrew — Special	2
17	32144-70	Screw — Thread Forming Hex. Washer Hd.	1
18	62-3940	Bracket — Traction Adjustment	1
19	46-7030	Retainer — Cable	1
20	52-7402	Belt Cover Assembly (Incl. Ref. #14 & 15)	1
22	62-3720	Clamp Cable	1
24	33-3208	Rod — Shield	1
25	44-0580	Shield — Rear	1

©The Toro Company — 1988

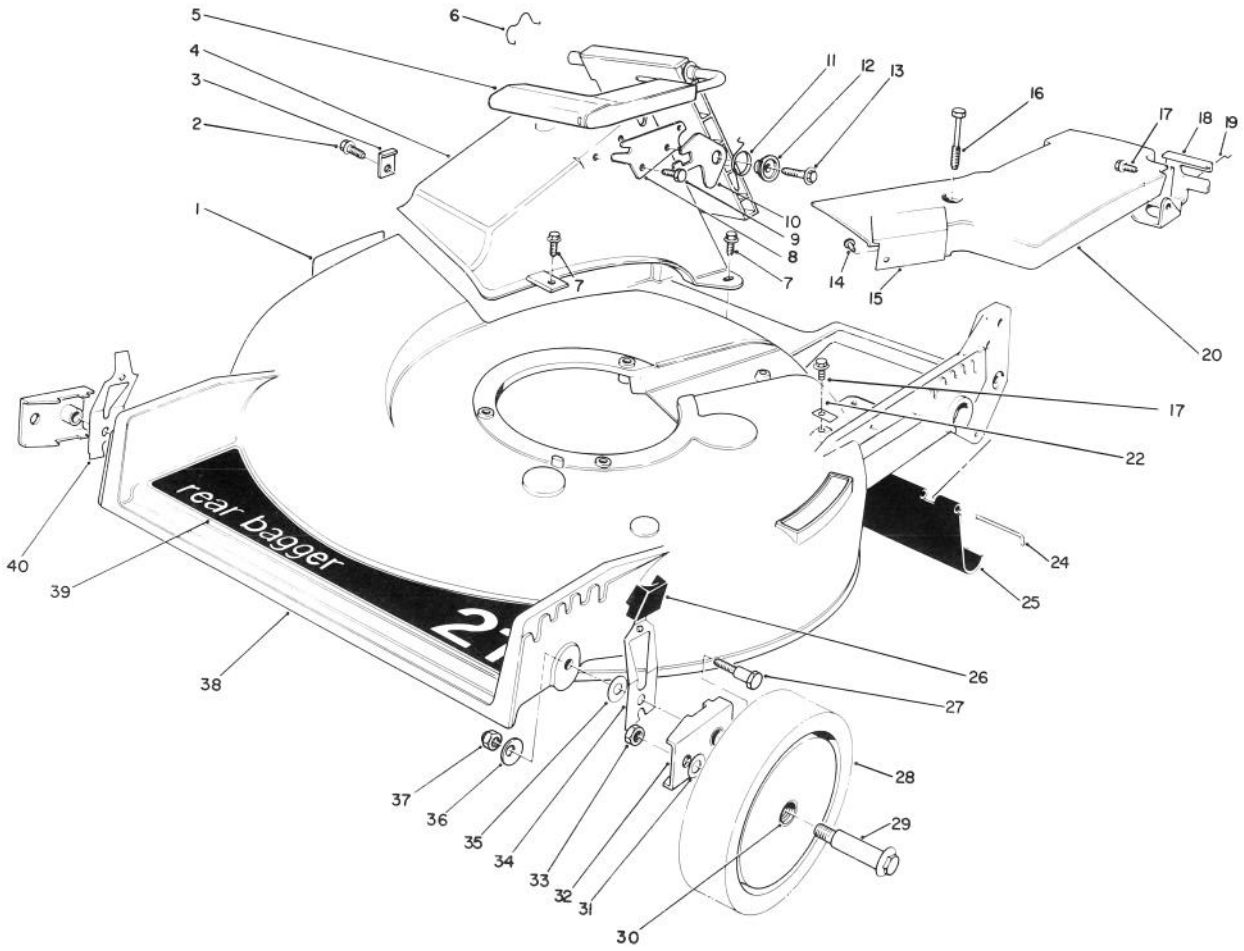

HOUSING ASSEMBLY (Continued)

Ref. No.	Part No.	Description	No. Used
26	25-7740	Knob — Spring Arm	2
27	44-5270	Screw — Pivot	2
28	11-9509	Wheel & Tire Assembly (Incl. Ref. #30)	2
29	27-6230	Bolt — Wheel	2
30	27-6250	Bushing	4
31	40-1940	Washer — Wheel	2
32	47-2940	Arm — Pivot	2

Ref. No.	Part No.	Description	No. Used
33	52-3620	Nut — Lock	2
34	52-7480	Spring Arm Assembly — L.H.	1
35	5-4460	Washer — Pivot	2
36	3290-456	Washer — Bellville	2
37	3296-29	Nut — Lock	2
38	12-4299	Housing (Incl. Ref. #1)	1
39	44-0450	Decal — 21″ Rear Bagger	1
40	52-7490	Spring Arm Assembly — R.H.	1

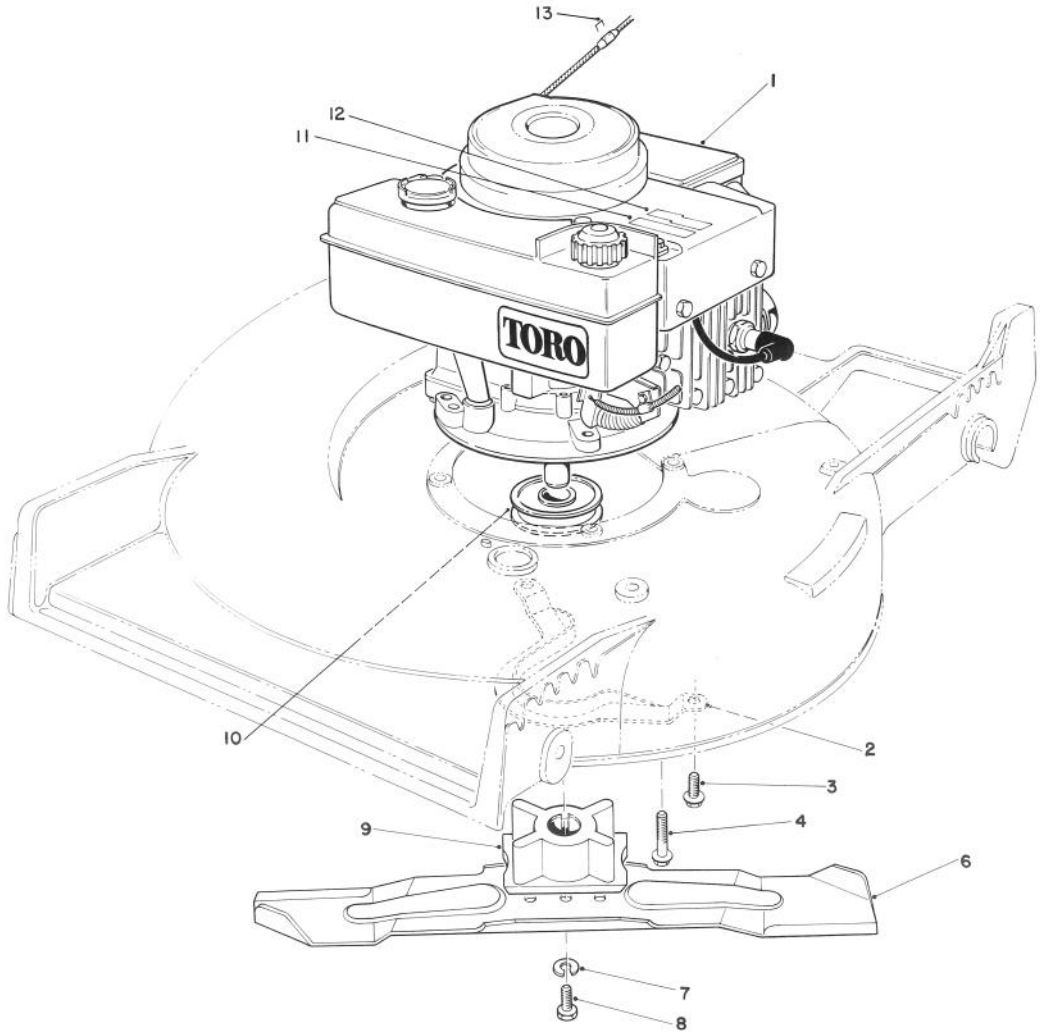

ENGINE ASSEMBLY

Ref. No.	Part No.	Description	No. Used
1		Engine	1
2	40-5720	Guide — Belt	1
3	49-2040	Screw — Thread Forming	2
4	11-0581	Screw — Thread Forming	3
6	42-1000	Blade — 21″	1

Ref. No.	Part No.	Description	No. Used
7	3253-22	Lockwasher	1
8	26-0670	Screw — Blade	1
9	62-7540	Retainer — Blade	1
10	62-7550	Pulley — Driver	1
11	68-7340	Decal — Features	1
12	67-9780	Decal — Engine	1
13†		Staple	1

†Obtain Locally

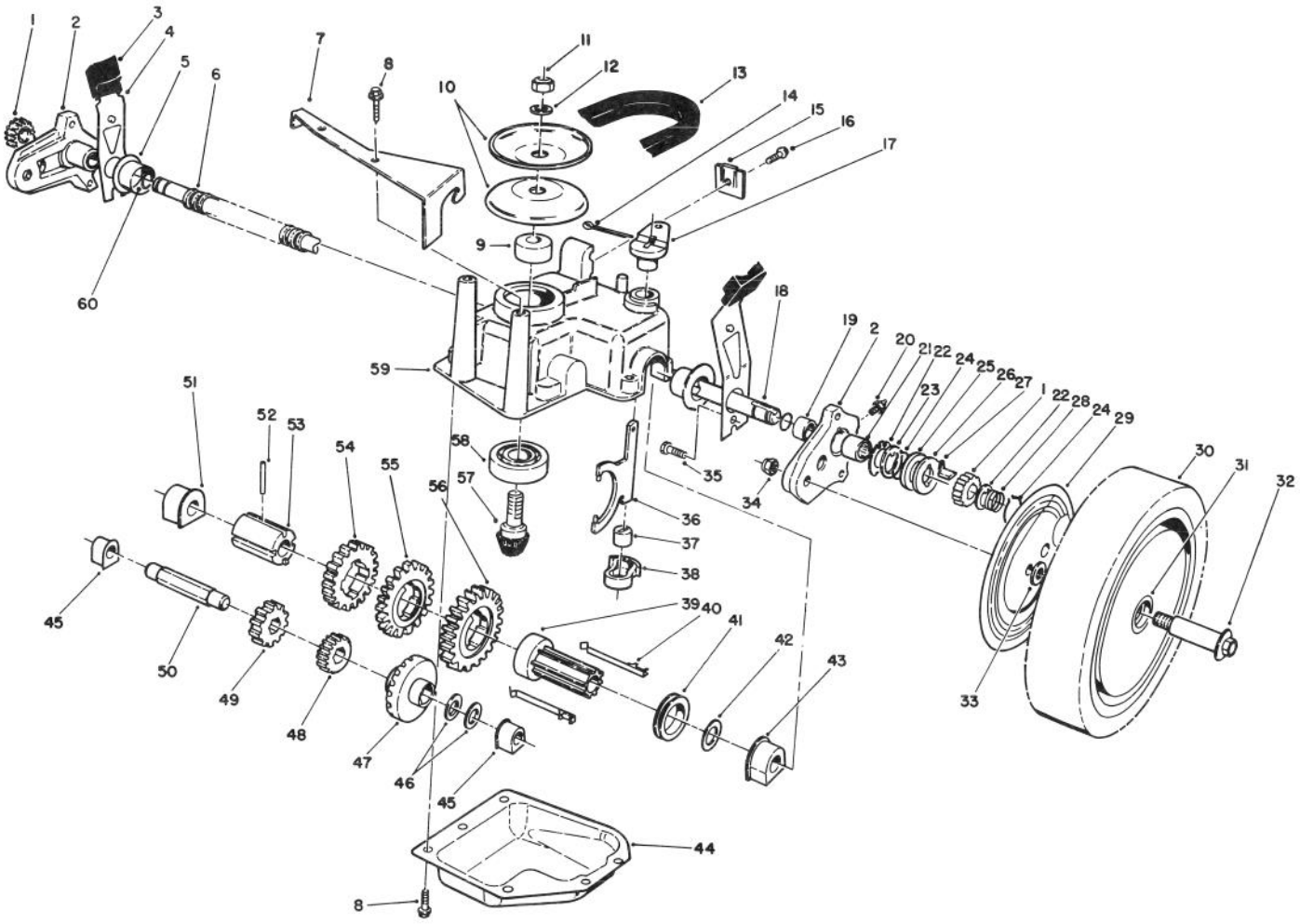

GEAR CASE ASSEMBLY

Ref. No.	Part No.	Description	No. Used
1	65-4750	Pinion	2
2	63-8700	Pivot Arm Assembly (Incl. Ref. #19, 20, 21)	2
3	25-7740	Knob — Arm	2
4	63-8720	Spring Arm Assembly	2
5	42-3520	End Cap	2
6	24-7922	Cover — Drive Shaft	1
7	62-4320	Bracket — Belt Guide	1
8	49-2040	Screw — Self Tapping	8
9	62-6660	Spacer	1
10	60-8840	Pulley — Half	2
11	3296-5	Nut — Lock	1
12	3256-24	Washer — Flat	1
13	62-3900	V-Belt	1
14	3272-10	Pin — Cotter	1
15	46-5610	Cable Clamp	1
16	32144-70	Screw — Thread Forming	1
17	60-8820	Lever — Shift	1
18	65-4770	Shaft — Output	1
19	47-2890	Bushing	2
20	302-56	Fitting — Grease	2
21	48-2060	Needle Bearing	2

Ref. No.	Part No.	Description	No. Used
22	65-4730	Thrust Washer, Inner	2
23	65-4740	Thrust Washer, Inner	4
24	65-2720	Retaining Ring	4
25	65-4710	Friction Ring	2
26	65-4760	Washer — Clutch	2
27	66-6050	Key — Rocker L.H.	1
*	66-6040	Key — Rocker R.H.	1
28	65-4720	Spring	2
29	63-5270	Cover — Wheel	2
30	51-2740	Wheel — Tire & Gear Assy. (Incl. Ref. #31)	2
31	27-2650	Bushing — Wheel	4
32	27-6231	Wheel Bolt	2
33	40-1940	Washer — Wheel Bolt	4
34	52-3620	Nut — Lock	2
35	32144-85	Screw	2
36	60-8870	Yoke — Shift	1
37	29-9570	Bushing — Yoke	1
38	60-8810	Retainer — Shift Fork	1
39	60-8780	Sleeve — Shift Key	1
40	60-8740	Key — Shift	2
41	60-8760	Collar — Shift	1

* Not Illustrated

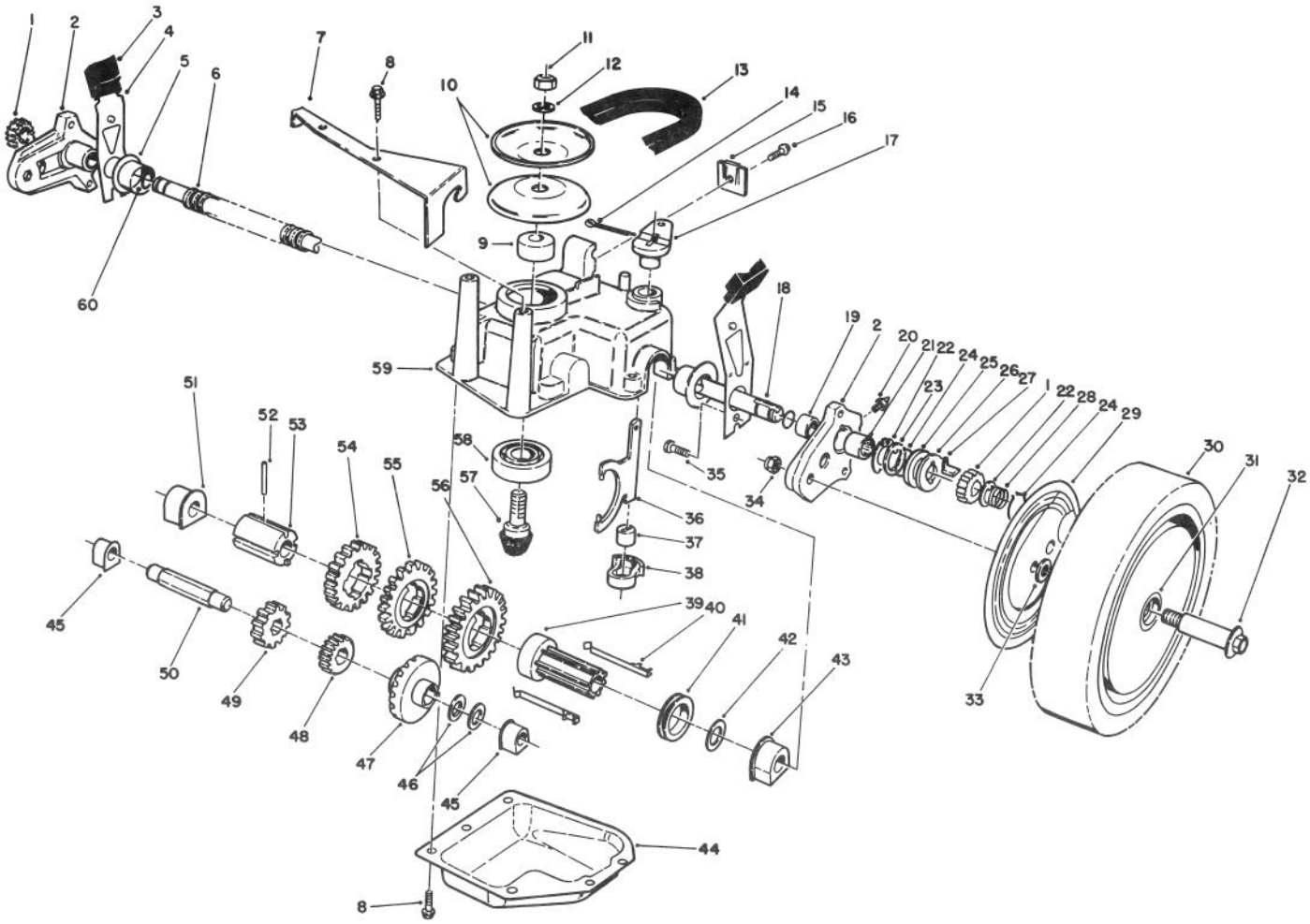

GEAR CASE ASSEMBLY (Continued)

Ref. No.	Part No.	Description	No. Used
42	36-4780	Washer — Thrust	1
43	60-8770	Bushing — Output Shaft	1
44	60-8730	Cover — Gear Case	1
45	60-8750	Bushing — Int. Shaft	2
46	36-4791	Washer — Thrust	2
47	55-3760	Gear — Pinion 15 Tooth	1
48	55-3780	Gear — Pinion 20 Tooth	1
49	55-3800	Gear — Pinion	1
50	60-8800	Shaft — Intermediate	1
51	60-8850	Bushing — Output Shaft	1
52	32121-120	Pin — Coil	1

Ref. No.	Part No.	Description	No. Used
53	60-8790	Sleeve — Gear	1
54	55-3810	Gear — 39 Tooth	1
55	55-3790	Gear — 44 Tooth	1
56	55-3770	Gear — 49 Tooth	1
57	60-8890	Pinion — Bevel	1
58	38-7820	Bearing — Ball	1
59	60-8710	Case — Gear Upper	1
60	237-153	O-Ring	2
*	62-6672	Gear Case Assembly Complete	1

* Not Illustrated

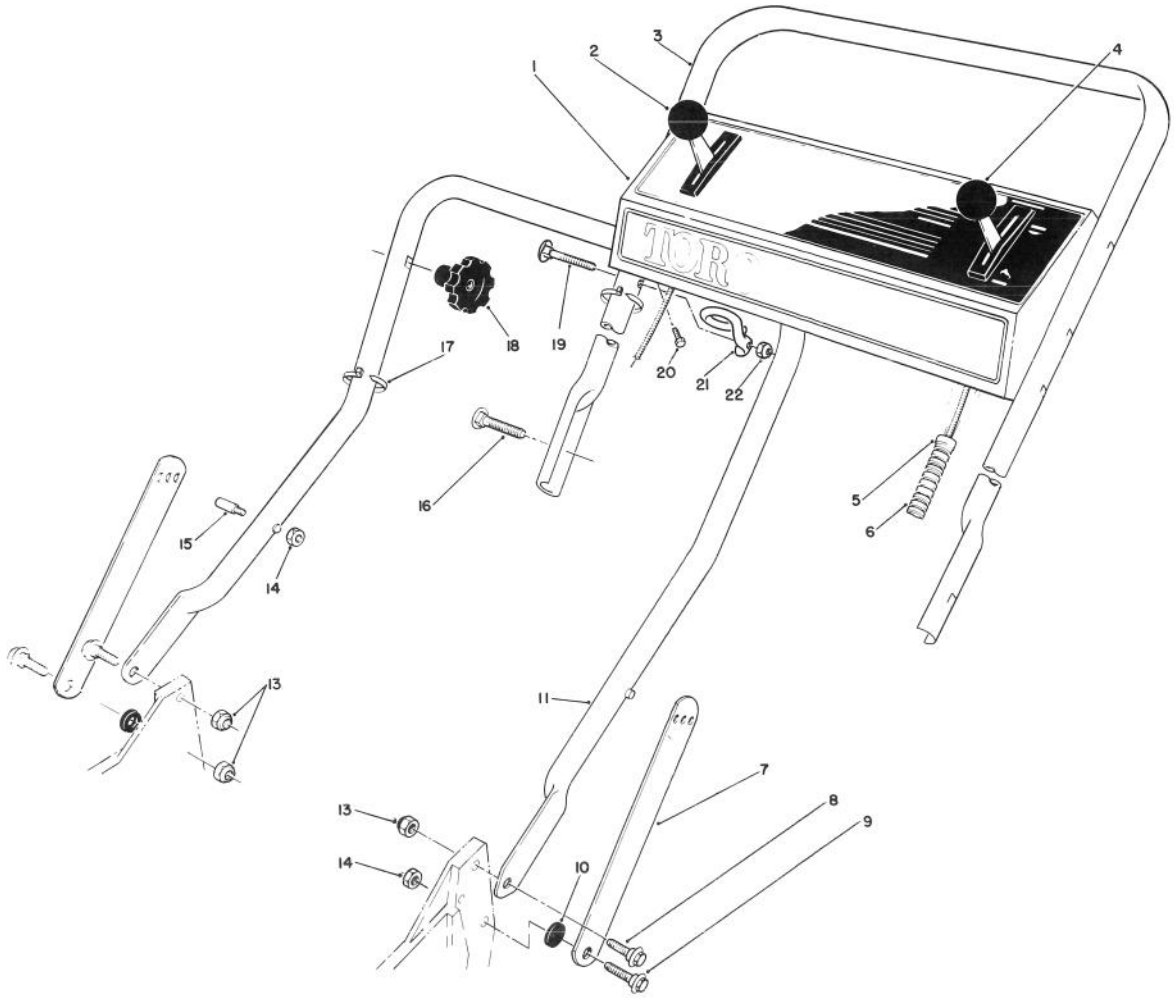

HANDLE ASSEMBLY

Ref. No.	Part No.	Description	No. Used
1	61-8660	Panel — Control	1
2	46-5430	Control — Ground Speed (Bend Type #1) (Sheath Lg. 42¼ inch) (Wire Lg. 2¼ inch)	1
3	49-4234	Handle — Upper	1
4	46-5447	Control — Throttle (Bend Type #1) (Sheath Lg. 55½ ") (Wire Lg. 2")	1
5	2412-50	Clip — Convoluted Tubing	4
6	46-6440	Cover — Control Cables	1
7	43-1370	Latch — Handle	2
8	27-7211	Screw — Shoulder	2

Ref. No.	Part No.	Description	No. Used
9	27-7210	Screw — Shoulder	2
10	3-3287	Spacer	2
11	43-1361	Lower Handle Assembly	1
13	3296-29	Locknut	3
14	3296-47	Locknut	3
15	49-2750	Pin — Handle	2
16	17-9421	Screw — Handle	2
17	3290-378	Cable Tie	2
18	19-4050	Knob — Handle Release	2
19	46-6433	Screw — Handle	1
20	32104-76	Screw — Self Tap Slotted	5
21	46-8080	Guide — Rope	1
22	3296-42	Locknut	1

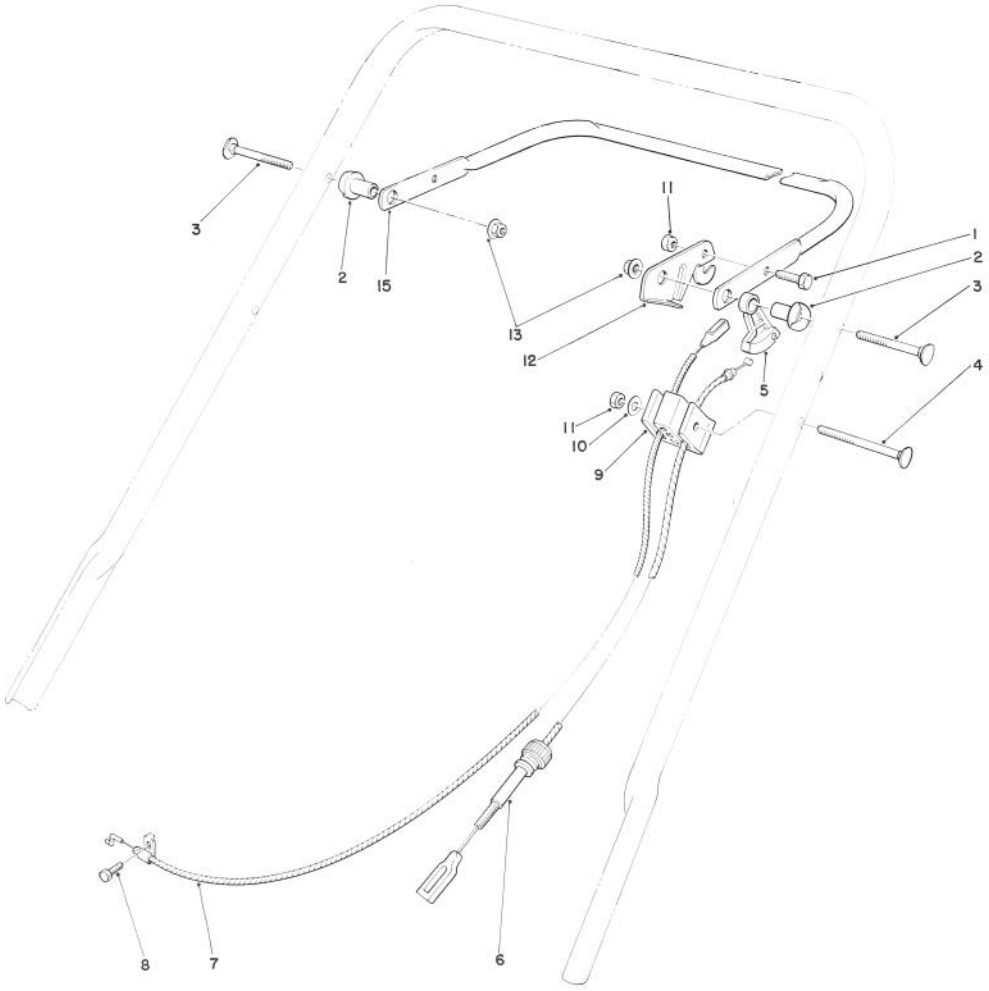

TRACTION CONTROL ASSEMBLY

Ref. No.	Part No.	Description	No. Used
1	321-3	Capscrew	2
2	49-1630	Support — Spacer	2
3	17-9421	Screw — Handle	2
4	46-6434	Screw — Handle	1
5	46-5520	Lever — Traction	1
6	46-5481	Cable — Traction	1
7	46-8011	Cable — Brake	1
8	2210-250	Capscrew	1

Ref. No.	Part No.	Description	No. Used
9	46-6980	Support — Cable	1
10	3256-22	Washer — Flat	1
11	3296-42	Locknut	2
12	66-5350	Lever — Control	1
13	3296-58	Locknut	2
15	62-3810	Bar — Control	1

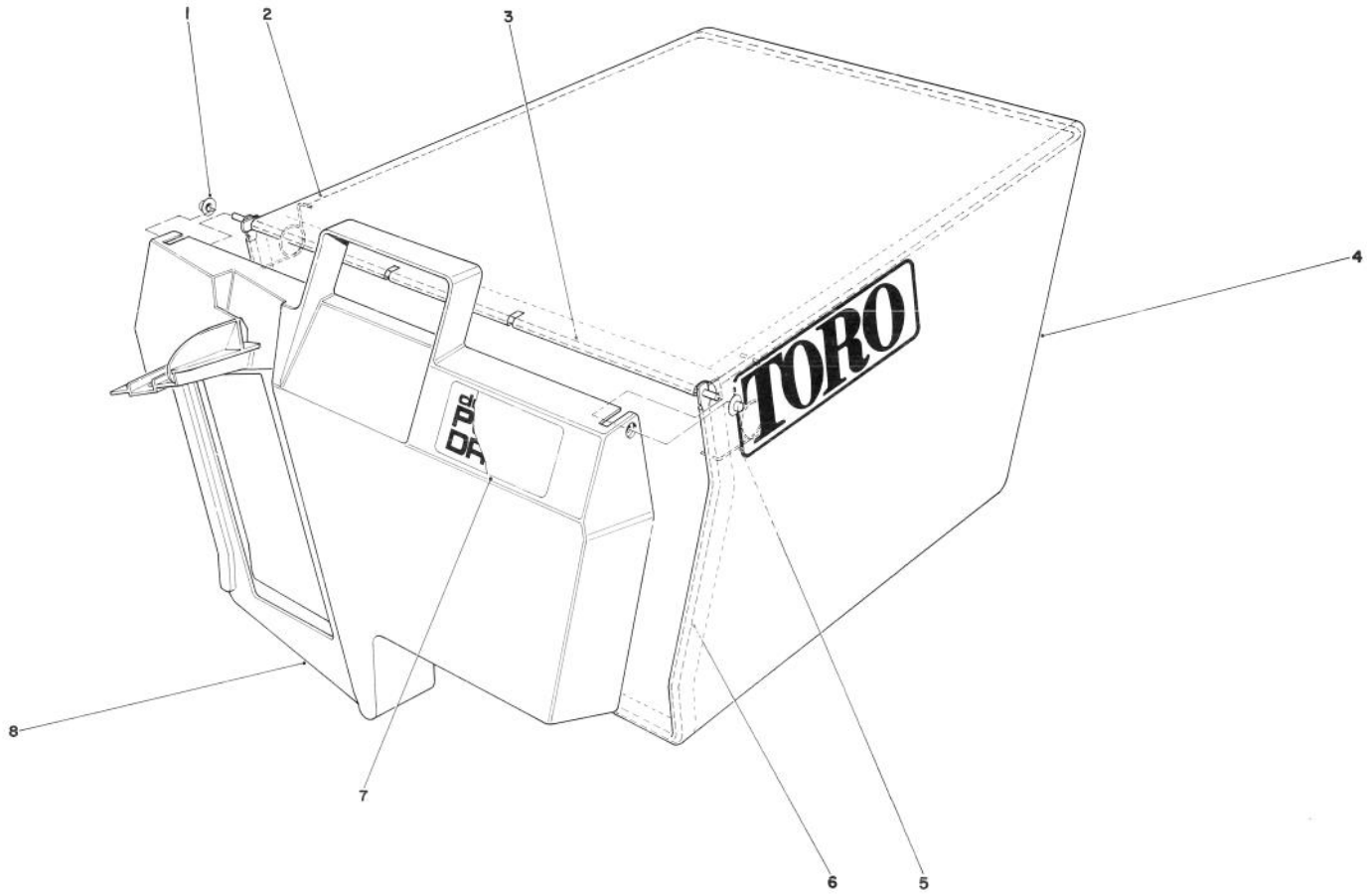

GRASS BAG ASSEMBLY NO. 11-0189

Ref. No.	Part No.	Description	No. Used
1	3290-422	Push Nut	2
2	42-4030	Bag Frame Upper	1
3	33-4820	Hinge Bag Door	1
4	8-2759	Grass Bag	1

Ref. No.	Part No.	Description	No. Used
5	36-6910	Spring	2
6	42-4020	Frame Bag	1
7	40-2240	Decal — Bag Door	1
8	37-1392	Door Grass Bag	1

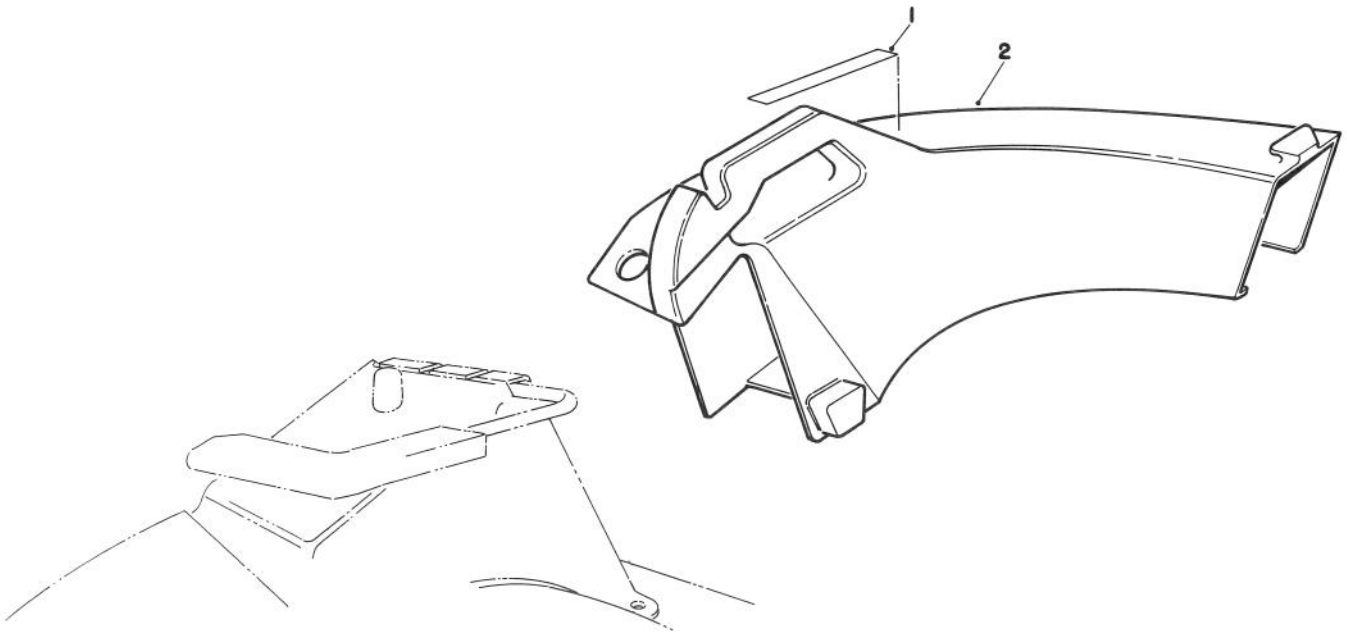

SIDE DISCHARGE CHUTE MODEL NO. 59168(Optional)

Ref. No.	Part No.	Description	No. Used
1	39-9120	Decal — Caution	1

Ref. No.	Part No.	Description	No. Used
2	13-2239	Chute Discharge (Incl. Ref. #1)	1

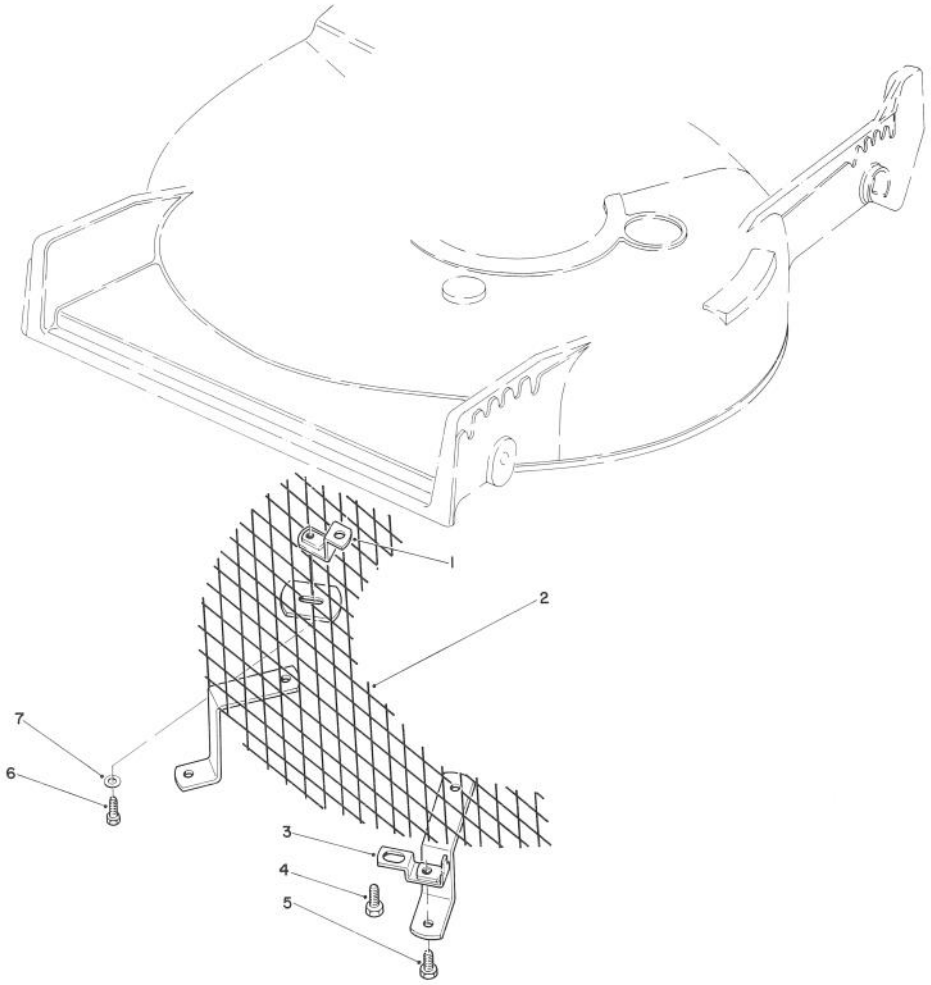

LEAF SHREDDER KIT MODEL NO. 59157 (Optional)

Ref. No.	Part No.	Description	No. Used
1	47-6260	Bracket	1
2	47-6230	Screen	1
3	46-4880	Mounting Bracket	2
4	32144-11	Screw — Self Tapping	3

Ref. No.	Part No.	Description	No. Used
5	321-3	Capscrew — Hex Hd.	2
6	321-5	Capscrew — Hex Hd.	1
7	3256-1	Washer	1

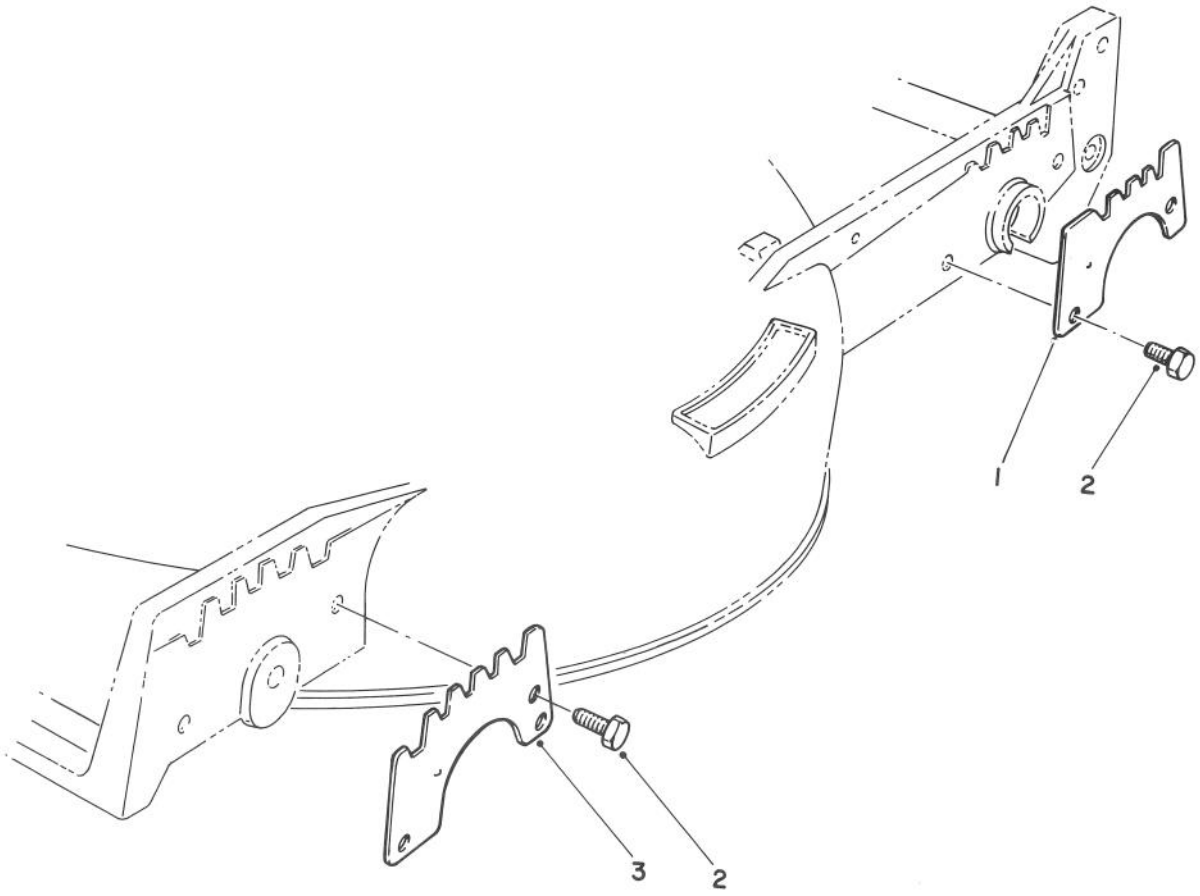

WEAR PLATE KIT NO. 49-4080 (Optional)

Ref. No.	Part No.	Description	No. Used
1	49-4070	Plate — Wear, Rear	2
2	32104-17	Screw — Thread Forming	8

Ref. No.	Part No.	Description	No. Used
3	43-5050	Plate — Wear, Front	2

ENGINE TECUMSEH MODEL NO. TVS105-53108F

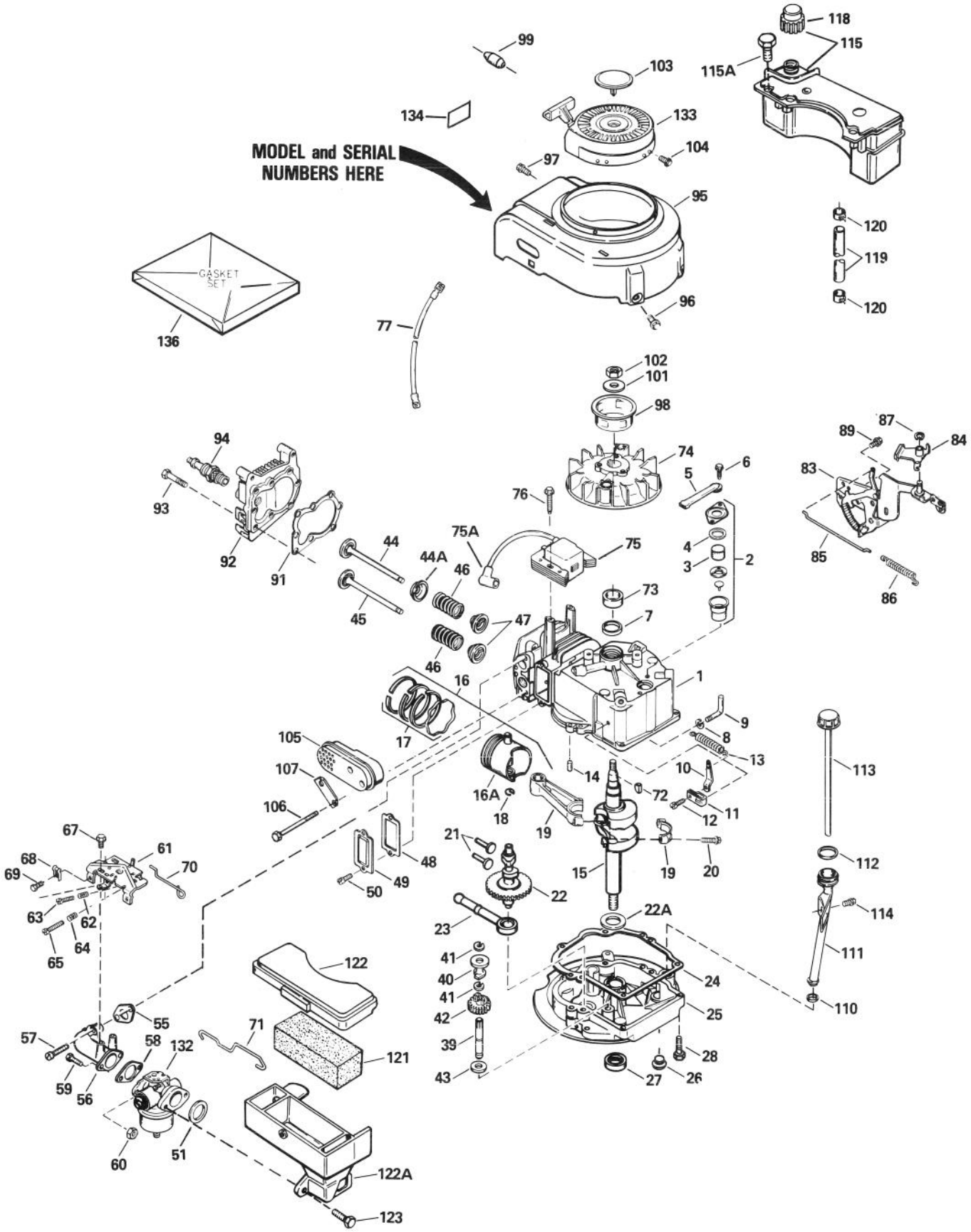

ENGINE TECUMSEH MODEL NO. TVS105-53108F

Ref. No.	Part No.	Description	No. Used
1	35513	Cylinder Assembly (Incl. Ref. #7 & 14)	1
2	34214A	Breather Assembly (Incl. Ref. #3, 4, 5 & 6)	1
3	33734	Element, Breather	1
4	33735*	Gasket, Breather	1
5	33886	Tube, Breather	1
6	30200	Screw, Hex washer hd. self-tap.	1
7	32600	Seal, Oil	
8	28277	Washer, Flat	
9	30589	Rod, Governor (Incl. Ref. #8)	1
10	31383A	Lever, Governor	1
11	31335	Clamp, Governor lever	1
12	650548	Screw, Hex washer hd.	1
13	31361	Spring, Extension	1
14	26727	Pin, Dowel	1
15	35664	Crankshaft Assy.	
16	35544	Piston, Pin & Ring Assy.(STD.) (Incl. Ref. #16A, 17 & 18)	1
16	35545	Piston, Pin & Ring Assy. (.010 oversize) (Incl. Ref. #16A, 17 & 18)	1
16	35546	Piston, Pin & Ring Assy. (.020 oversize) (Incl. Ref. #16A, 17 & 18)	1
16A	35541	Piston & Pin Assy. (Std.) (Incl. Ref. #18)	1
16A	35542	Piston & Pin Assy. (.010 oversize) (Incl. Ref. #18)	1
16A	35543	Piston & Pin Assy. (.020 oversize) (Incl. Ref. #18)	1
17	35547	Ring Set, Piston (Std.)	1
17	35548	Ring Set, Piston (.010 oversize)	
17	35549	Ring Set, Piston (.020 oversize)	
18	20381	Ring, Piston pin retaining	1
19	32875	Rod Assy., Connecting (Incl. Ref. #20)	1
20	32610A	Bolt, Connecting rod	1
21	27241	Valve, Lifter	1
22	33553	Camshaft (Mech. Compression Release)	1
22A	32323	Washer, Thrust	1
23	29914	Pump Assy., Oil	1
24	35261*	Gasket, Mounting flange	1
25	35660	Flange, Mounting (Incl. Ref. #26, 27 & 39)	1
26	27244	Plug, Oil drain	1
27	27897	Seal, Oil	1
28	650488	Screw, Hex hd.	1
39	30574	Shaft, Governor	1
40	30588A	Spool, Governor	1
41	29193	Ring, Retaining	1
42	30591	Gear Assy., Governor (Incl. Ref. #43)	1
43	30590A	Washer, Flat	1
44	29314B	Valve, Intake (Std.) (Incl. Ref. #47)	1
44	29315C	Valve, Intake (1/32" oversize) (Incl. Ref. #47)	1

Ref. No.	Part No.	Description	No. Used
44A	35390	Seal Assy., Intake	1
45	29313C	Valve, Exhaust (Std.) (Incl. Ref. #47)	1
45	29315C	Valve, Exhaust (1/32" oversize) (Incl. Ref. #47)	1
46	31672	Spring, Valve	1
47	31673	Cap, Lower valve spring	1
48	27234*	Gasket, Valve spring box	1
49	32755	Cover, Valve spring box	1
50	650128	Screw, Hex. hd.	1
51	34338*	Gasket, Air cleaner	1
55	34690*	Gasket, Intake pipe	1
56	31384A	Pipe, Intake (Incl. Ref. #55)	1
57	650451	Screw, Hex hd.	1
58	26756*	Gasket, Carburetor	1
59	6201	Screw, Hex hd.	1
60	29752	Nut & Lockwasher	1
61	33131A	Bracket Assy., Control (Incl. Ref. #62 thru 65)	1
62	33802	Spring, Compression	1
63	650777	Screw, Fil. hd.	1
64	31342	Spring, Compression	1
65	650549	Screw, Fil. hd.	1
67	30200	Screw, Hex washer hd. self-tap.	1
68	27793	Clip, Conduit	1
69	28942	Screw, Hex washer hd.	1
70	34337	Link, Governor spring	1
71	34336	Link, Throttle	1
72	611004	Key, Flywheel	1
73	34080	Spacer, Flywheel Key	1
74	611112	Flywheel	1
75	34443A	Solid State Assy.	1
75A	610118	Cover, Spark plug	1
76	650814	Screw, Hex hd.	1
77	34961	Wire, Ground	1
83	35015A	Bracket Assy., (S.E. Brake)	1
84	34968	Lever, Brake	1
85	34966	Link, Control	1
86	34965	Spring, Extension	1
87	32309	Ring, Retaining	1
89	650839	Screw, Hex hd. self-tap.	1
91	33015*	Gasket, Cylinder head	1
92	34342	Head, Cylinder	1
93	6021A	Screw, Hex flange hd.	1
94	35395	Spark Plug, Resistor (Champion RJ-19LM or equivalent)	1
95	35485	Housing, Blower	1
96	650831	Screw, Hex washer hd. Powerlok thread	1
97	30200	Screw, Hex washer hd. self-tap.	1
98	35000	Hub, Starter	1
99	34985	Retainer, Starter roper	1
101	650815	Washer, Belleville	1
102	650816	Nut, Flywheel	1
103	35392	Plug, Starter	1
104	650884	Screw, Hex washer hd.	1
105	391019	Muffler Assy. (Incl. Ref. #106)	1
106	650795	Screw, Hex hd.	1
107	33753	Plate, Lock	1
110	34265	Gasket, Fill tube	1
111	35577	Tube, Oil fill	1

*Indicates parts included in Gasket Set, Ref. #135.
*Indicates optional parts.

ENGINE TECUMSEH MODEL NO. TVS105-53108F (Continued)

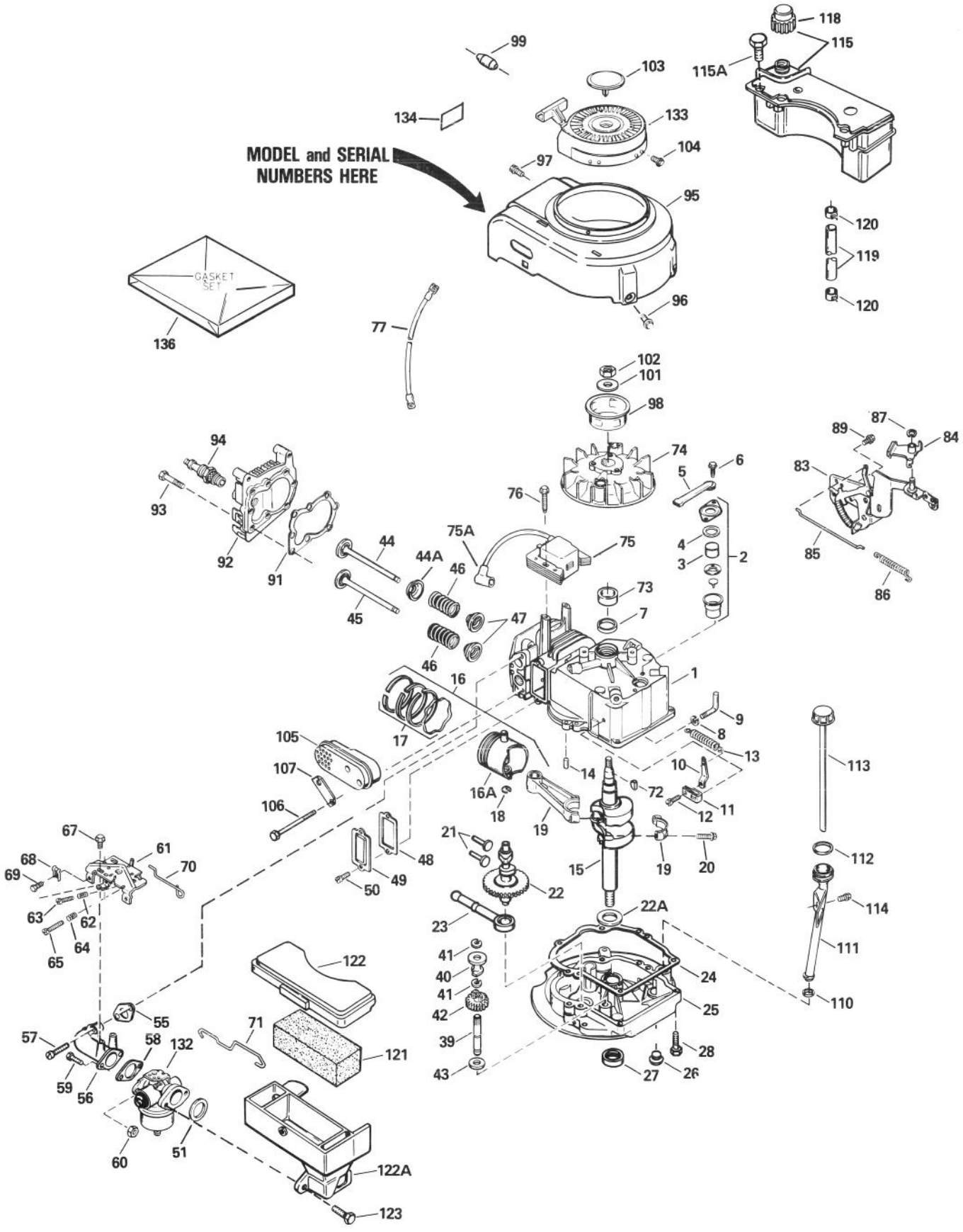

ENGINE TECUMSEH MODEL NO. TVS105-53108F (Continued)

Ref. No.	Part No.	Description	No. Used
112	35499	"O" Ring	1
113	35578	Dipstick, Oil fill	1
114	650562	Screw, Hex washer hd.	1
115	34476	Shroud & Tank Assy. (Incl. Ref. #118 & 120)	1
115A	28763	Screw, Hex washer hd.	1
118	33032	Cap, Fuel	1
119	30705	Line, Fuel	1
120	26460	Clamp, Fuel line	

Ref. No.	Part No.	Description	No. Used
121	34340	Filter, Air cleaner	1
122	34341A	Cover, Air cleaner	1
122A	34858	Body, Air Cleaner	1
123	650806	Screw, Fil. hd.	1
132	632099	Carburetor (Incl. Ref. #58)	1
133	590621	Starter, Rewind	1
134	34144	Decal, Primer	1
136	33238C	Gasket Set (Incl. items marked *)	1

*Indicates parts included in Gasket Set, Ref. #135.
*Indicates optional parts.

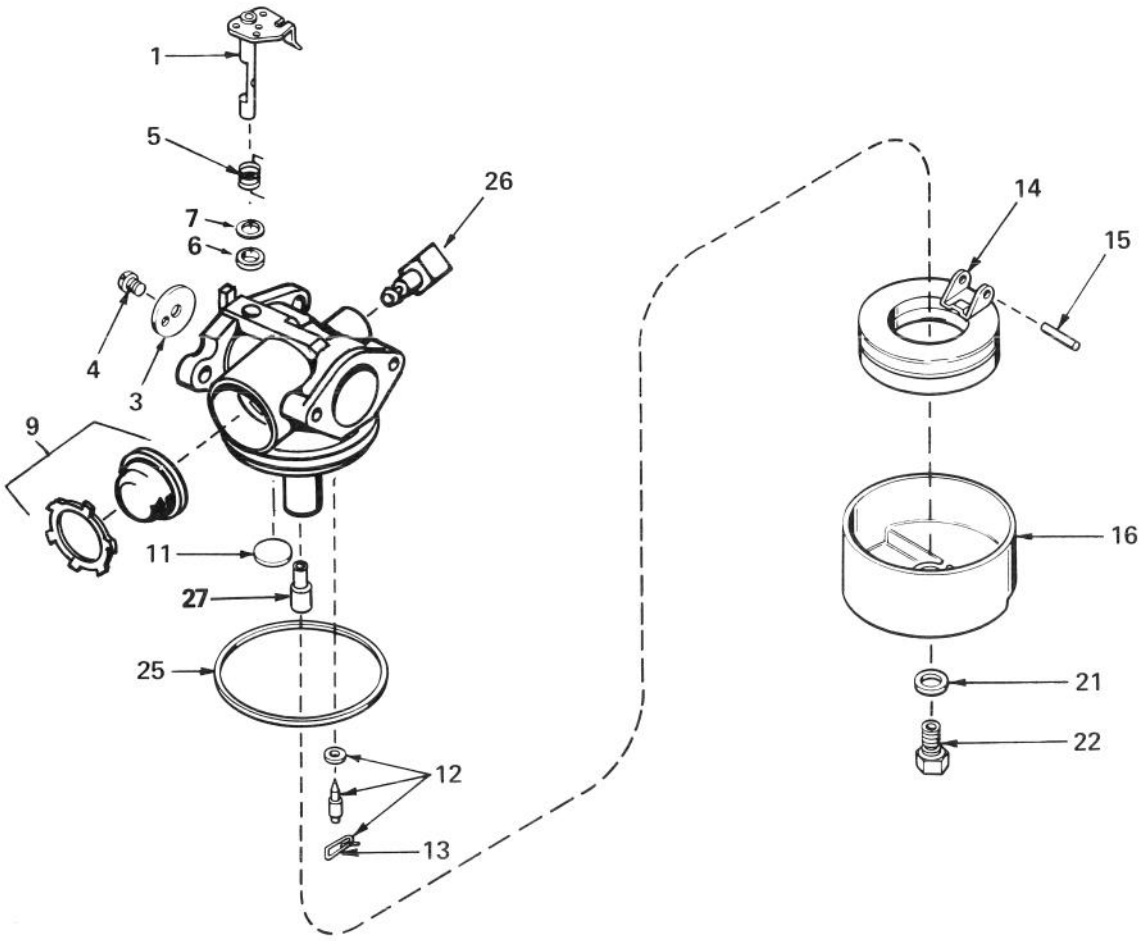

CARBURETOR NO. 632099

Ref. No.	Part No.	Description	No. Used
1	631615	Shaft & Lever Assy., Throttle	1
3	631616	Shutter, Throttle	1
4	650506	Screw, Throttle shutter	1
5	631767	Spring, Return	1
6	631971	Seal, Dust	1
7	631184	Washer, Flat	1
9	632047	Bulb & Retainer, Primer	1
11	631027	Plug, Welch	1
12	631021	Inlet Needle, Seat & Clip Assy. (Incl. Ref. #13)	1

Ref. No.	Part No.	Description	No. Used
13	631022	Clip, Inlet needle	1
14	632019	Float, Carburetor	1
15	631024	Shaft, Float	1
16	631700	Bowl, Float	1
21	631334	Gasket, Bowl-to-body	1
22	631937	Nut, Float bowl	1
25	631028	Gasket, Bowl-to-body	1
26	631807	Fitting, Fuel inlet	1
27	632158	Spacer	1

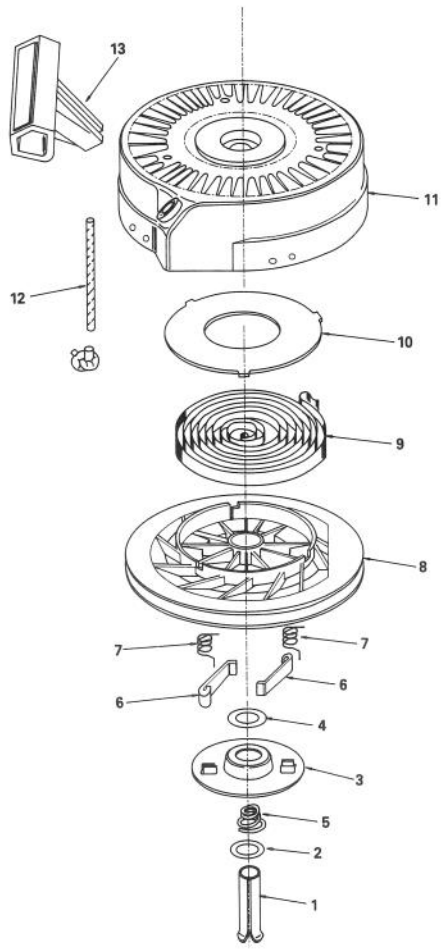

REWIND STARTER NO. 590621

Ref. No.	Part No.	Description	No. Used
1	590599A	Pin, Spring (Incl. Ref. #4)	1
2	590600	Washer	1
3	590615	Retainer	1
4	590601	Washer	1
5	590598	Spring, Brake	1
6	590616	Dog, Starter	2
7	590617	Spring, Dog	2

Ref. No.	Part No.	Description	No. Used
8	590618	Pulley	1
9	590619	Spring, Rewind	1
10	590620	Cover, Spring	1
11	590622	Housing Assembly, Starter	1
12	590535	Rope, Starter (Length 98" & 9/64" dia.)	1
13	590452	Handle, Starter	1

MAINTENANCE RECORD

Date								

MAINTENANCE RECORD

Date								

PRODUCT CHANGES

In an effort to make improvements available to TORO owners as quickly as possible, minor changes are incorporated into Toro's products from time to time that do not become immediately shown in the Parts Catalog. If such a change apparently has been made in your unit, which is not reflected in your manual, see your TORO Distributor or his Authorized TORO Service Dealer for information and part numbers.

IDENTIFICATION AND ORDERING

MODEL AND SERIAL NUMBERS

The Mower has two identification numbers: a model number and a serial number. The two numbers are stamped on a decal which is located on the mower housing between the rear wheels. In any correspondence concerning the mower, supply model and serial numbers to assure that correct information and replacement parts are obtained.

To order replacement parts from an Authorized TORO Service Dealer, supply the following information:

1. Model and serial numbers of the mower.
2. Part number, description, and quantity of part(s) desired.

Note: Do not order by reference number if a parts catalog is being used; use the PART NUMBER.

The Toro Promise

A Two Year Limited Warranty

On All

Gasoline Powered Consumer Products

The Toro Company promises to repair your TORO Product if defective in materials or workmanship. The following time periods from the date of purchase apply:

Residential Product ..... 2 Years
Residential Products Used Commercially ..... 45 Days

The costs of parts and labor are included, but the customer pays the transportation costs. Just return any residential product to an Authorized TORO Service Dealer or TORO Distributor.

Should you feel your TORO Product is defective and wish to rely on The Toro Promise, the following procedure is recommended:

1. Contact any Authorized TORO Service Dealer, TORO Master Service Dealer, or TORO Distributor (the Yellow Pages of your telephone directory is a good reference source).
2. He will either instruct you to return the product to him or recommend another Authorized TORO Service outlet which might be more convenient.
3. Bring the product along with your original sales slip, or other evidence of purchase date, to the service dealer.
4. The servicing dealer will inspect the unit, advise you whether the product is defective and, if so, make all repairs necessary to correct the defect without extra charge to you.

If for any reason you are dissatisfied with the dealer's analysis of the defect or the service performed, you may contact us.

Write:

TORO Consumer Service Department
8111 Lyndale Avenue South
Minneapolis, Minnesota 55420

The above remedy of product defects through repair by an Authorized TORO Service Dealer is the purchaser's sole remedy for any defect.

THERE IS NO OTHER EXPRESS WARRANTY. ALL IMPLIED WARRANTIES OF MERCHANTABILITY AND FITNESS FOR USE ARE LIMITED TO THE DURATION OF THE EXPRESS WARRANTY.

Some states do not allow limitations on how long an implied warranty lasts, so the above limitation may not apply to you.

This warranty applies only to parts or components which are defective and does not cover repairs necessary due to normal wear, misuse, accidents, or lack of proper maintenance. Regular, routine maintenance of the unit to keep it in proper operating condition is the responsibility of the owner.

All warranty repairs reimbursable under The Toro Promise must be performed by an Authorized TORO Service Dealer using Toro approved replacement parts.

Repairs or attempted repairs by anyone other than an Authorized TORO Service Account are not reimbursable under The Toro Promise. In addition, these unauthorized repair attempts may result in additional malfunctions, the correction of which is not covered by warranty.

THE TORO COMPANY IS NOT LIABLE FOR INDIRECT, INCIDENTAL OR CONSEQUENTIAL DAMAGES IN CONNECTION WITH THE USE OF THE PRODUCT INCLUDING ANY COST OR EXPENSE OF PROVIDING SUBSTITUTE EQUIPMENT OR SERVICE DURING PERIODS OF MALFUNCTION OR NON-USE.

Some states do not allow the exclusion or limitation of incidental or consequential damages, so the above limitation or exclusion may not apply to you.

This warranty gives you specific legal rights, and you may also have other rights which vary from state to state.

COUNTRIES OTHER THAN THE UNITED STATES OR CANADA

Customers who have purchased TORO products exported from the United States or Canada should contact their TORO Distributor (Dealer) to obtain guarantee policies for your country, province or state. If for any reason you are dissatisfied with your Distributor's service or have difficulty obtaining guarantee information, contact the TORO importer. If all other remedies fail, you may contact us at The Toro Company.

Compliance with Radio Interference Regulations Certified.
Certifie Conforme au Reglement sur le Brouillage Radioelectrique.