Form No. 3354–587 Rev A

Rear Roller Brush Kit

Reelmaster® 5200D and 5400D

Model No. 03533

Installation Instructions

Important It is recommended that the Rear Roller Brush Kit only be used when cutting in the height of cut range of 1/4” to 7/8”.

Rear Roller Brush Kit may be used on the following:

- Model 03527 and 03528 Cutting Units
- All RM5200 and RM5400 Traction Units
- On RM5100 and 5300 Traction Units, the clip ace (reel speed sensors) function must be by–passed. Contact your local Toro distributor for information.

Loose Parts

Description	Quantity
Adjusting bolt–3/8–24 x 1–1/2” lg. Adjusting bolt–3/8–24 x 1” lg.	2 2
Drive bolt–3/8–16 x 1/2” lg.	1
End weight Lock nut–3/8–16	1 2
Roller brush assembly Key Bolt–5/16–18 x 1–1/4” lg. Flange nut–5/16	1 1 2 2
Brush plate assembly	1
Flange bolts–5/16–18 x 5/8” lg.	2
Driven pulley	1
Flange bolts–5/16–18 x 5/8” lg.	1
Belt	1
Wear pad	1
Bolt–3/8–16 x 2–1/4” lg. Lock nut–3/8–16	1 1
Arm bracket	2
Installation instructions	1
Parts catalog	1

Tools / Materials Required for Assembly:

- 1/8” Allen wrench
- Alignment punch and hammer
- 3/8” wrench (6 in. length)
- 1/2” wrench
- 1/2” deep well socket
- 7/16” wrench
- 9/16” wrench
- 9/16” Deep well socket
- 5/8” socket
- 6” crescent wrench
- 242 Loctite (blue)
- Never Seize
- Torque wrench (range: 15–33 ft.–lbs)

Installation

1. Park the traction unit on a level surface and engage the parking brake.
2. Ensure that the cutting units are disengaged. Turn the engine off and remove the key. Remove all cutting units from traction unit.
3. Remove bedbar/bedknife assembly from cutting unit as follows:
   - Remove (2) bedknife adjusting screws from each adjuster bracket on cutting unit (Fig. 1).
   - Remove wheel bolt and spacer securing each end of bedbar to cutting unit.
4. Remove the (2) bolts securing the counter weight to the left end of the cutting unit. Remove the counter weight (Fig. 1).
5. Remove drive bolt from end of reel shaft (Fig. 1).

Note: Retain all components for re–installation or future applications.

© 2006 by The Toro Company
8111 Lyndale Avenue South
Bloomington, MN 55420-1196

All Rights Reserved
Printed in the USA

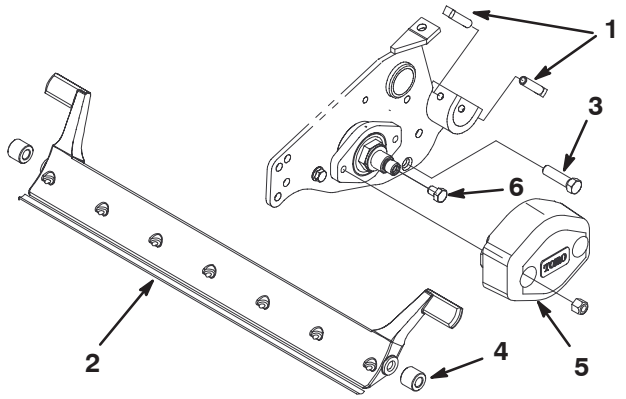

Figure 1

1. Adjusting screws
2. Bedbar/bedknife assembly
3. Wheel bolt
4. Spacer
5. Counter weight
6. Drive bolt

6. Apply Never Seize to threads of short and long adjusting bolts to prevent rusting.

7. Thread a short and long adjusting bolt into each bedbar adjuster bracket. Position bolts as shown in figure 2.

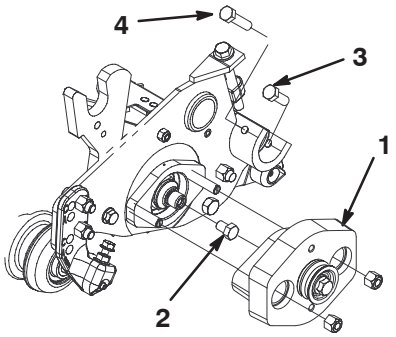

Figure 2

1. End weight assembly
2. Special drive bolt
3. Short adjusting bolt (2)
4. Long adjusting bolt (2)

8. Apply Never Seize to threads of wheel bolts to prevent rusting

9. Reinstall bedbar/bedknife assembly to cutting unit with spacers and wheel bolts previously removed. Torque bolts to 30 to 40 ft.–lbs. (5/8" socket).

Important Check cutting unit for desired height of cut and attitude. Check reel contact. Reset per Operator's Manual, if required, before installing Rear Roller Brush Kit.

10. Apply Locktite to threads of new special drive bolt.

11. Install special drive bolt into end of reel shaft (Fig. 2). Torque bolt to 27 to 33 ft.–lbs. (9/16" wrench).

12. Mount new end weight assembly to reel bearing housing with (2) 3/8–16 lock nuts (9/16" deep well socket) (Fig. 2).

13. Remove and discard flange nut and bolt securing each end of roller to support rods (Fig. 3).

14. Using a 1/8" Allen wrench, loosen set screws securing locking collars to each end of roller brush shaft (Fig. 3).

15. Position roller brush assembly onto support rods aligning mounting holes (Fig. 3).

16. Using a 1/2" wrench, thread a new 5/16" flange nut onto (2) 5/16–18 x 1" lg. bolts as shown in figure 3.

17. Loosely install roller brush assembly to support rods by threading the (2) 5/16–18 x 1" lg. bolts thru roller brush brackets and into support rods. Make sure rear roller is centered between support rods and tighten bolts (Fig. 3). Do not tighten nuts at this time.

Note: Bolts secure roller and nuts secure roller brush bracket.

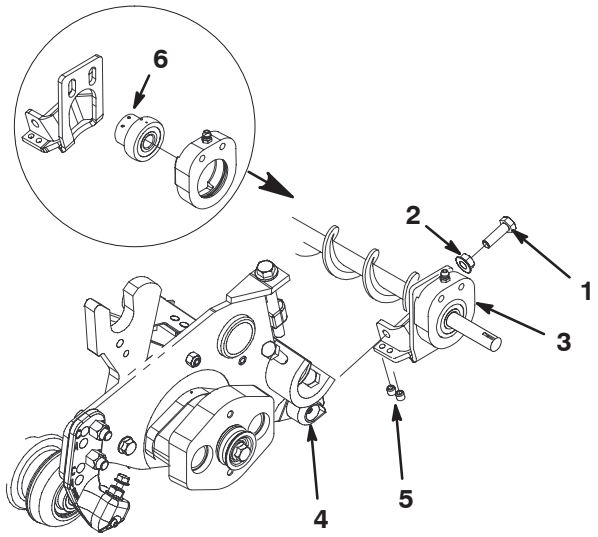

Figure 3

1. Bolt (2)
2. Flange nut (2)
3. Roller brush assembly
4. Support rod
5. Set screws
6. Locking collar set screw

18. Make sure roller brush brackets are parallel with end weight and tighten flange nuts locking roller brush brackets to support rods.(Fig. 3).

Note: Use a 6" crescent wrench to hold roller brush bracket while tightening flange nut (1/2" wrench).

19. Make sure brackets are parallel with end weight and tighten set screws securing roller brush brackets to underside of support rods.(Fig. 3).

20. Remove (2) locknuts and (4) washers securing cover to brush plate assembly (Fig. 4) .

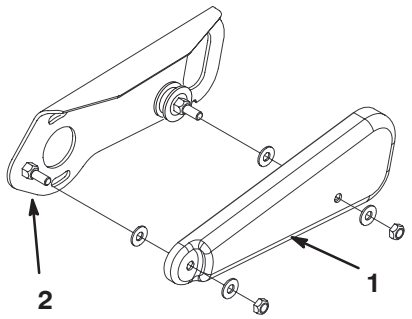

Figure 4

1. Cover
2. Brush plate assembly

21. Loosely mount brush plate assembly to end weight with (2) 5/16–18 x 5/8" lg. flange bolts (Fig. 5).

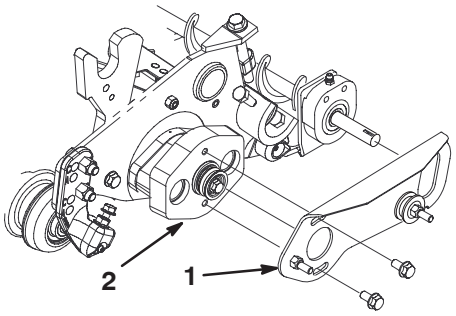

Figure 5

1. Brush plate assembly
2. End weight

22. Remove tape securing square key to roller shaft (Fig. 6). Insert square key in key way on roller brush shaft. Slide driven pulley onto key and end of roller brush shaft (Fig. 6).

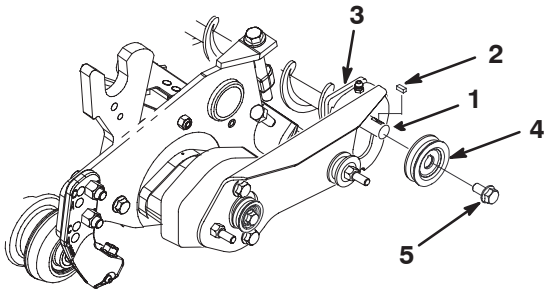

Figure 6

1. Roller shaft
2. Square key
3. Slot in shaft (7/16" wrench)
4. Driven pulley
5. Flange bolt

23. Apply 242–Loctite (blue) to threads of 5/16–18 x 5/8" lg. flange bolt. Secure pulley to shaft with bolt and torque to 15 to 19 ft.–lbs. (1/2" wrench) (Fig. 6).

Note: Hold roller shaft with a 7/16" wrench to tighten pulley bolt.

24. Move roller brush assembly so that all three pulleys are in a straight line.

Note: Belt may fail prematurely if pulleys are not properly aligned.

25. Rotate the bearing locking collar in the direction of the rotation of the brush, by hand until the collar is tight on the roller brush shaft (Fig. 7).

26. Tighten the collar further by placing a punch in the blind hole of the collar and striking it sharply in the direction of the rotation of the brush (Fig. 7). Retighten the collar set screw to secure the adjustment (1/8" Allen wrench).

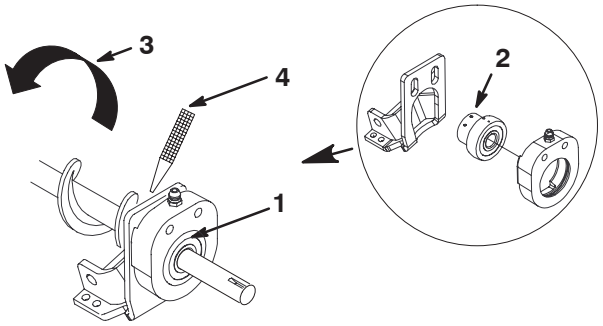

Figure 7

1. Bearing
2. Locking collar (blind hole)
3. Direction of brush rotation
4. Punch

27. Loosen (2) bolts securing each roller brush bearing housing to brush brackets (1/2 wrench) (Fig. 8).

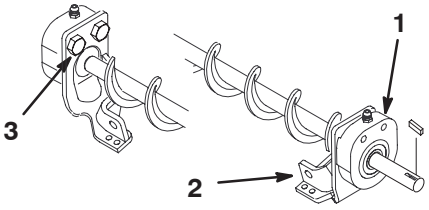

Figure 8

1. Roller brush bearing housing (2)
2. Brush bracket (2)
3. Bolts (4)

28. Adjust roller bearing housings until there is slight contact to 0.010" clearance between roller brush and rear roller. Tighten bolts securing roller bearing housings to brush brackets (Fig. 8).

Important Extreme contact will cause premature brush wear.

29. Install belt over pulleys as shown in figure 9.

30. Using about 5 lbs of force, **pull up** on top of brush plate to initially set belt tension. Tighten 5/16" flange bolts securing brush plate to end weight (1/2" deep well socket) (Fig. 9).

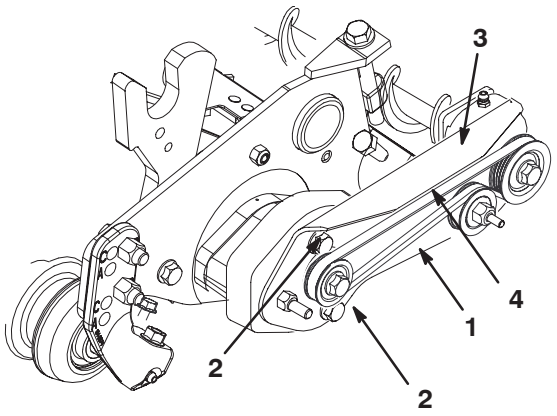

Figure 9

1. Pivot plate
2. Flange bolts
3. Lift up here to tension belt
4. Press & measure belt deflection here

---

31. Check belt tension. Correct belt tension should have approximately 0.25" deflection at the center of the belt with 2 lbs of force applied (Fig. 9).

32. Insert a washer onto each cover mounting bolt (Fig. 10).

33. Slide belt cover onto mounting bolts and secure with (2) washers and thin lock nuts (1/2" wrench) (Fig. 10). **Do not over–tighten nuts as damage to cover may occur.**

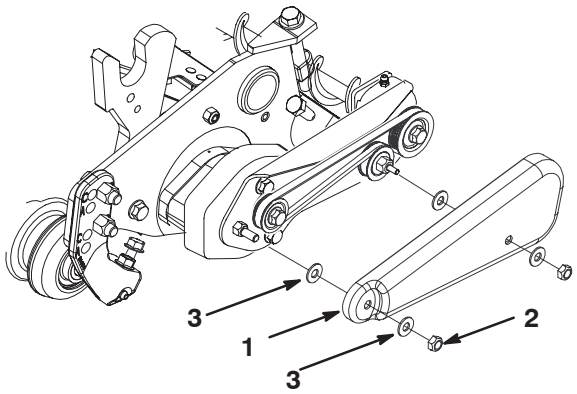

Figure 10

1. Cover
2. Thin locknuts
3. Washers

---

34. Lower and secure rear shield, if raised.

35. Lubricate grease fittings on roller brush bearing housings, reel bearing housings (until grease comes out weep hole) and remainder of cutting unit with No. 2 General Purpose Lithium Base Grease (Fig. 11). Wipe off excess grease from fittings and weep hole area.

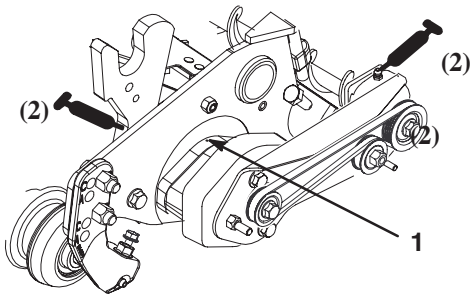

Figure 11

1. Weep hole

Traction unit:

1. Check bolt and nut securing front center cutting unit lift arm to to lift arm carrier frame. If nut is positioned on under side of the lift arm, remove nut and bolt and install new nut and bolt with nut on top of the lift arm, as shown in figure 12.

2. Affix wear pad to front of lift arm carrier frame, positioning as shown in figure 12.

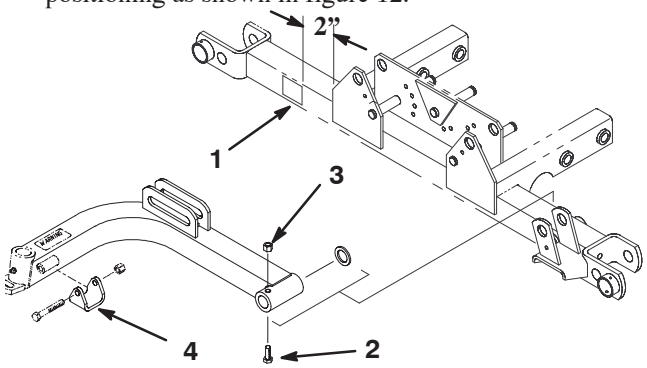

Figure 12

1. Wear pad
2. Bolt
3. Lock nut
4. Arm bracket

---

3. On the #4 and #5 cutting unit lift arms, remove the existing arm bracket and replace with the arm brackets included in the kit (Fig. 12)

Maintenance

1. Clean under belt cover and check belt tension every 50 hours.

2. Grease fittings weekly or after every washing.

3. When replacing roller brush, torque J bolts to 20 to 25 in–lbs.

Important Backlapping at the incorrect reel speed may loosen and strip the drive pulley threads. Refer to the Cutting Unit Operator's Manual for backlapping procedure.

Important When performing cutting unit maintenance, rotate cutting unit up onto front roller and carrier frame to prevent damage to rear roller brush.

4. Roller brush, idler bearing, and belt are considered consumable items.