FORM NO. 3313-590 Rev. A

TORO®

MODEL NO. 38520-9000001 & UP
MODEL NO. 38525-9000001 & UP

PARTS CATALOG

824 SNOWTHROWER

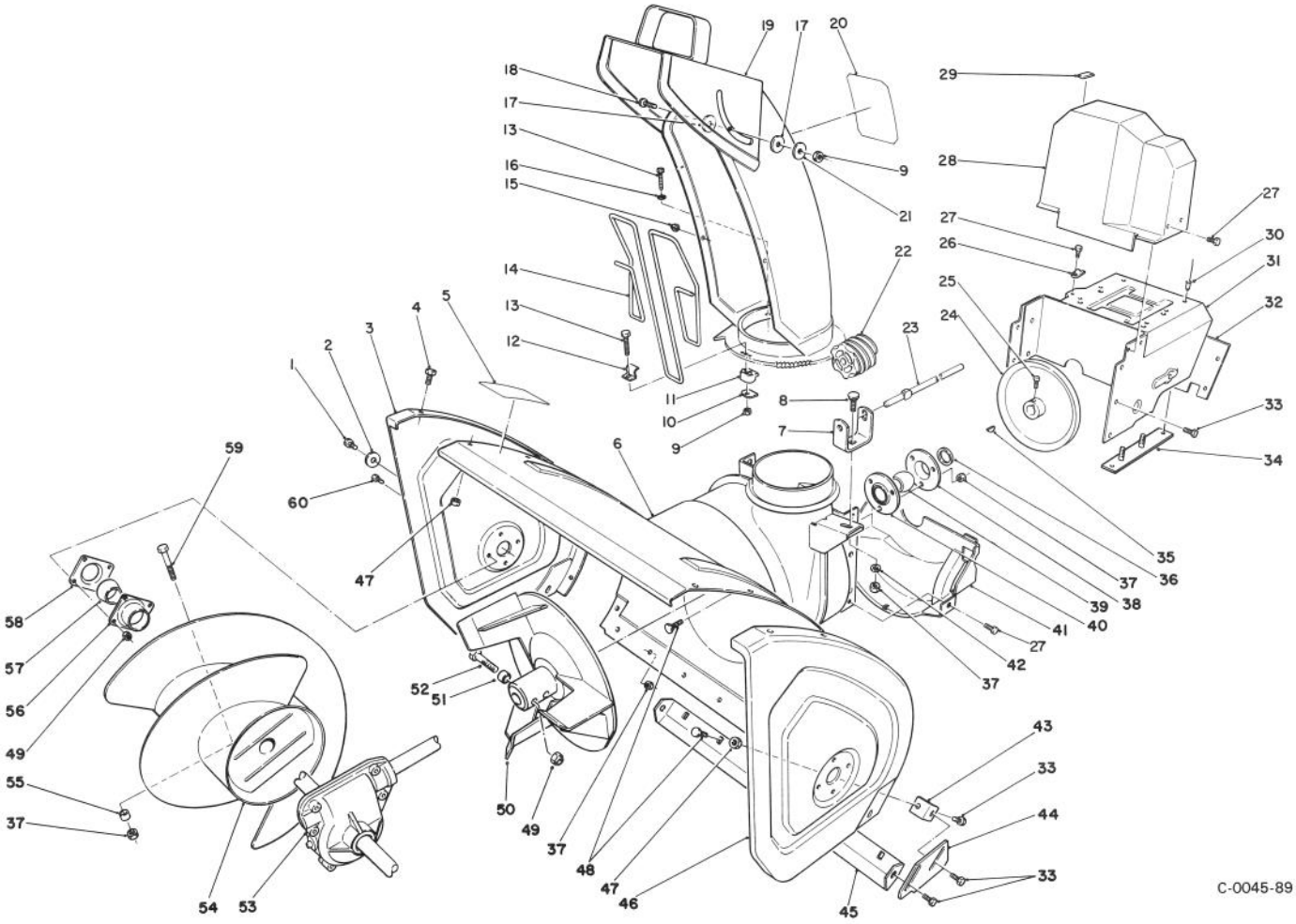

HOUSING & CHUTE ASSEMBLY

Ref. No.	Part No.	Description	No. Used
1	323-6	Screw - Cap Hex Hd.	2
2	3-0750	Washer - Retaining	2
3	66-7820	Plate - Side R.H.	1
4	3234-28	Screw - Hex Flange Hd.	10
5	53-7670	Decal - Danger Auger	1
6	62-0720	Housing - 24"	1
7	63-2180	Bracket - Gear	1
8	3230-2	Bolt - Carriage	1
9	3296-2	Nut - Lock	4
10	63-2670	Plate - Chute Retainer	3
11	62-1430	Retainer - Chute	3
12	63-3130	Bracket - Chute Guard	1
13	3274-13	Screw - Machine	3
14	63-3020	Guard - Chute	1
15	3290-326	Nut - Push	2

Ref. No.	Part No.	Description	No. Used
16	3256-14	Washer - Flat	1
17	63-2900	Washer - Plastic	2
18	32122-32	Screw	1
19	62-0840	Chute Assembly	1
20	63-3740	Decal - Danger Chute (Model No. 38520)	1
*	53-7660	Decal - Danger Chute (Model No. 38525)	1
21	3256-61	Washer - Flat	1
22	62-0820	Gear - Worm	1
23	62-1720	Rod - Chute Gear	1
24	62-1300	Pulley - Impeller	1
25	3242-4	Screw - Set Sq. Hd.	2
26	63-2300	Retainer - Cable	1
27	32144-4	Screw - Hex. Flange Hd.	6

*Not Illustrated

©The TORO Company - 1988

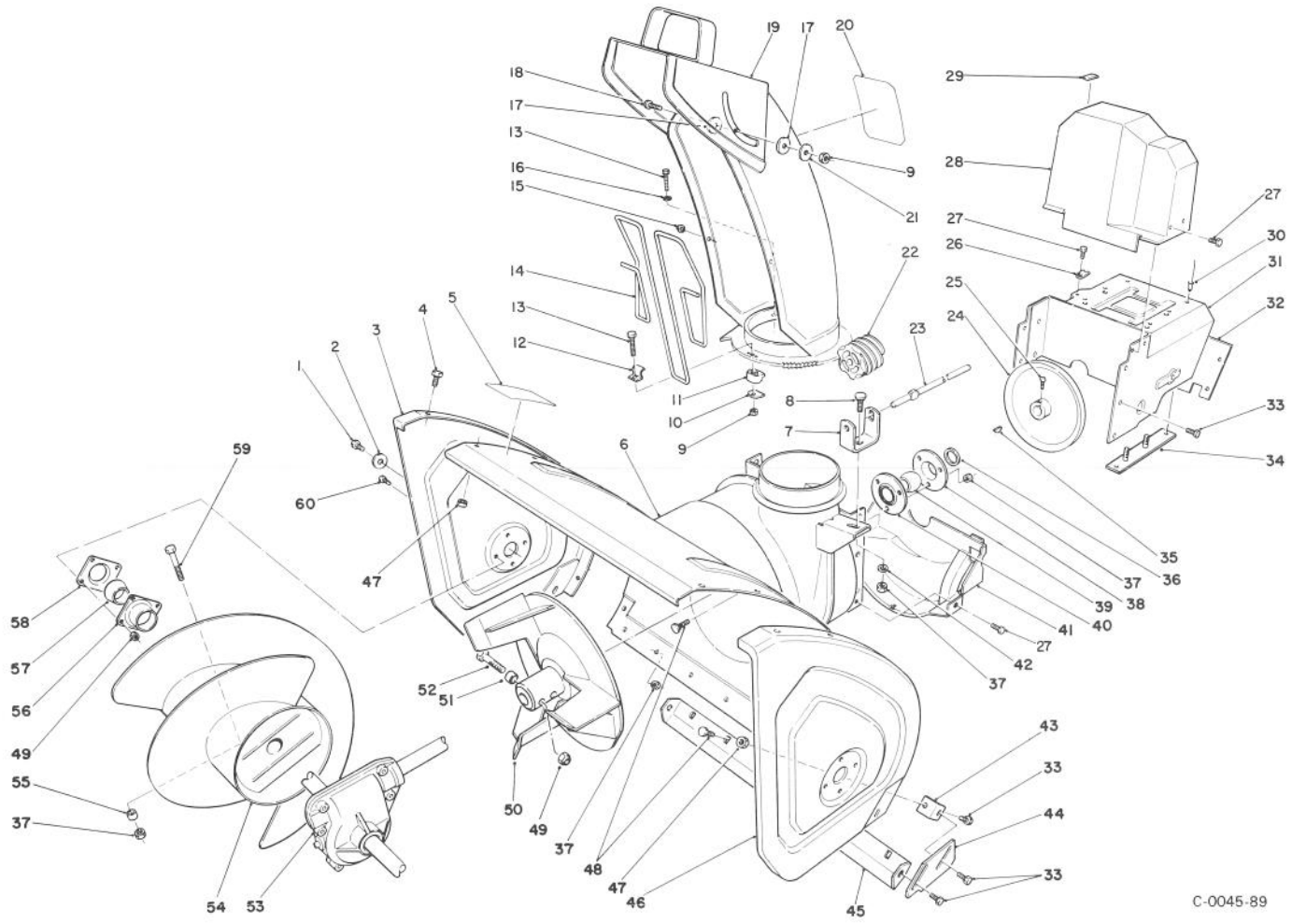

HOUSING & CHUTE ASSEMBLY (Continued)

Ref. No.	Part No.	Description	No. Used
28	63-2080	Cover - Belt (Upper)	1
29	63-3290	Cover - Cable	1
30	3269-23	Rivet	4
31	66-7781	Frame - Engine	1
32	62-1440	Cover - Engine Frame	1
33	3234-7	Screw - Hex. Washer Hd.	12
34	68-4130	Plate - Engine Stud L.H.	1
*	68-4120	Plate - Engine Stud R.H.	1
35	3257-23	Key - Woodruff	1
36	252-80	Washer - Thrust	1
37	3296-29	Nut - Lock	12
38		Flange - Bearing (Rear)	1
39	63-3450	Bearing - Impeller	1
40		Flange - Bearing (Front)	1
41	62-1400	Cover - Belt (Lower)	1
42	3256-23	Washer - Flat	1
43	62-1240	Bracket - Skid	2
44	62-0980	Plate - Skid L.H.	1
*	62-0990	Plate - Skid R.H.	1
45	66-7762	Blade - Scraper	1
46	66-7830	Plate - Side L.H.	1
47	3296-47	Nut - Lock	12
48	3230-23	Screw - Carriage	9

Ref. No.	Part No.	Description	No. Used
49	3296-42	Nut - Lock	10
50	66-7910	Impeller	1
51	66-8010	Spacer	2
52	321-44	Screw - Cap Hex. Hd.	2
53	66-8020	Auger Gearbox Assembly	1
54	63-2750	Auger - R.H. (Model No. 38520)	1
*	63-2760	Auger - L.H. (Model No. 38520)	1
*	68-7450	Auger - R.H. (Model No. 38525)	1
*	68-7460	Auger - L.H. (Model No. 38525)	1
55	25-5090	Spacer - Auger Hub	2
56	20-0990	Flange - Bearing (Inner)	2
57	20-0980	Bearing - Auger	2
58	20-1000	Flange - Bearing (Outer)	2
59	17-7030	Bolt - Auger	2
60	321-3	Screw - Cap Hex Hd.	8
*	12-8789	Impeller Bearing Assembly (Incl. Ref. #38-40)	1
*	12-8949	Loose Parts	1

*Not Illustrated

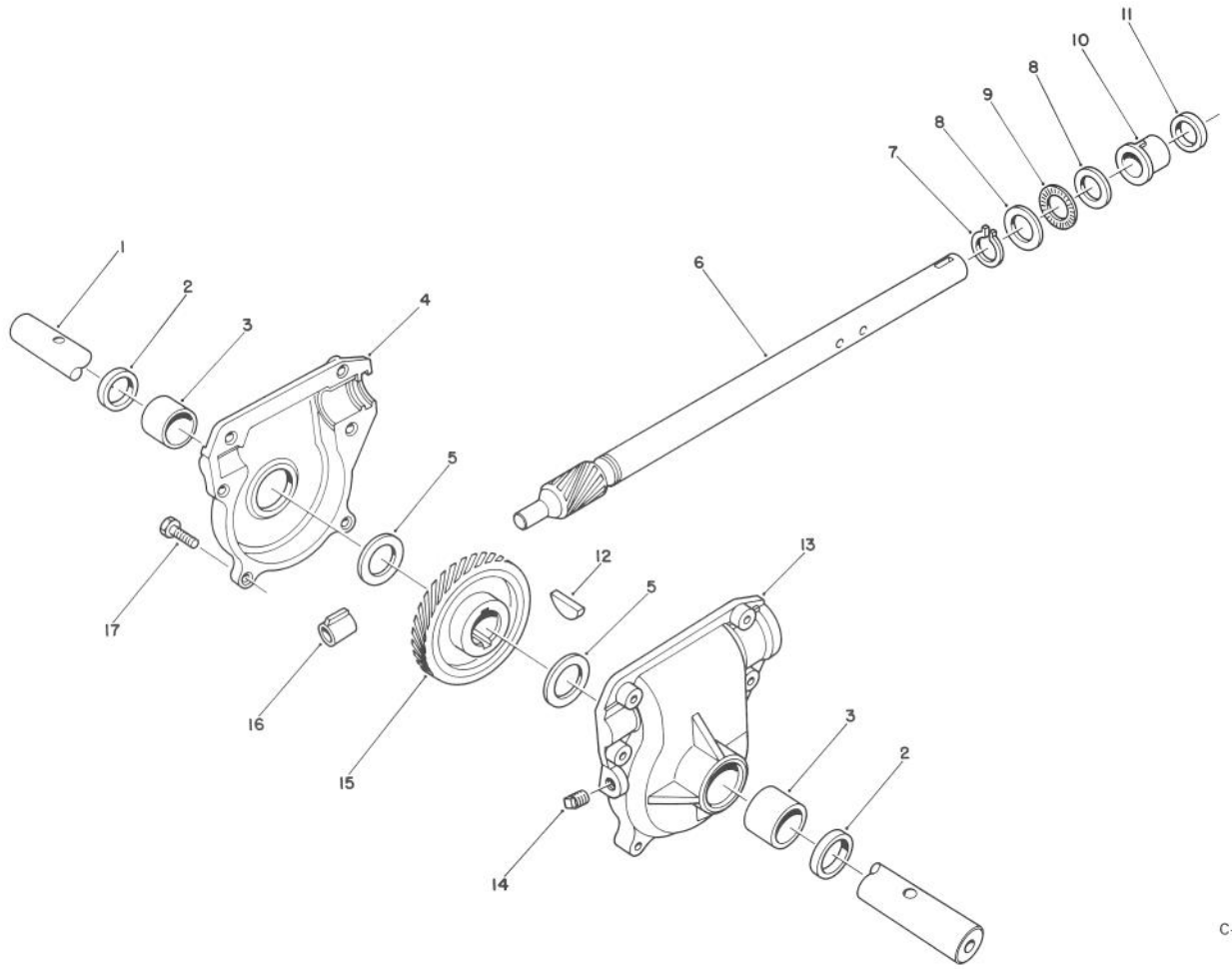

C-0046-89

24" AUGER GEARCASE ASSEMBLY NO. 66-8020

Ref. No.	Part No.	Description	No. Used
1	62-1530	Shaft - Auger (24")	1
2	7-0045	Seal - Oil	2
3	256-237	Bushing - Sleeve	2
4	62-0570	Gearcase Assembly - R.H. (Incl. Ref. # 2-3)	2
5	252-71	Bearing - Thrust	2
6	66-7810	Shaft - Impeller	1
7	32151-33	Ring - Snap	1
8	252-78	Washer - Thrust	2
9	252-76	Bearing - Thrust	1

Ref. No.	Part No.	Description	No. Used
10	37-6560	Bushing - Input	1
11	253-149	Seal - Input	1
12	3257-10	Key - Woodruff	1
13	62-0580	Gearcase Assembly - L.H. (Incl. Ref. # 2-3)	1
14	281-1	Plug - Pipe Sq. Hd.	1
15	62-0120	Gear - Helical	1
16	62-1150	Bushing - Worm	1
17	32144-86	Screw - Hex Washer Hd.	6

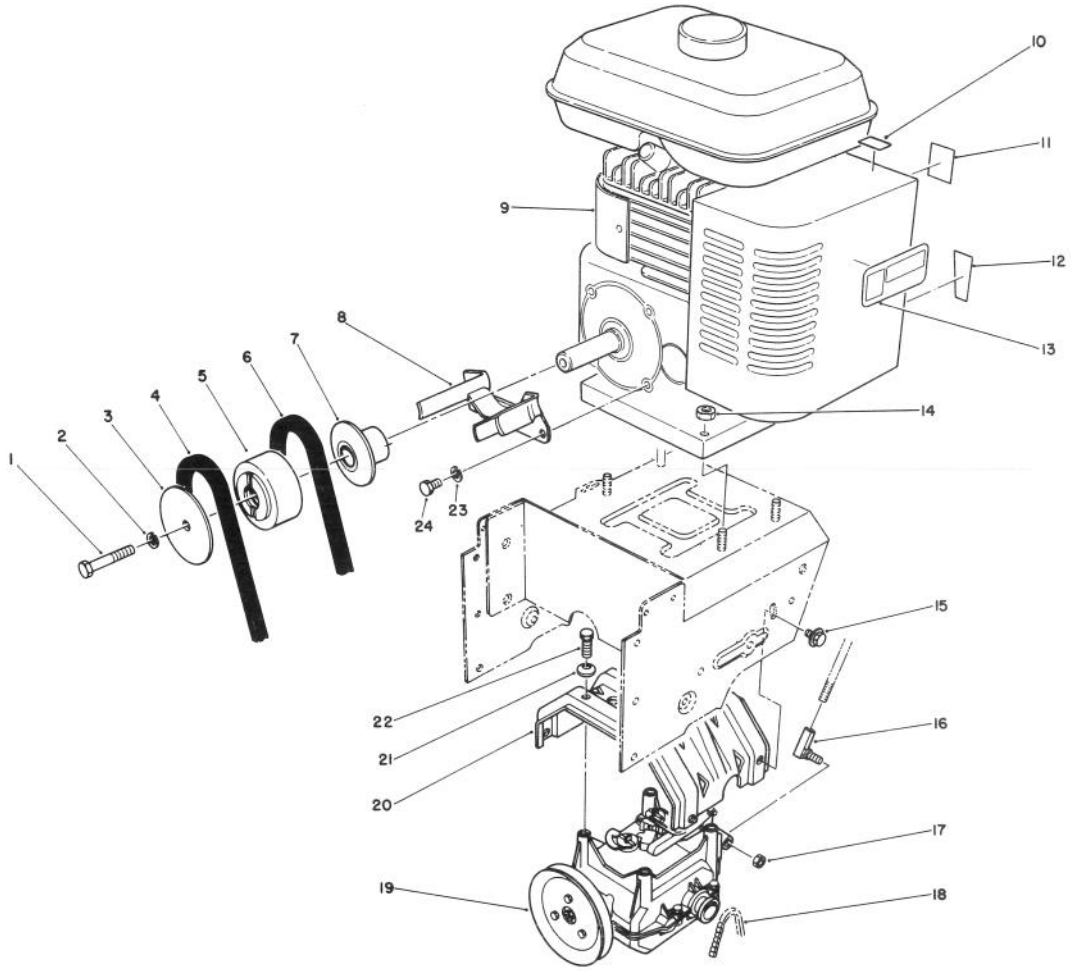

C-0049-89

ENGINE ASSEMBLY

Ref. No.	Part No.	Description	No. Used
1	3211-9	Screw - Cap Hex. Hd.	1
2	3253-21	Washer - Lock	1
3	62-0910	Sheave Half - Impeller	1
4	63-2961	Belt - Impeller	1
5	62-0900	Hub - Sheave	1
6	63-2952	Belt - Traction	1
7	62-0890	Sheave Half - Traction	1
8	68-7490	Guide - Belt	1
9	68-8290	Engine - 8 hp.	1
10	68-8540	Decal - Primer	1
11	68-9030	Decal - Choke (Model No. 38520)	1
*	63-3490	Decal - Choke (Model No. 38525)	1
12	63-3190	Decal - Throttle	1

Ref. No.	Part No.	Description	No. Used
13	62-7290	Decal - Hot Surface (Model No. 38520)	1
*	63-2310	Decal - Hot Surface (Model No. 38525)	1
14	3290-357	Nut - Lock	4
15	3234-7	Screw - Hex Flange Hd.	4
16	63-2640	Joint- Ball	1
17	3296-39	Nut - Lock	1
18	63-2930	Chain - Drive	1
19	66-8030	Transmission Assembly	1
20	63-2990	Frame - Transmission	1
21	3290-461	Washer - Belleville	4
22	11-0590	Screw - Cap Hex Hd.	4
23	3253-4	Washer - Lock	2
24	3210-1	Screw - Cap Hex Hd.	2

*Not Illustrated

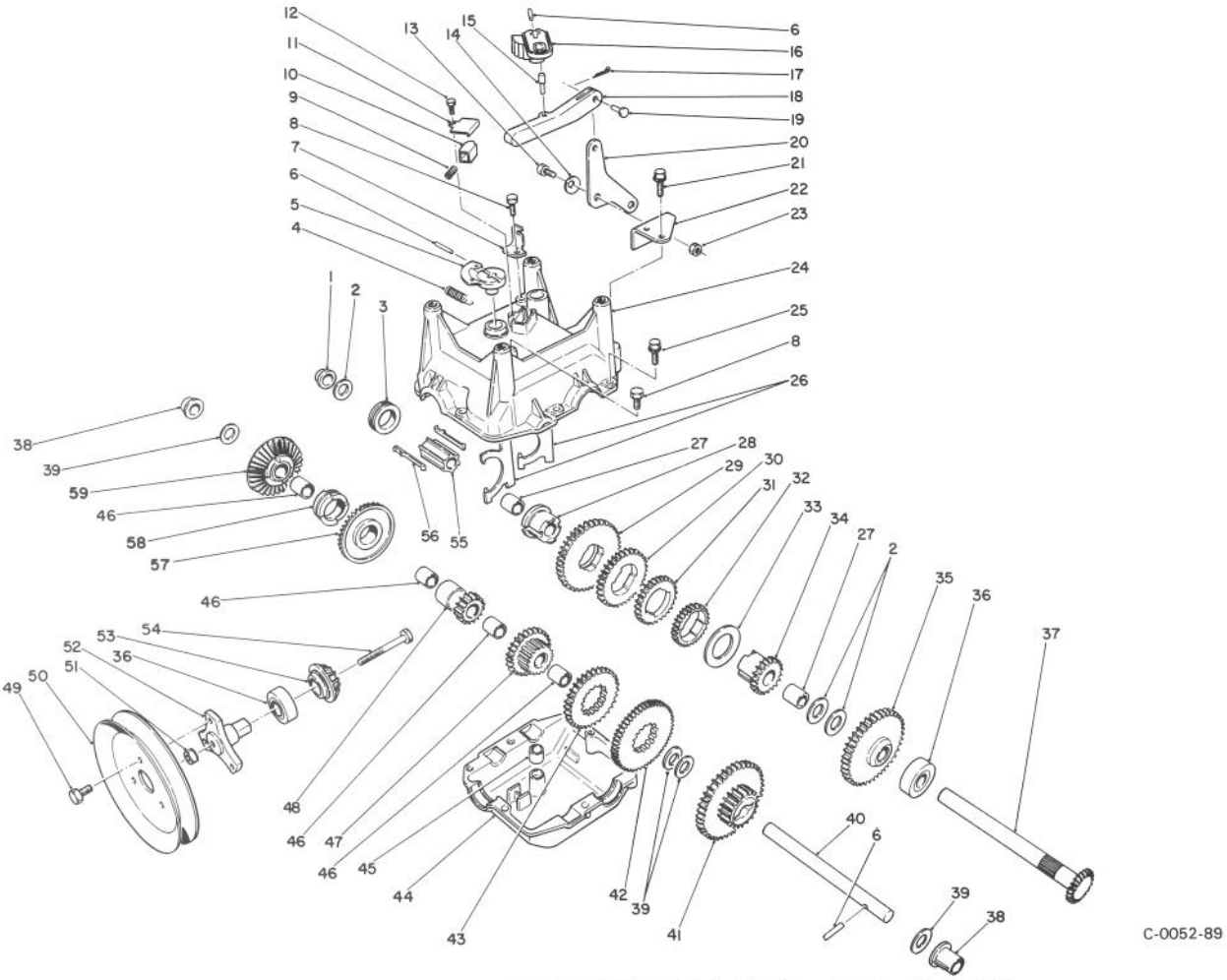

TRANSMISSION ASSEMBLY NO. 66-8030

Ref. No.	Part No.	Description	No. Used
1	62-1180	Bushing - Output (Flange)	1
2	252-59	Washer - Thrust	3
3	62-0430	Collar - Shift (Speed)	1
4	63-2920	Spring - Extension (F/R Return)	1
5	62-0880	Lever - Direction Shift	1
6	32121-106	Pin - Coil	3
7	62-1740	Bracket - Cable	1
8	32144-4	Screw - Self Tapping	2
9	63-2890	Spring - Compression (Detent)	1
10	62-1020	Button - Detent	1
11	62-1690	Cover - Detent	1
12	32104-71	Screw - Pan Hd.	1
13	63-3410	Bolt - Shoulder	1
14	3290-477	Washer - Curved	1
15	63-2190	Pin - Gearshift Link	1
16	62-0870	Lever - Gear Shift	1
17	3272-1	Pin - Cotter	1
18	62-0860	Link - Gearshift	1
19	283-3	Pin - Clevis	1
20	63-2600	Bellcrank	1
21	32104-95	Screw - Hex Washer Hd.	2

Ref. No.	Part No.	Description	No. Used
22	62-1190	Bracket - Bellcrank	1
23	3296-42	Nut - Lock	1
24	62-0490	Gear Case - Upper	1
25	32144-86	Screw - Hex Washer Hd.	6
26	62-1040	Yoke-Shift	2
27	62-1350	Bushing - Output	2
28	62-0320	Sleeve	1
29	62-0240	Gear - 45T	1
30	62-0220	Gear - 34T	1
31	62-0200	Gear - 27T	1
32	62-0250	Gear - 29T	1
33	63-2280	Washer - Thrust	1
34	62-0340	Sleeve Gear 19T	1
35	62-0370	Gear - 41T	1
36	38-7820	Bearing - Ball	2
37	62-1080	Shaft - Output	1
38	62-1170	Bushing - Flange	2
39	257-10	Washer - Thrust	4
40	62-0330	Shaft - Imtermediate	1
41	62-0360	Gear - Compound 19T/41T	1
42	62-0260	Gear - 51T	1
43	62-0210	Gear - 33T	1
44	62-0480	Gear Case - Lower	1

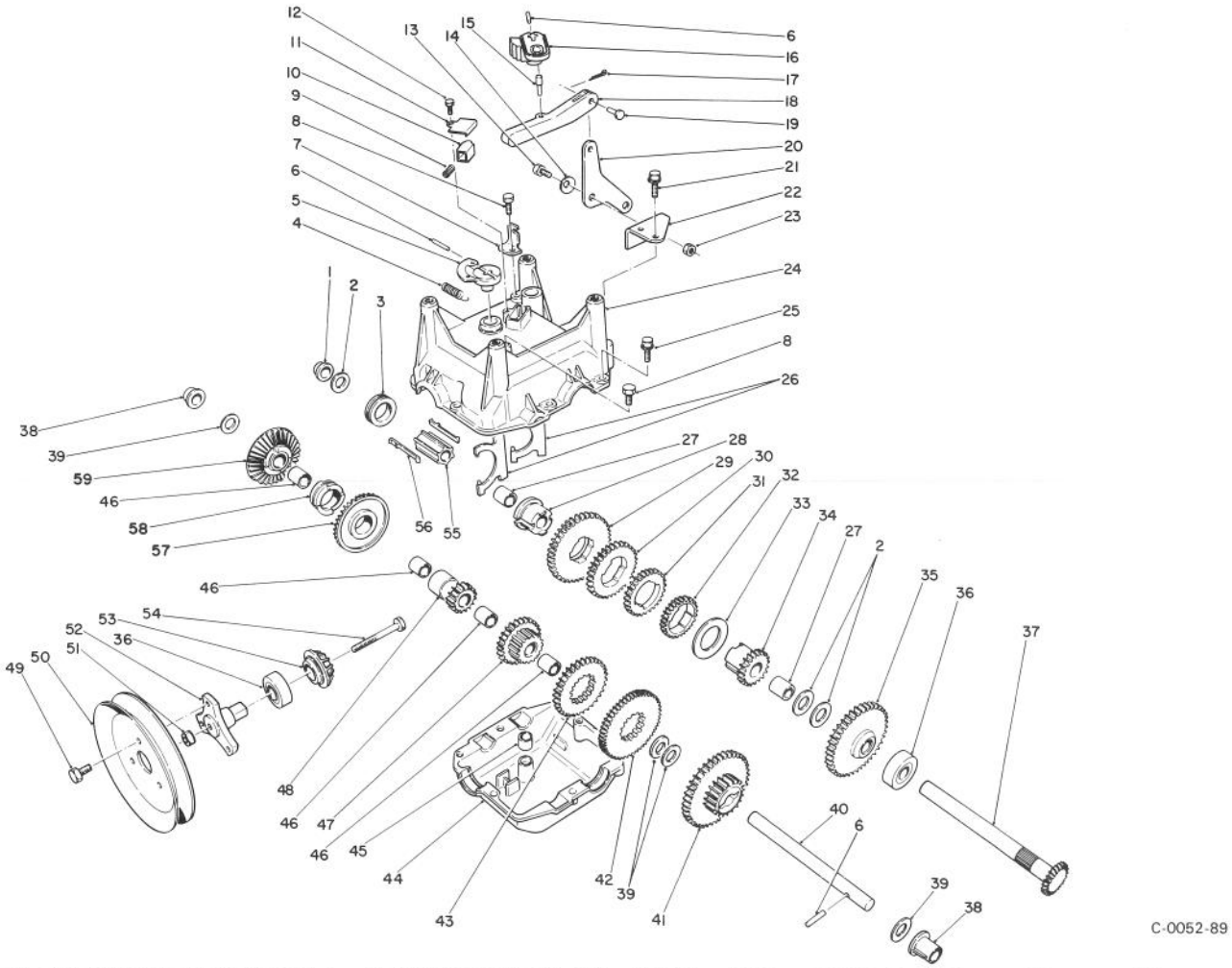

TRANSMISSION ASSEMBLY NO. 66-8030 (Continued)

Ref. No.	Part No.	Description	No. Used
45	29-9570	Bushing - Yoke	1
46	62-1160	Bushing - Intermediate	4
47	68-4310	Gear - 26T	1
48	62-0500	Gear - 15T	1
49	12-3270	Screw	3
50	62-1310	Pulley - Traction	1
51	32128-32	Nut - Flange Lock	1
52	62-0380	Hub - Pulley	1

Ref. No.	Part No.	Description	No. Used
53	62-0350	Pinion - Bevel 19T	1
54	321-15	Screw - Cap Hex Hd.	1
55	68-4320	Sleeve - Shift	1
56	62-0310	Key - Shift	2
57	67-5870	Gear - Bevel 36T	1
58	67-5880	Collar - Shift	1
59	13-3559	Gear - Bevel Reverse 36T (Incl. Ref. #46)	1

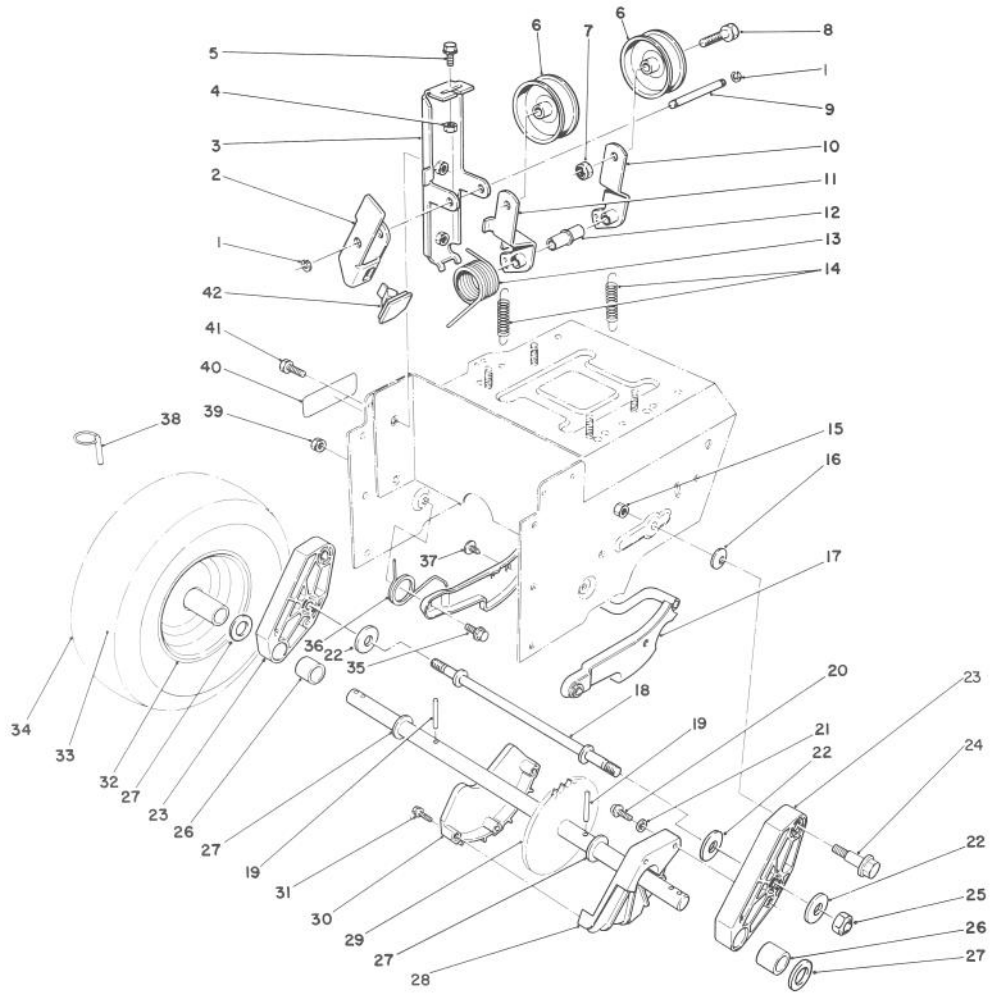

TRACTION DRIVE ASSEMBLY

Ref. No.	Part No.	Description	No. Used
1	32120-46	Ring - Retaining	2
2	63-2810	Arm - Brake	1
3	63-2850	Bracket - Idler Arm	1
4	3296-42	Nut - Lock	1
5	3234-13	Screw - Hex. Washer Hd.	1
6	3-4244	Pulley - Idler	2
7	3296-59	Nut - Lock	2
8	323-7	Screw - Cap Hex Hd.	2
9	62-0970	Pin - Idler	1
10	62-1260	Arm - Traction Idler	1
11	62-1280	Arm - Impeller Idler	1
12	62-1210	Bushing - Idler	1
13	63-2880	Spring - Torsion	1
14	63-2870	Spring - Extension	2
15	3296-39	Nut - Lock	2
16	3290-461	Washer - Belleville	2
17	62-0470	Latch - Arm	1
18	66-7720	Rod - Latch	1
19	32121-9	Pin - Roll	2
20	32144-4	Screw - Hex Flange Hd.	2
21	3256-1	Washer - Flat	2
22	63-3340	Washer	4
23	66-7740	Pivot Arm Assembly (Incl. Ref. # 26)	2
24	62-1330	Bolt - Shoulder	2

Ref. No.	Part No.	Description	No. Used
25	3296-23	Nut - Lock	2
26	63-2250	Bushing - Axle	2
27	252-80	Washer - Thrust	4
28	62-1010	Guard - Chain L.H.	1
29	63-2110	Axle Assembly	1
30	62-1000	Guard - Chain R.H.	1
31	32104-118	Screw - Hex Flange Hd.	3
32	241-128	Rim - Wheel	2
33	232-46	Tube - Inner	2
34	231-120	Tire	2
35	5-2490	Bolt - Shoulder	2
36	63-2740	Spring - Torsion	1
37	3290-476	Fastener - Panel	1
38	3290-243	Pin - Klik	2
39	3296-47	Nut - Lock	2
40	63-3460	Decal - Adjustment (Model No. 38520)	1
*	63-3470	Decal - Adjustment (Model No. 38525)	1
41	3234-7	Screw - Hex Flange Hd.	2
42	66-8060	Pad - Brake	1
*	67-9220	Wheel & Tire Assembly (Incl. Ref. #32-34)	1
*	56-2700	Tire Chains Kit (Optional)	1

*Not Illustrated

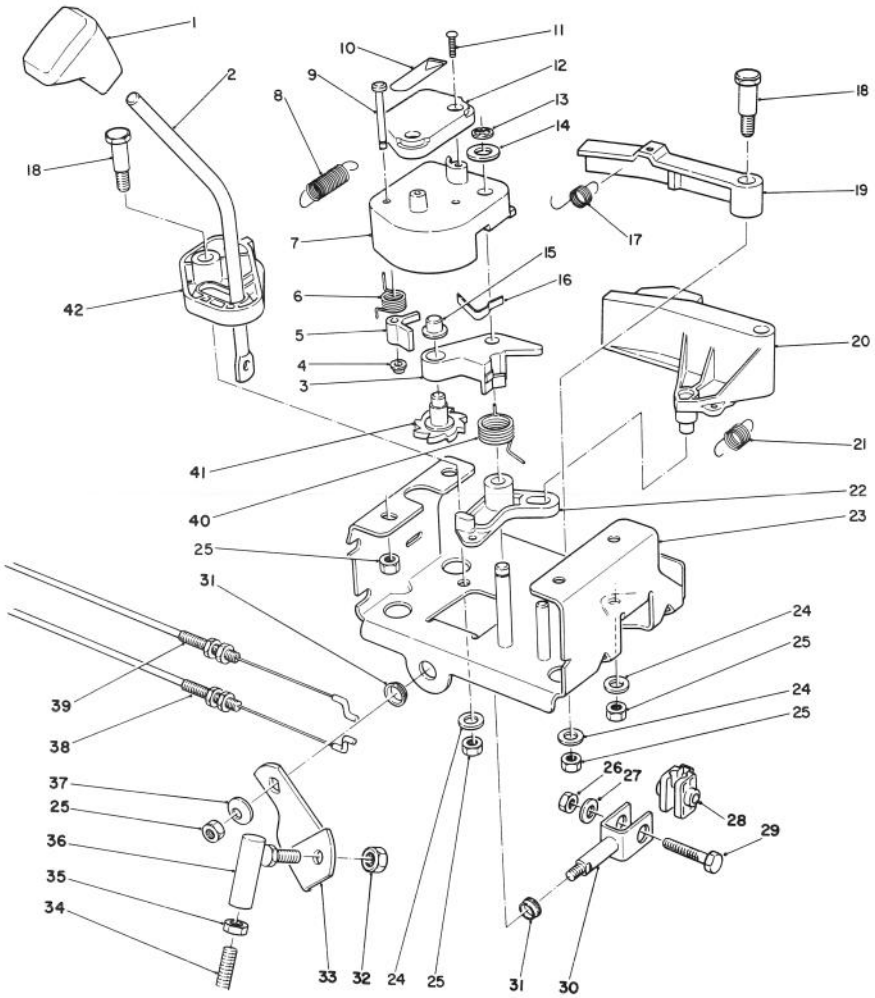

C-0054-89

TRACTION LINKAGE ASSEMBLY

Ref. No.	Part No.	Description	No. Used
1	62-1290	Knob - Shift	1
2	67-9240	Rod - Shift (Upper)	1
3	62-1110	Lever - Index Wheel	1
4	3290-422	Nut - Push	1
5	62-0180	Tang - Index	1
6	62-1650	Spring - Torsion	1
7	62-1100	Lever - Latch	1
8	63-2220	Spring - Extension (Latch Lever)	1
9	63-2610	Pin - Tang	1
10	63-2480	Decal - #2	1
11	32104-118	Screw - Pan Hd.	2
12	62-1140	Cover - Latch	1
13	32120-46	Ring - Retaining	1
14	257-9	Washer - Thrust	1
15	3290-320	Nut - Push	1
16	62-1710	Spring - Flat	1
17	63-2240	Spring - Extension (Lockout)	1
18	63-2650	Screw - Shoulder	2
19	62-1700	Lever - Lockout	1
20	62-1130	Lever - Reverse	1

Ref. No.	Part No.	Description	No. Used
21	63-2230	Spring - Extension (Reverse Lever)	1
22	62-1120	Lever - Reverse	1
23	63-2150	Frame - Control	1
24	3256-23	Washer - Flat	3
25	3296-29	Nut - Lock	7
26	3296-42	Nut - Lock	1
27	3256-1	Washer - Flat	1
28	67-9250	Retainer - Shift Rod	1
29	321-43	Screw - Cap Hex. Hd.	1
30	66-7730	Clevis	1
31	256-296	Bushing - Nyliner	2
32	3296-39	Nut - Lock	1
33	63-2630	Bracket - Shift	1
34	63-2620	Rod - Shift (Lower)	1
35	3220-3	Nut - Jam	2
36	63-2640	Joint - Ball	1
37	3290-456	Washer - Belleville	1
38	63-2210	Cable - Gearbox	1
39	63-2200	Cable - Latch	1
40	63-2270	Spring - Torsion	1
41	62-0170	Wheel - Index	1
42	62-1470	Base - Lockout	1

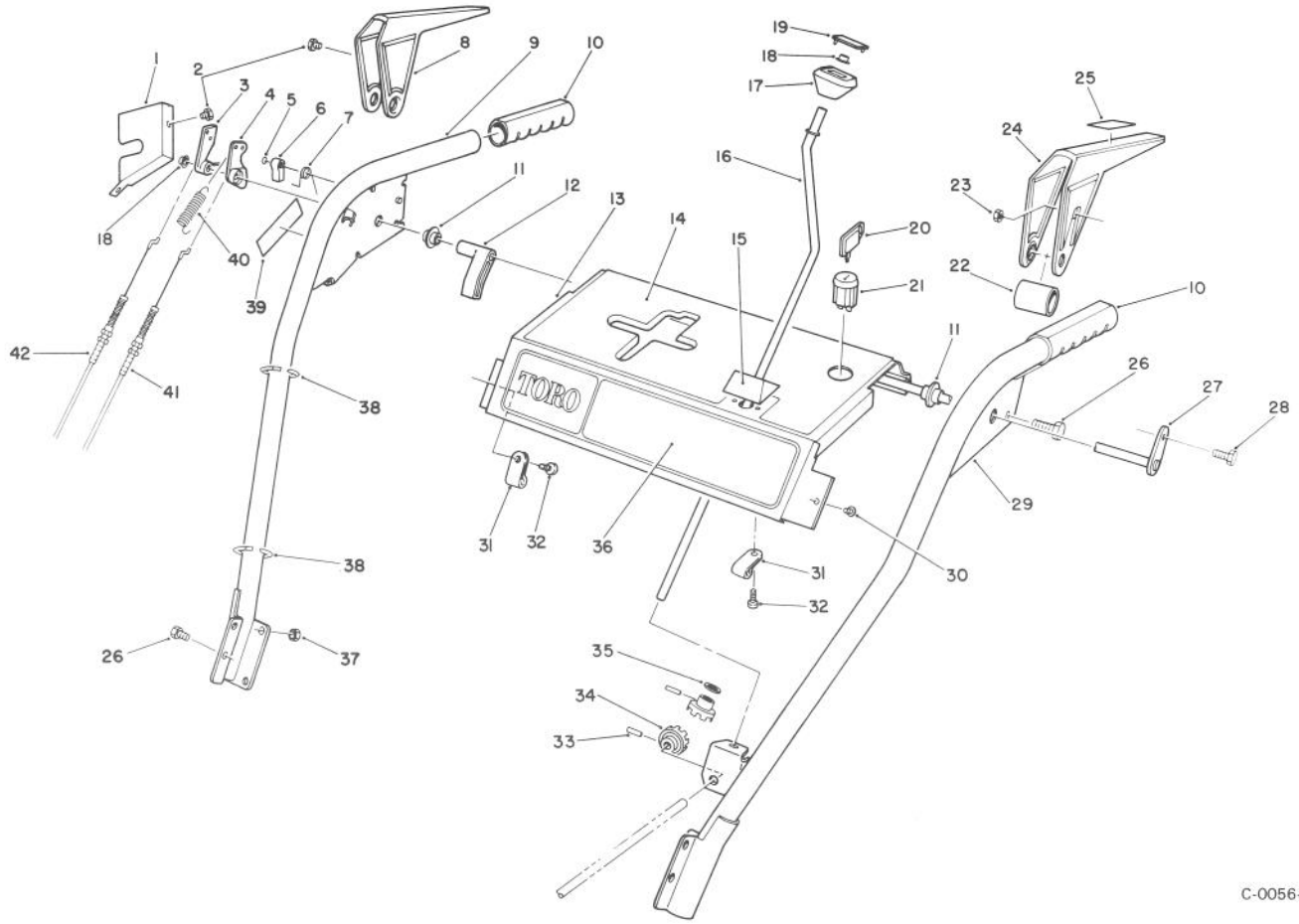

HANDLE ASSEMBLY

Ref. No.	Part No.	Description	No. Used
1	63-2170	Cover - Lever Lock	1
2	2210-250	Screw	3
3	62-0300	Tang - Locking	1
4	62-0290	Cam - Release	1
5	32151-66	Ring - Retaining	1
6	62-0280	Latch - Lock	1
7	63-2910	Spring - Torsion	1
8	62-1050	Lever - Impeller	1
9	62-1380	Handle - R.H.	1
10	66-7850	Handlegrip	2
11	62-1070	Bushing - Lever	2
12	62-1640	Lever - Trip	1
13	66-8100	Panel - Control	1
14	63-2540	Decal - Panel Top (Model No. 38520)	1
*	63-2550	Decal - Panel Top (Model No. 38525)	1
15	62-1490	Plate - Guide	1
16	63-2160	Rod - Chute Crank	1
17	62-1320	Knob - Chute Control	1
18	3290-320	Nut - Push	2
19	62-1520	Cover - Knob	1
20	62-7770	Key - Switch	1
21	40-5940	Switch - On/Off	1
22	63-3380	Spacer - Traction Lever	1

Ref. No.	Part No.	Description	No. Used
23	3296-2	Nut - Lock	1
24	62-1060	Lever - Traction	1
25	63-3050	Decal - Lever (Model No. 38520 Only)	1
26	3234-7	Screw - Hex Flange Hd.	6
27	63-2030	Rod - Cross	1
28	3290-359	Screw	1
29	66-8090	Handle - L.H.	1
30	32104-76	Screw - Self Tapping	2
31	2412-101	Clip - Wire	2
32	32104-118	Screw - Pan Hd.	2
33	32121-50	Pin - Roll	2
34	62-1460	Gear - Universal	2
35	62-1230	Washer - Rubber	1
36	63-2510	Decal - Panel Front	1
37	3296-47	Nut - Lock	4
38	3290-378	Tie - Cable	2
39	63-3460	Decal - Adjustment (Model No. 38520)	1
*	63-3470	Decal - Adjustment (Model No. 38525)	1
40	63-2720	Spring - Extension	1
41	63-2710	Cable - Traction	1
42	63-2700	Cable - Impeller	1
*	63-3430	Harness - Wire	1

*Not Illustrated

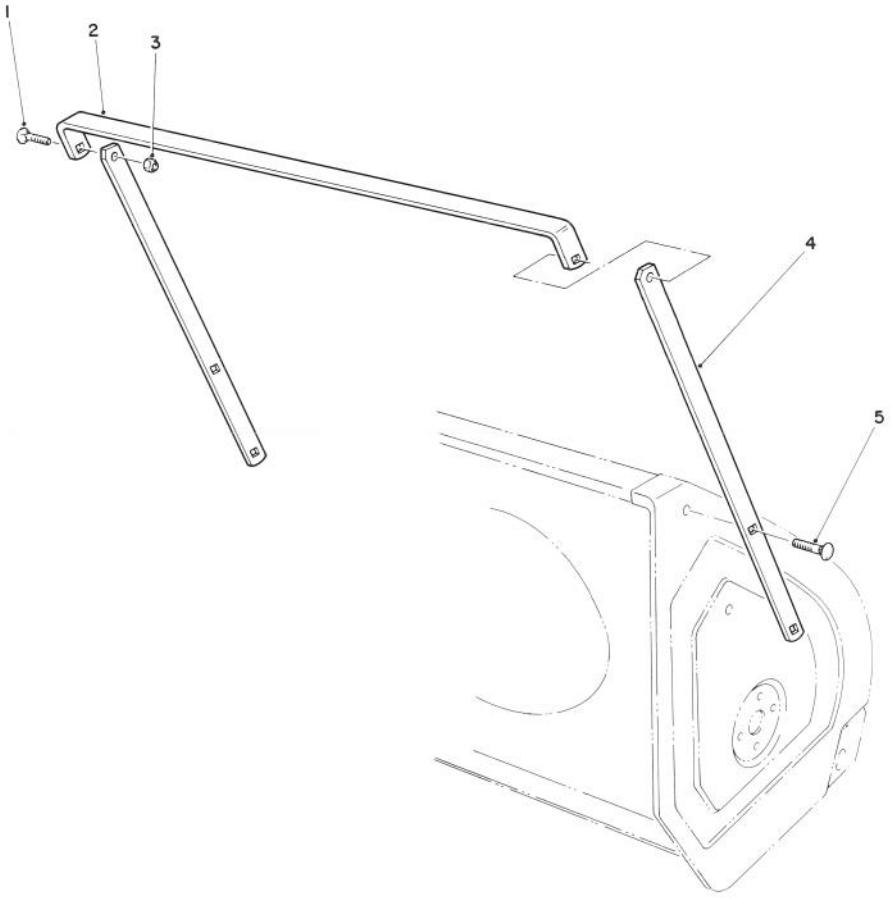

C-0068-89

DRIFT BREAKER ASSEMBLY (Optional)

Ref. No.	Part No.	Description	No. Used
1	3230-16	Bolt - Carriage	2
†2		Breaker - Top (28")	1
3	3296-29	Nut - Lock	6
†4		Breaker - Side	2

Ref. No.	Part No.	Description	No. Used
5	3230-1	Bolt - Carriage	4
*	66-7970	Drift Breaker Kit (Incl. Ref. #1-5)	1

*Not Illustrated
†Items not sold separately.

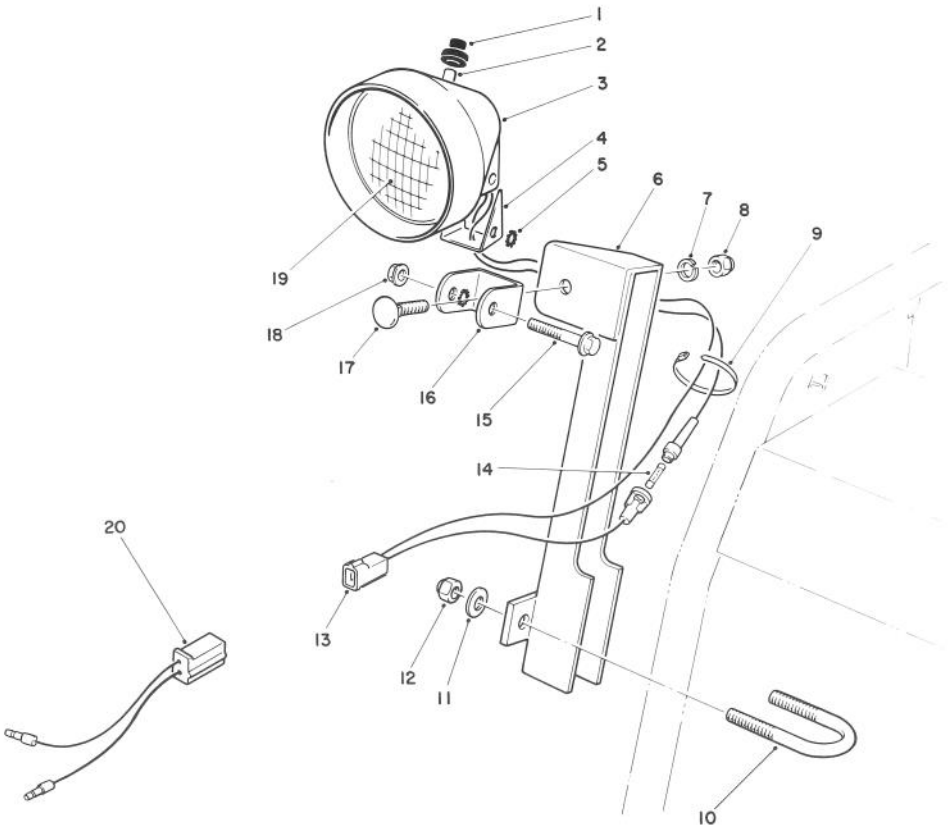

C-0072-89

LIGHT KIT NO. 66-7950 (Optional)

Ref. No.	Part No.	Description	No. Used
1	218-473	Boot - Switch	1
2	218-553	Switch Assembly	1
3	218-552	Bucket - Headlamp	1
4	218-554	Bracket	1
5	3255-8	Washer - Lock	2
6	68-7110	Mount - Lamp	1
7	3253-21	Washer - Lock	1
8	3217-7	Nut - Hex.	1
9	3290-378	Tie Wrap	2
10	68-7140	Bolt - U	1
11	3256-23	Washer - Flat	2

Ref. No.	Part No.	Description	No. Used
12	3296-29	Nut - Lock	2
13	218-555	Wire Assembly	1
†14		Fuse - 7-1/2 Amp.	1
15	322-13	Screw - Hex. Flange Hd.	1
16	218-556	Bracket - U	1
17	3231-2	Bolt - Carriage	1
18	32128-35	Nut - Flange Lock	1
19	218-16	Bulb - Sealed Beam	1
20	68-9340	Wire Assembly	1
*	54-9871	Headlamp Assembly (Incl. Ref. #1-5, 7-8 & 13-19)	1

*Not Illustrated
†Obtain Locally

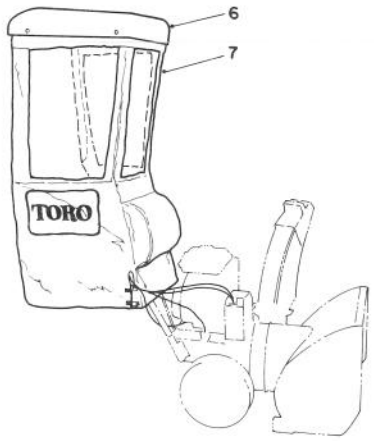

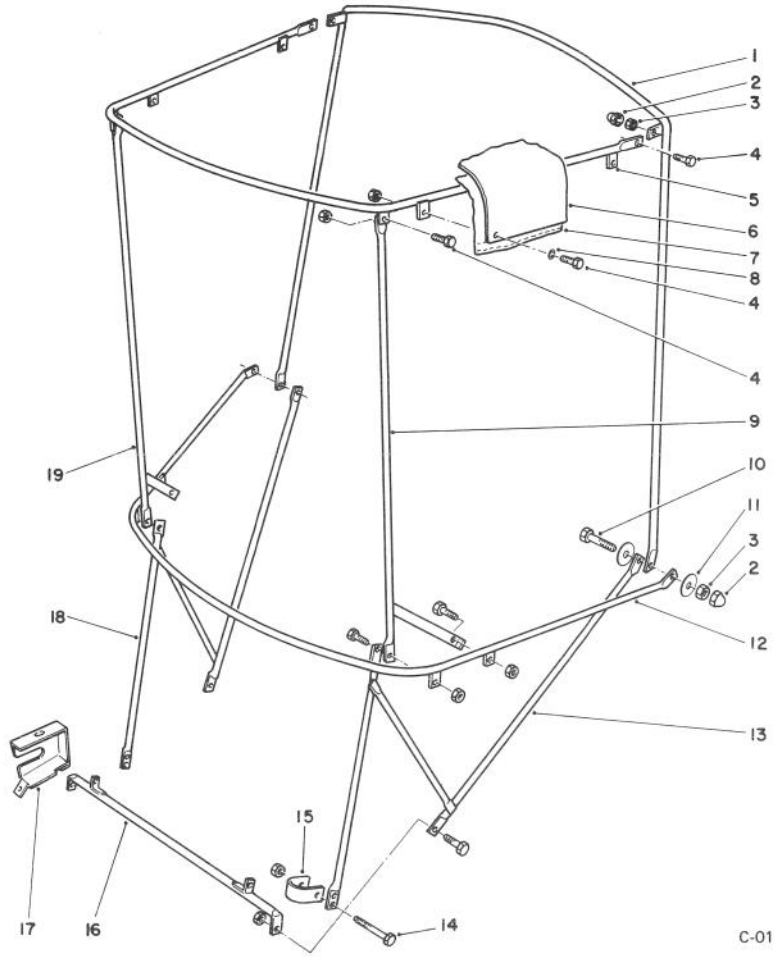

C-0138-89

SNOW CAB ASSEMBLY NO. 68–9500 (Optional)

Ref. No.	Part No.	Description	No. Used
1	70–2260	Bow – Vertical	1
2	70–2240	Cover – Nut	4
3	32153–4	Nut – Lock	18
4	321–4	Screw – Cap Hex. Hd.	14
5	70–2250	Frame – Top	1
†6		Top – Plastic	1
†7		Cover – Vinyl	1
8	3256–1	Washer – Flat	4
9	70–2220	Post – Corner L.H.	1
10	321–6	Screw – Cap Hex. Hd.	2

Ref. No.	Part No.	Description	No. Used
11	3256–58	Washer – Fender	4
12	70–2270	Bow – Horizontal	1
13	66–6230	Bracket – Attaching L.H.	1
14	321–11	Screw – Cap Hex. Hd.	2
15	66–6240	Clamp – U	2
16	66–6210	Bracket – Base Attaching	1
17	63–3330	Cover – Lever	1
18	66–6220	Bracket – Attaching R.H.	1
19	70–2230	Post – Corner R.H.	1

†Not sold separate

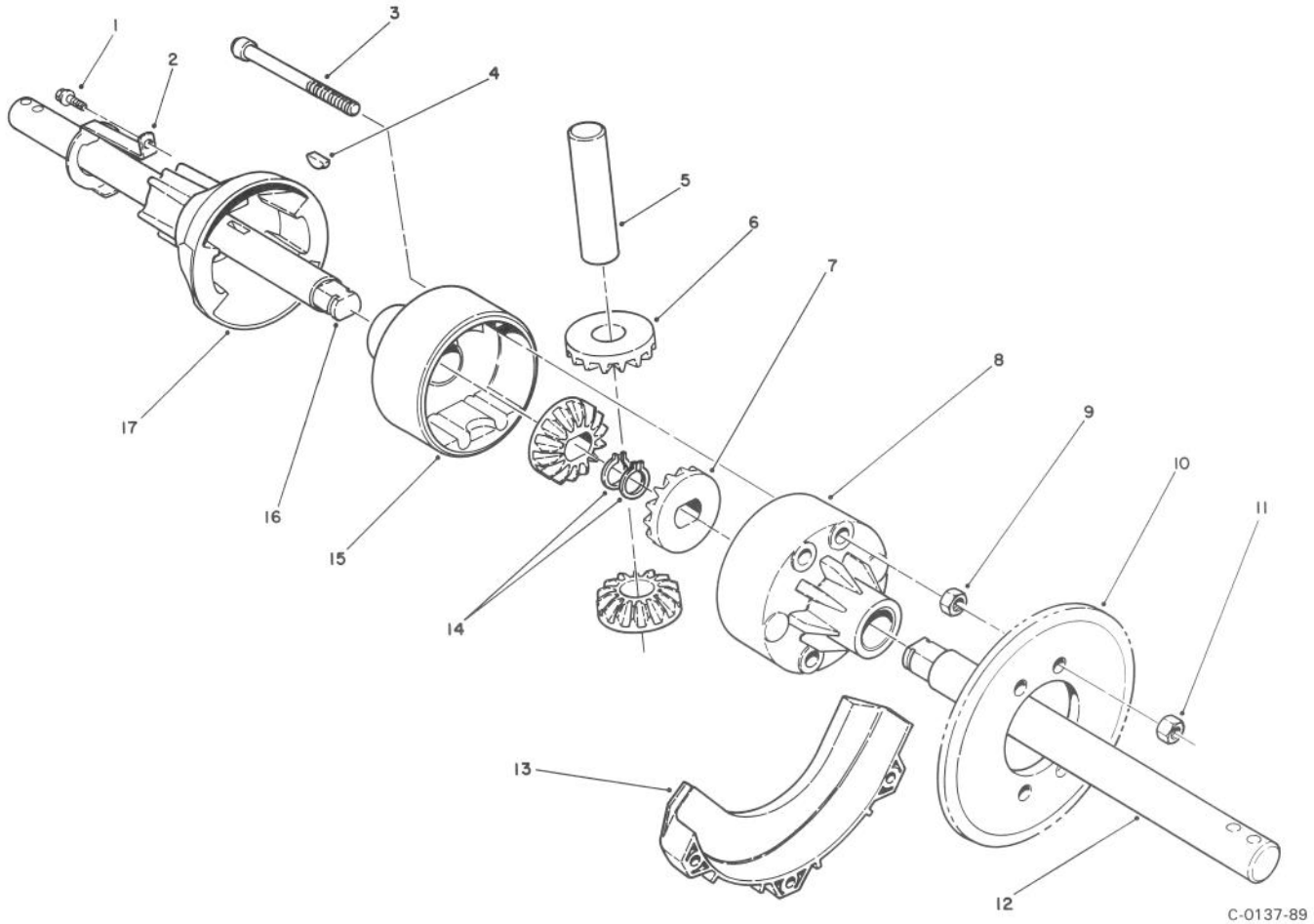

DIFFERENTIAL KIT MODEL NO. 38038 (Optional)

Ref. No.	Part No.	Description	No. Used
1	32144-73	Screw - Hex. Washer Hd.	1
2	68-9260	Spring - Lockout	1
3	3274-82	Screw - Hex. Socket Hd.	4
4	3257-41	Key - Woodruff	2
5		Shaft - Cross	1
6		Gear - Cross Shaft Pinion	2
7		Gear - Side Pinion	2
8	68-9220	Housing - Female	1
9	3217-6	Nut - Hex.	4
10	68-9271	Sprocket - 27T (Used on Models 38510, 38513, 38540 & 38543)	1
*	68-9270	Sprocket - 32T (Used on Models 38500, 38505, 38520, 38525, 38545, 38565, 38570, 38573 & 38580)	1

Ref. No.	Part No.	Description	No. Used
11	3296-47	Nut - Lock	4
12	68-9230	Shaft - Differential L.H.	1
13	68-9310	Guard - Chain R.H.	1
14	32120-93	Ring - Retaining	2
15	68-9210	Housing - Male	1
16	68-9240	Shaft - Differential R.H.	1
17	68-9250	Coupling - Differential	1
*	68-8410	Cover - Lower Belt	1
*	68-9390	Decal - Caution/Instructions	1
*	68-9280	Gear Set (Incl. Ref. #5-7)	1

*Not Illustrated

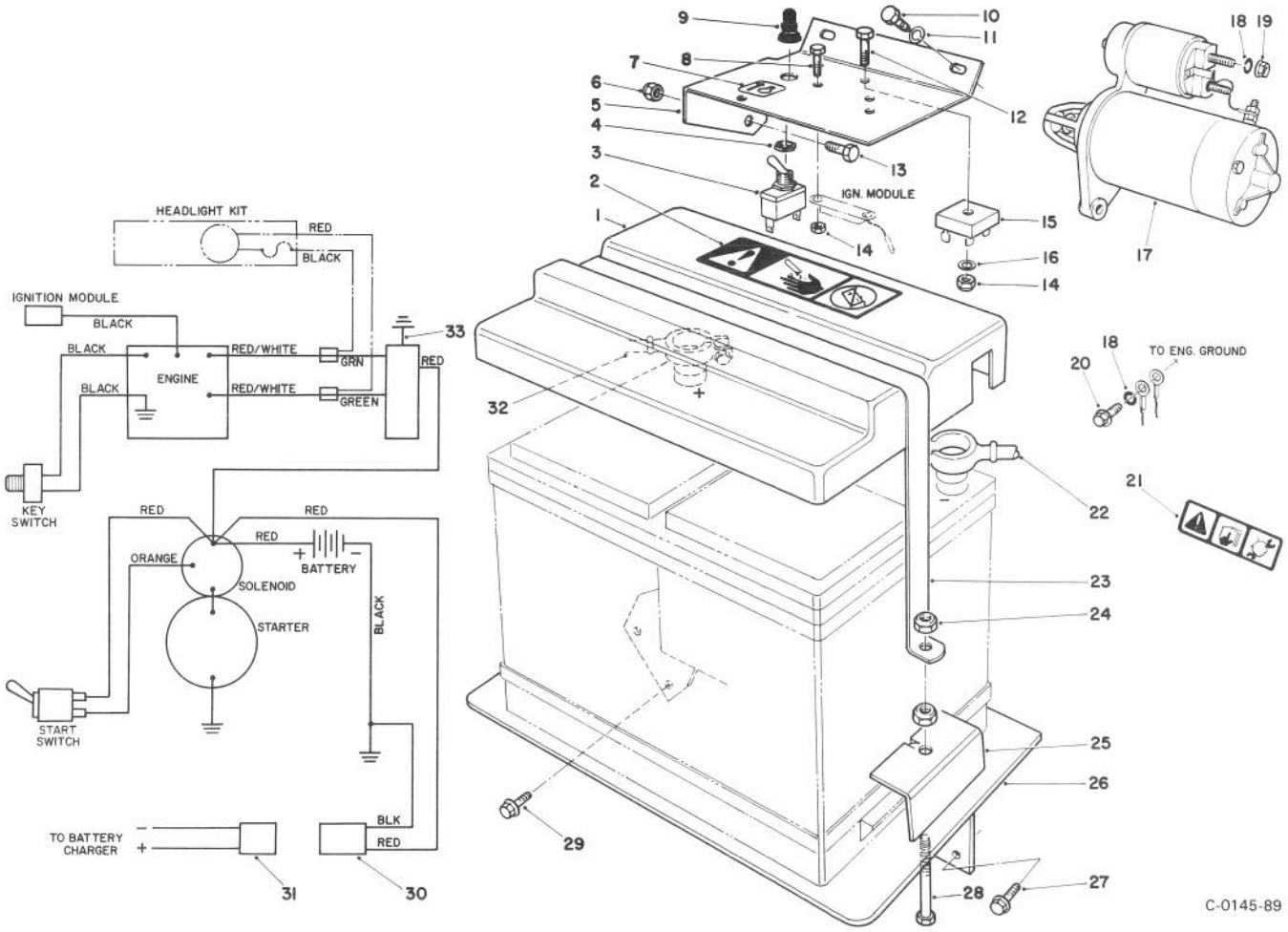

12 VOLT STARTER MOTOR KIT NO. 68-7250 (Optional)

Ref. No.	Part No.	Description	No. Used
1	22-8900	Cover - Battery	1
2	66-7640	Decal - Battery Cover	1
3	6-1659	Switch (Incl. Ref. #4 & 9)	1
4	218-498	Nut - Hex.	1
5	68-9360	Bracket - Mounting	1
6	81-0130	Nut - Flange Lock	1
7	68-9490	Decal - Starter Switch	1
8	32105-8	Screw - Cap Hex. Hd.	2
9	218-473	Boot - Switch	1
10	46-0050	Screw - Cap Hex. Hd.	2
11	48-8020	Washer - Lock	2
12	32105-12	Screw - Cap Hex. Hd.	1
13	46-0051	Screw - Cap Hex. Hd.	1
14	3296-2	Nut - Lock	3
15	37-7600	Rectifier	1
16	3256-51	Washer - Flat	1
17	68-9330	12 Volt Starter Motor Assy.	1
18	68-9420	Washer - Lock	2
19	68-9400	Nut - Flange Lock	1

Ref. No.	Part No.	Description	No. Used
20	68-9410	Screw - Hex. Flange Hd.	1
21	63-3470	Decal - Warning	1
22	68-9350	Cable - Battery Negative	1
23	22-8850	Strap - Battery	1
24	3296-29	Nut - Lock	4
25	22-8870	Hold-Down - Battery	2
26	66-7600	Plate - Battery Mounting	1
27	3234-17	Screw - Hex. Flange Hd.	2
28	322-11	Screw - Cap Hex. Hd	2
29	3234-5	Screw - Hex. Flange Hd.	2
30	68-9380	Charging Wire Assembly	1
31	29-7820	Charging Adapter Wire Assy.	1
32	68-9320	Cable - Battery Positive	1
33	68-9450	Wire - Rectifier Ground	1
*†	26-7140	Charger - 220V (Europe)	1
*†	26-3870	Charger - 110V (Canada)	1
*	68-9370	Wiring Assembly	1
*	3290-378	Tie Wrap	2

*Not Illustrated

†Item not included in kit, must be ordered seperately.

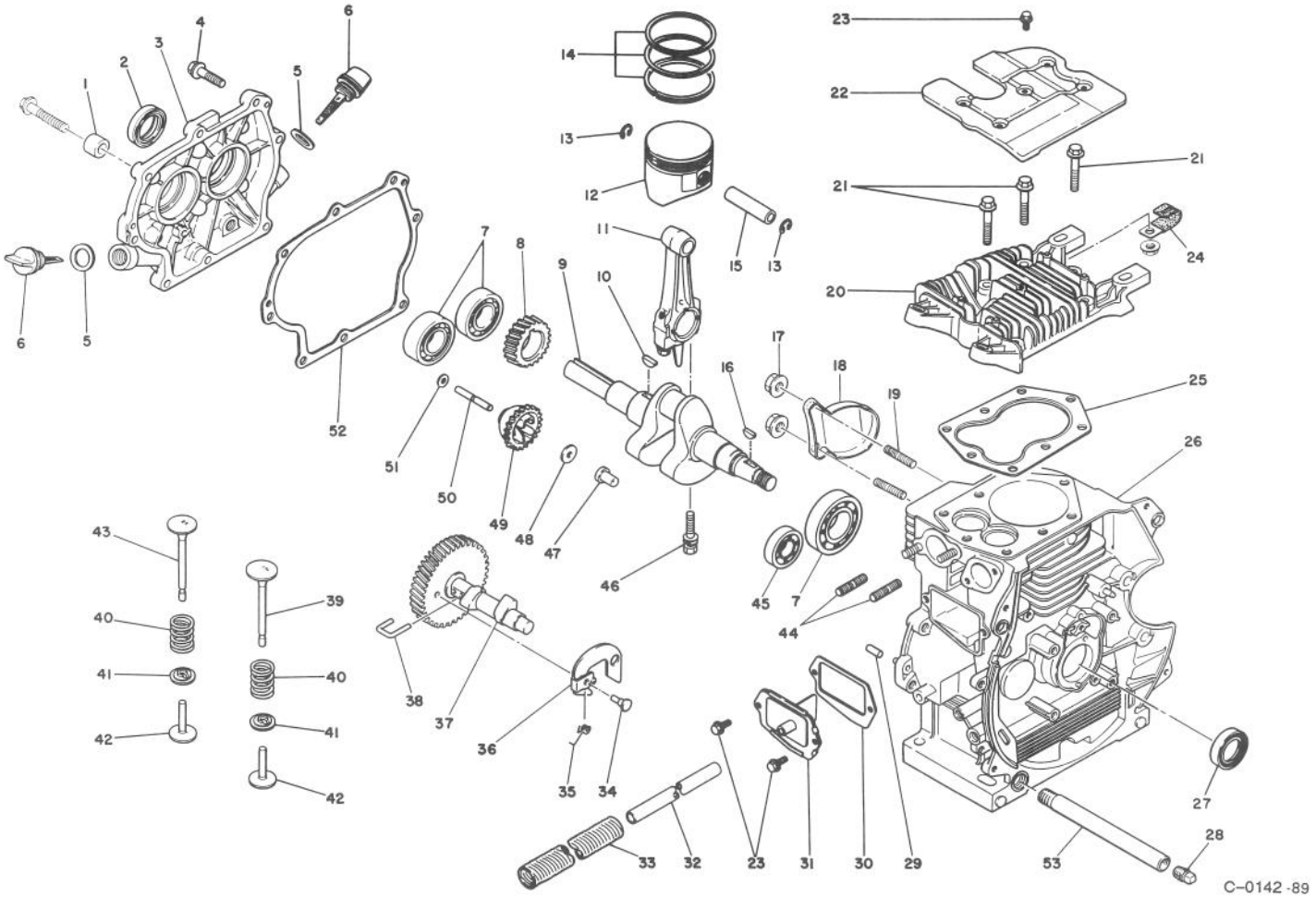

ENGINE NO. 68-8290 CRANKCASE ASSEMBLY

Ref. No.	Part No.	Description	No. Used
1	65-2390	Spacer	1
2	65-2140	Seal - Oil	1
3	65-2150	Cover - Crankcase	1
4	65-0480	Bolt - Flange	7
5	65-0510	Gasket	2
6	65-0500	Gauge - Oil (Incl. Ref. #5)	2
7	65-0030	Bearing - Ball	3
8	65-0170	Gear - Crankshaft	1
9	65-1930	Crankshaft	1
10	65-0180	Key - Woodrufff	1
11	65-2100	Connecting Rod Assembly (Std.) (Incl. Ref #46)	1
*	65-2110	Connecting Rod Assembly (US. .25) (Incl. Ref #46)	1
*	65-2120	Connecting Rod Assembly (US. .50) (Incl. Ref. #46)	1
12	65-2050	Piston Assembly (Std.) (Incl. Ref. #15)	1
13	65-2040	Clip - Piston Pin	2
14	65-1990	Piston Ring Set (Std.)	1
15	65-2130	Pin - Piston	1
16	65-0200	Key - Woodruff	1
17	65-1710	Nut - Flange Lock	2
18	71-1630	Cover	1

Ref. No.	Part No.	Description	No. Used
19	71-1880	Bolt - Stud	2
20	65-1890	Head - Cylinder	1
21	65-0130	Bolt - Head	8
22	65-0120	Cover - Head	1
23	65-0050	Bolt - Flange	3
24	65-0160	Clamp - Cable	1
†25	65-1920	Gasket - Head	1
26	71-1800	Cylinder Block Assembly (Incl. Ref. #19, 29 & 44)	1
27	65-0110	Seal - Oil	1
28	281-7	Plug - Drain	1
29	65-0080	Pin - Dowel	2
†30	65-0070	Gasket - Breather	1
31	65-0060	Breather Valve Assembly	1
32	65-0770	Tube - Breather	1
33	71-1890	Tube	1
34	65-0310	Pin	1
35	65-0300	Spring - Return	1
36	65-0290	Flyweight	1
37	65-1970	Camshaft Assembly (Incl. Ref. #34-36 & 38)	1
38	65-1980	Pin	1
39	65-1960	Valve - Intake	1
40	65-0230	Spring - Valve	2

*Not Illustrated
†Included in Gasket Kit No. 65-2350

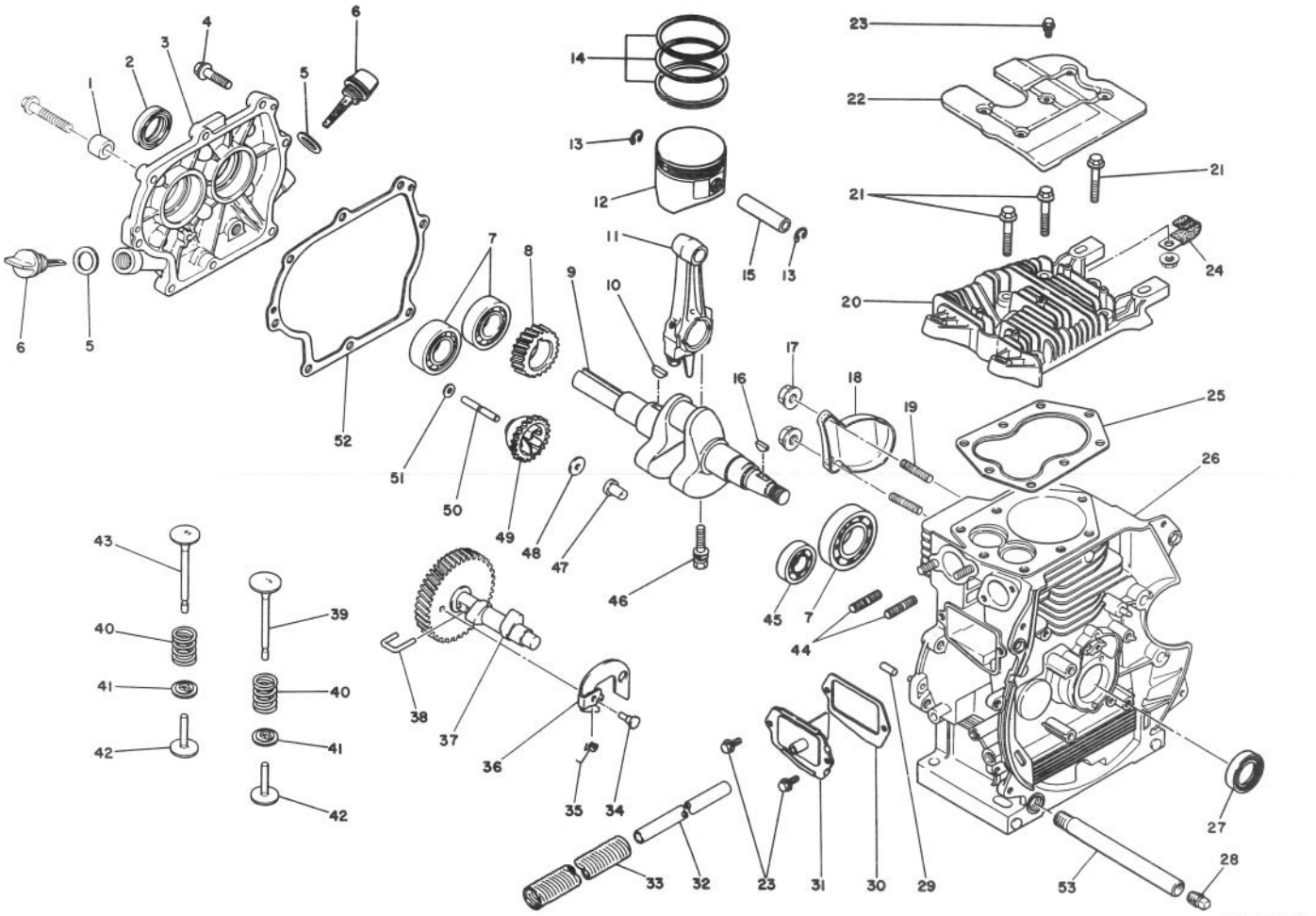

ENGINE NO. 68-8290 CRANKCASE ASSEMBLY (Continued)

Ref. No.	Part No.	Description	No. Used
41	65-0240	Retainer - Valve Spring	2
42	65-0250	Tappet - Valve	2
43	65-1950	Valve - Exhaust	1
44	65-0020	Bolt - Stud	2
45	65-0040	Bearing - Ball	1
46	65-0460	Bolt - Connecting Rod	2
47	65-0570	Slider - Governor	1

Ref. No.	Part No.	Description	No. Used
48	65-0580	Spacer	1
49	65-0560	Governor Gear Assembly (Incl. Ref. #47)	1
50	65-0550	Shaft - Governor	1
51	65-0540	Washer	1
†52	65-2160	Gasket - Crankcase	1
53	66-6690	Nipple - Pipe	1

†Included in Gasket Kit No. 65-2350

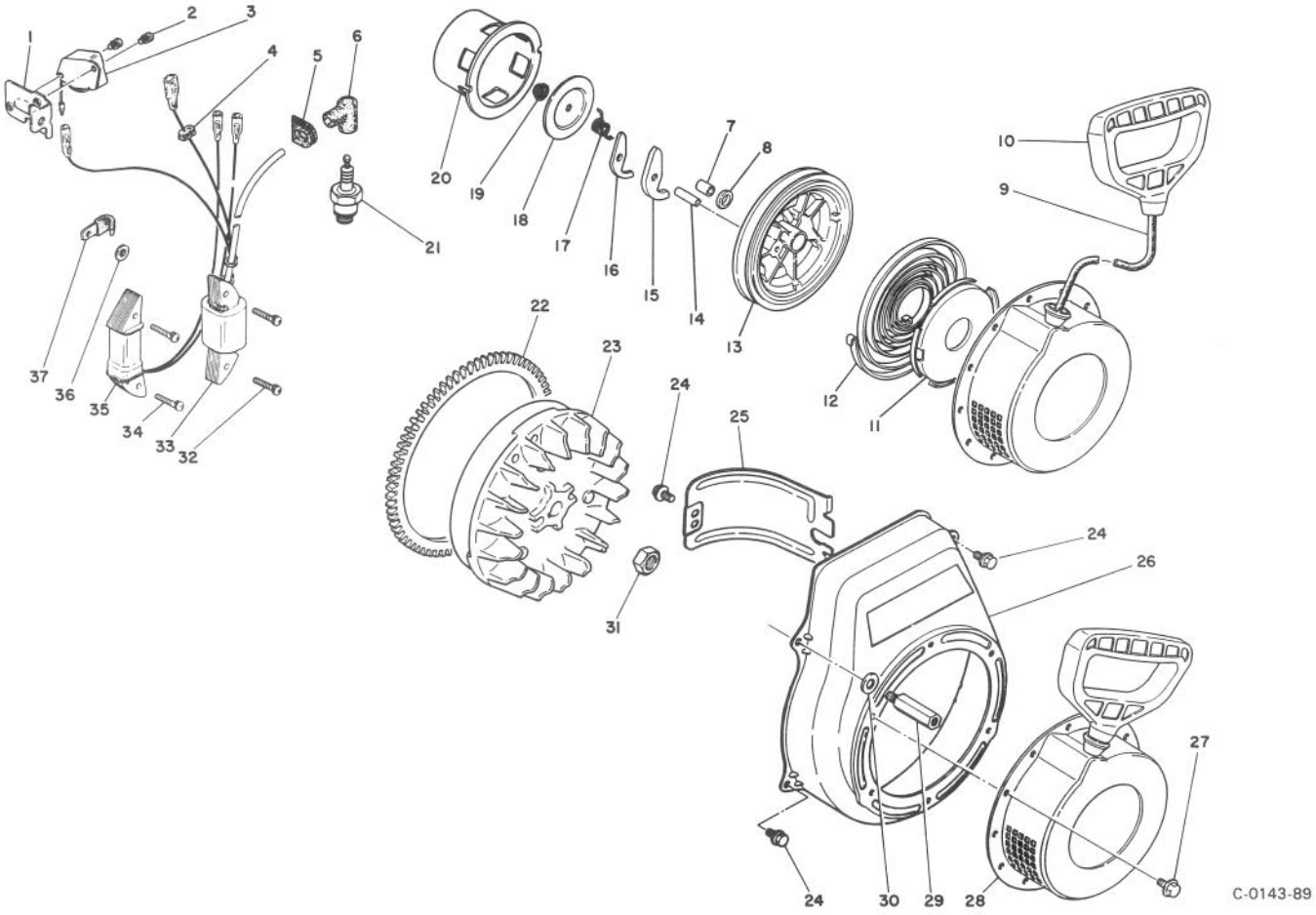

ENGINE NO. 68–8290 IGNITION ASSEMBLY

Ref. No.	Part No.	Description	No. Used
1	65–1830	Bracket – Unit	1
2	54–4610	Screw & Washer	2
3	65–2370	Unit – Ignition	1
4		Grommet	1
5	65–0630	Grommet	1
6	65–0620	Cap – Plug	1
7	65–1540	Shaft	1
8	65–1550	Washer	1
9	65–1660	Rope – Starter	1
10	65–1670	Handle – Starter	1
11	65–1650	Case	1
12	65–1640	Spring – Spiral	1
13	65–1630	Reel	1
14	65–1620	Pin	1
15	65–1610	Ratchet	1
16	65–1600	Ratchet	1
17	65–1590	Spring – Friction	1
18	65–1580	Plate – Friction	1
19	65–1570	Nut – Flange	1

Ref. No.	Part No.	Description	No. Used
20	65–1560	Pulley – Starter	1
21	65–0640	Plug – Spark	1
22	65–2360	Gear – Ring	1
23	65–2180	Flywheel	1
24	65–0050	Bolt – Flange	4
25	65–0750	Baffle – Cylinder	1
26	71–1770	Cover – Fan	1
27	65–0840	Bolt – Flange	3
28	65–1530	Recoil Starter Assembly (Incl. Ref. #7–20)	1
29	65–1880	Bolt – Shoulder	1
30	65–0540	Washer	1
31	65–2200	Nut	1
32	65–0710	Screw & Washer	2
33	65–2380	Coil – Ignition (Incl. Ref. #4)	1
34	54–5760	Screw & Washer	2
35	65–2400	Coil – Lighting	1
36	65–0730	Nut – Push	1
37	65–0740	Clamp – Cable	1

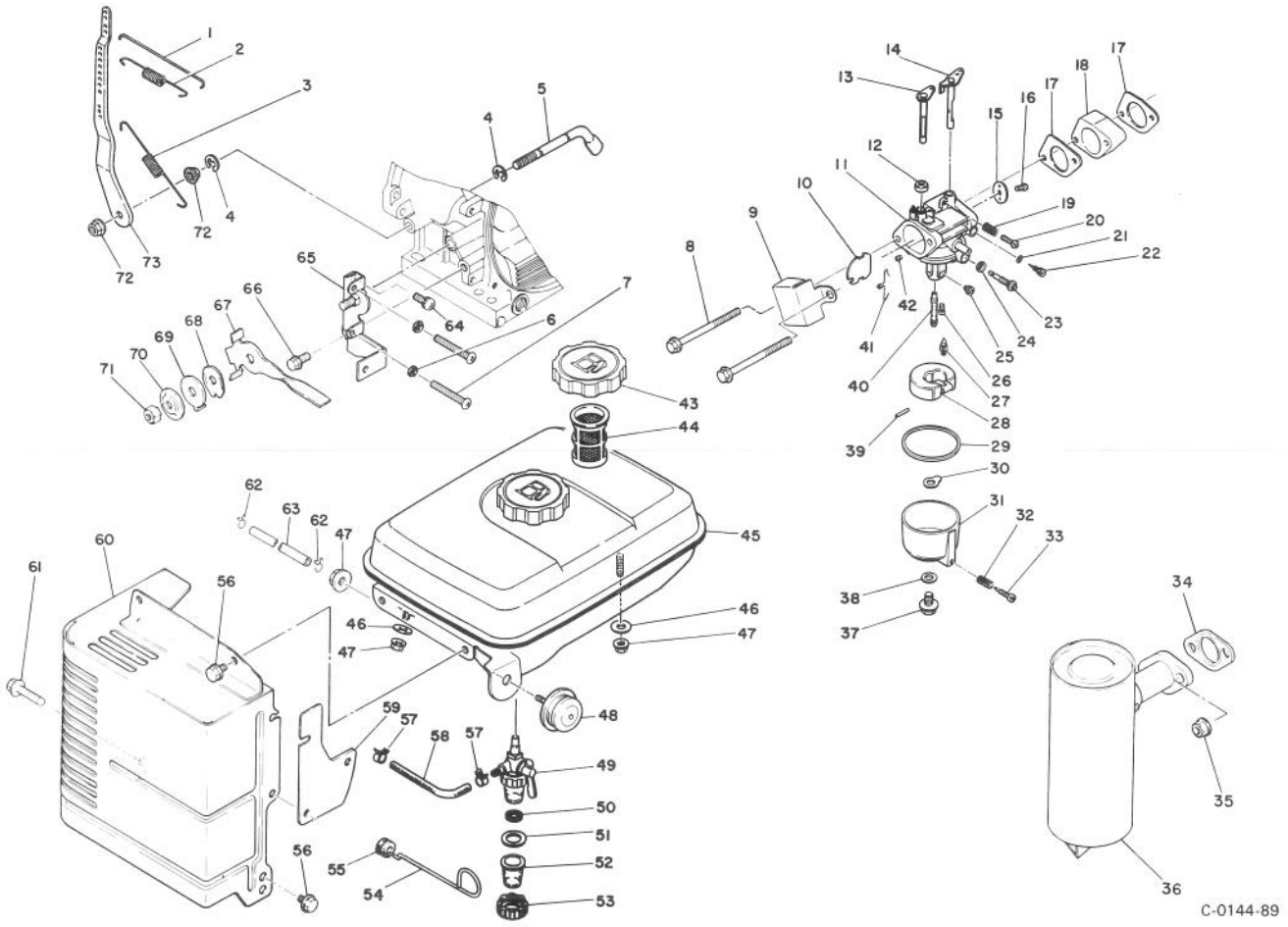

ENGINE NO. 68-8290 FUEL SYSTEM & MUFFLER

Ref. No.	Part No.	Description	No. Used
1	65-0870	Rod - Governor	1
2	65-0880	Spring - Rod	1
3	71-1760	Spring - Governor	1
4	65-0860	Ring - Snap	2
5	65-0850	Shaft - Governor	1
6	65-1010	Nut	2
7	65-1020	Screw - Machine Pan Hd.	2
8	65-1370	Bolt - Flange	2
9	65-1380	Cover	1
10	71-1840	Valve - Choke	1
11	71-1810	Carburetor Assembly (Incl. Ref. #10-16, 19-33 & 37-42)	1
12	65-1250	Cap	1
13	71-1670	Shaft - Choke	1
14	65-2220	Shaft - Throttle	1
15	65-2230	Valve - Throttle	1
16	65-1130	Screw - Throttle Valve	2
†17	65-1080	Gasket - Carburetor	2
18	71-1650	Insulator - Carburetor	1
19	65-1140	Spring - Idle Stop	1
20	65-1150	Screw - Idle Stop	1
21	65-1170	Seal - O-Ring	1

Ref. No.	Part No.	Description	No. Used
22	65-2470	Valve - Needle (Incl. Ref. #21)	1
23	65-2260	Jet - Slow	1
24	65-1190	Gasket	1
25	65-2280	Jet - Main	1
26	65-1210	Screw	1
27	65-1290	Valve	1
28	65-1300	Float	1
29	65-2300	Gasket - Float Bowl	1
30	65-1330	Gasket	1
31	65-1340	Bowl - Float (Incl. Ref. #32 & 33)	1
32	65-1220	Spring	1
33	65-1230	Screw	1
†34	65-2330	Gasket - Exhaust	1
35	54-4670	Nut - Flange Lock	2
36	71-1690	Muffler Assembly	1
37	65-2310	Plug - Float Bowl	1
38	65-1350	Gasket - Plug	1
39	65-1310	Pin - Float	1
40	65-2290	Nozzle - Main	1
41	65-1260	Clip	1

†Included in Gasket Kit No. 65-2350

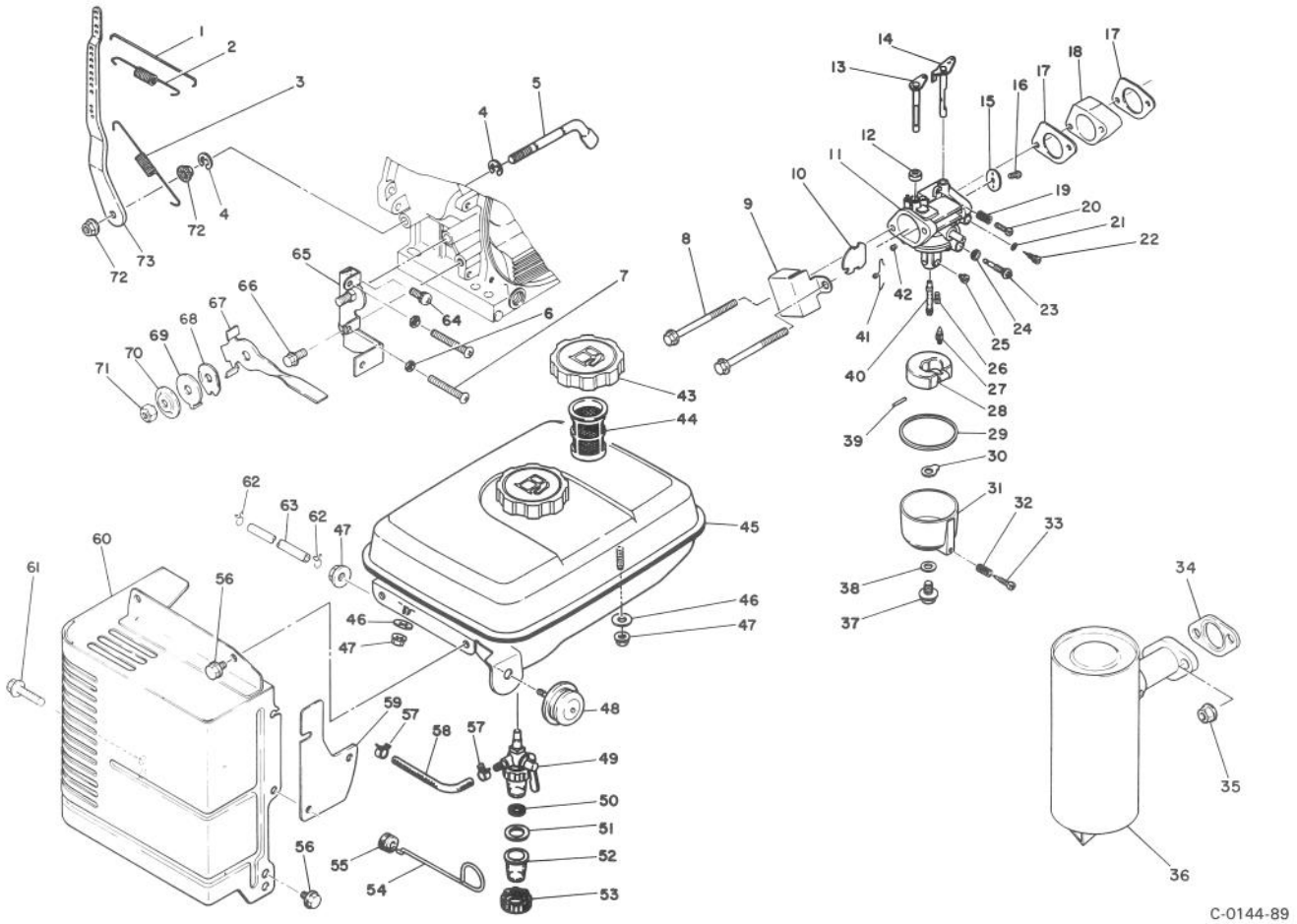

ENGINE NO. 68–8290 FUEL SYSTEM & MUFFLER (Cont.)

Ref. No.	Part No.	Description	No. Used
42	65–2320	Breather	1
43	65–1680	Cap – Fuel Tank	1
44	65–1690	Filter – Fuel	1
45	71–1820	Fuel Tank Assembly (Incl. Ref. #43, 44 & 46)	1
46	65–1700	Gasket	4
47	65–1710	Nut – Flange	5
48	65–2440	Primer Pump Assembly	1
49	71–1720	Petcock – Fuel (Incl. Ref. #50–53)	1
50	65–1770	Screen	1
51	65–1780	Gasket	1
52	65–1790	Cup	1
53	65–1800	Nut	1
54	71–1750	Rod – Choke	1
55	65–1430	Grommet	1
56	65–0050	Bolt – Flange	5

Ref. No.	Part No.	Description	No. Used
57	65–1720	Clip – Fuel Tube	2
58	71–1710	Tube – Fuel	1
59	65–2450	Cover – Engine	1
60	71–1830	Cover – Engine	1
61	65–2460	Bolt – Flange	1
62	71–1730	Clamp – Fuel Hose	2
63	71–1740	Hose – Fuel	1
64	65–2430	Screw & Washer	1
65	65–2420	Bracket	1
66	65–0990	Bolt – Flange	1
67	71–1640	Lever – Control	1
68	65–0800	Spring – Leaf	1
69	65–0810	Washer – Lock	1
70	65–0820	Washer	1
71	65–0830	Nut – Lock	1
72	65–0890	Nut – Flange	2
73	65–0910	Lever – Governor	1

PRODUCT CHANGES

In an effort to make improvements available to TORO owners as quickly as possible, minor changes are incorporated into Toro's products from time to time that do not become immediatly shown in the Parts Catalog. If such a change has been made in your unit, which is not reflected in your manual, see your TORO Distributor or his Authorized TORO Service Dealer for information and part numbers.

IDENTIFICATION AND ORDERING

MODEL AND SERIAL NUMBERS

The Snowthrower has two identification numbers; a model number and a serial number. The two numbers are stamped on a decal which is located on the rear of the engine frame. In any correspondence concerning the snowthrower, supply model and serial numbers to assure that correct information and replacement parts are obtaineed.

To order replacement parts from an Authorized TORO Service Dealer, supply the following information:
1. Model and serial number of the snowthrower.
2. Part number, description, and the quantity of part(s) desired.

NOTE: Do not order by reference number if a parts catalog is being used; use the PART NUMBER.

COUNTRIES OTHER THAN THE UNITED STATES OR CANADA

Customers who have purchased TORO products exported from the United States or Canada should contact thier Toro Distributor (Dealer) to obtain guarantee policies for your country, province or state. If for any reason you are dissatisfied with your Distributor's service or have difficulty obtaining guarantee information, contact the TORO importer. If all other remedies fail, you may contact us at The Toro Company.

MAINTENANCE RECORD

Date								

Compliance with Radio Interference Regulations Certified.
Certifie Conforme au Reglement sur le Brouillage Radioelectrique.

T.P.S
LTS-809043

Litho In USA