Form Number 3354-613 Rev A

# 22in Recycler® Lawnmower

**Model No. 20016 - 260000001 and up.**

## Parts Catalog

**Ordering Replacement Parts**

To order replacement parts, please supply the part number, the quantity, and the description of each part desired.

**Understanding Reference Numbers**

Each Identified part in an illustration has a reference number. The reference number for a part also appears in the parts list, along with other information about the part.

This catalog uses two special reference number formats, one to indicate parts in a service assembly and another to indicate the quantity of a given part in an illustration.

**Service Assembly Reference Numbers**

Parts in service assemblies have reference numbers in the form a:b. The a represents the reference number of the entire service assembly and the b represents a sequential number unique to each part within the service assembly.

For example, a wheel assembly might be identified by reference number 6, the tire by 6:1, the valve by 6:2, and the wheel by 6:3. When you order the assembly identified by reference number 6, you receive all parts identified by reference numbers 6:1, 6:2, and 6:3. However, you may also order any part individually. Reference numbers of this type appear in illustrations and in part lists.

**Reference Numbers Indicating Quantity**

In an illustration, if a reference number indicates more than one part, the reference number has the form nX y. The n represents the quantity of the part, the X is the multiplication symbol, and the y represents the reference number.

For example, in an illustration, the reference number 2X 37 means that two of the parts identified by reference number 37 are indicated.

© The Toro Company - 2005
All Rights Reserved

Register your product at www.Toro.com

# Contents


| Description | Page |
|---|---|
| Deck, Side Chute and Rear Door Assembly | 3 |
| Rear Axle Assembly | 4 |
| Front Axle and Transmission Assembly | 5 |
| Transmission Assembly No. 106-3955 | 6 |
| Engine and Blade Assembly | 7 |
| Bail and Handle Assembly | 8 |
| Rear Bag Assembly | 9 |
| Engine Assembly Tecumseh Lv195ea-362003b | 10 |
| Engine Assembly Tecumseh Lv195ea-362003b (continued) | 12 |
| Carburetor Assembly No. 640303 Tecumseh Lv195ea-362003b | 14 |
| Recoil Starter Assembly No. 590739 Tecumseh No. Lv195ea-362003b | 15 |
| Recoil Starter Assembly No. 590702 (Optional) Tecumseh Lv195ea-362003b | 16 |


# Part Description Abbreviations

Part descriptions in this catalog may include the following abbreviations.

| | |
|---|---|
| AR | as required |
| ASM | assembly |
| BBC | blade brake clutch |
| CARR | carriage |
| DEG | degrees |
| EXT | external |
| FH | flat head |
| GA | gauge |
| HF | hex flange |
| HH | hex head |
| HHF | hex head flange |
| HHFTF | hex head flange thread forming |
| HJ | hex jam |
| HLH | hex lag head |
| HOC | height-of-cut |
| HSBH | hex socket button head |
| HSFH | hex socket flat head |
| HSH | hex socket head |
| HWH | hex washer head |
| HWHTF | hex washer head thread forming |
| HYD | hydraulic |
| INC | incorporated |
| LH | left hand |
| NI | nylon insert |
| NPTF | national pipe thread fine |
| PFH | phillips flat head |
| PPH | phillips pan head |
| PPHTF | phillips pan head thread forming |
| PRH | phillips round head |
| PTH | phillips truss head |
| PTO | power-take-off |
| RH | right hand |
| ROPS | roll-over-protection-system |
| SFH | slotted fillister head |
| SHH | slotted hex head |
| SHWH | slotted hex washer head |
| SPH | slotted pan head |
| SQH | square head |
| SRH | slotted round head |
| STD | standard |
| TAP | self tapping |
| TTH | torx truss head |

# Footnotes

❶ Not illustrated

❷ Not serviced separately

❸ Included in Repair Kit No. 632809

❹ Obtain from your local Tecumseh dealer

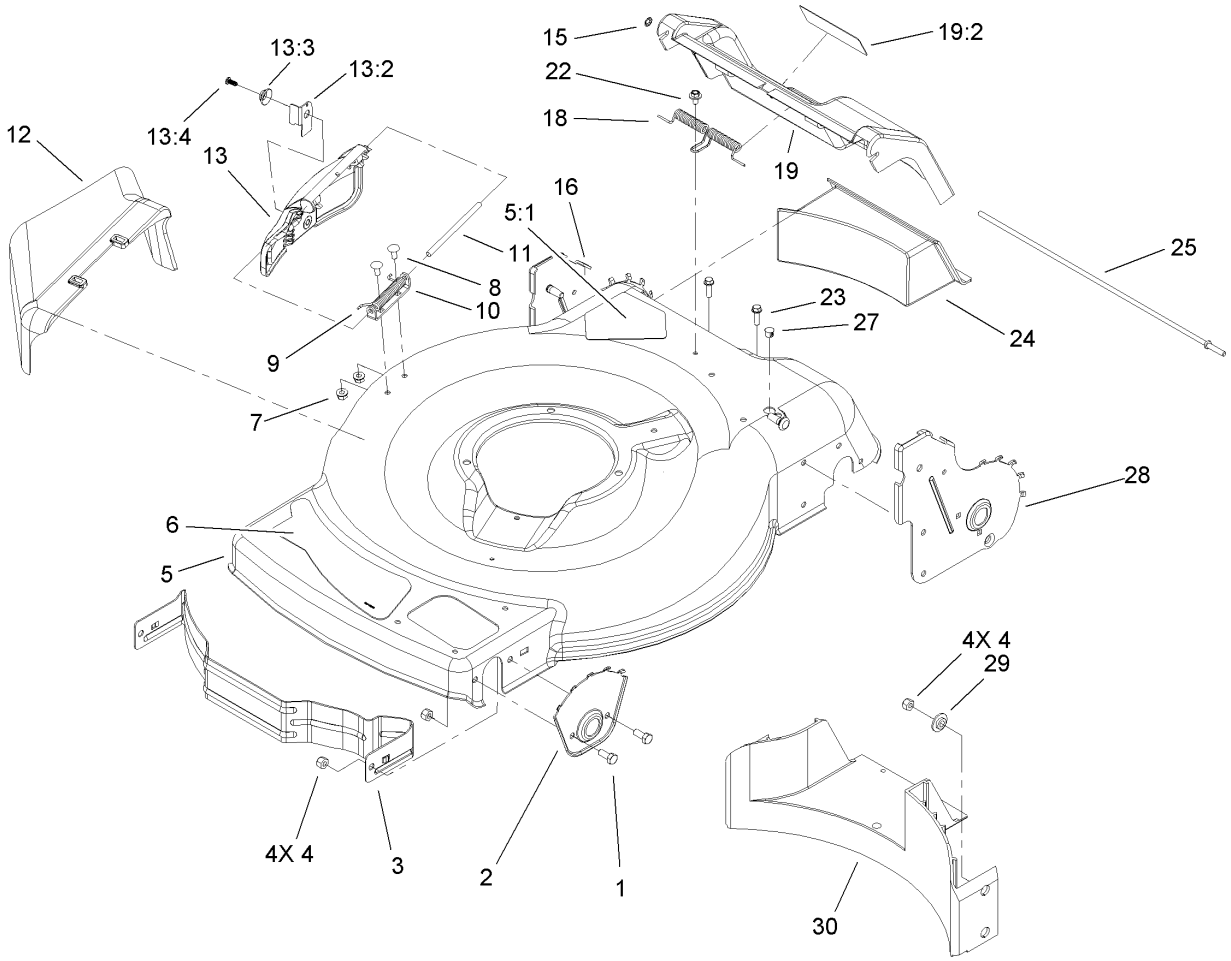


# Deck, Side Chute and Rear Door Assembly

| Ref | Part No. | Qty. | Description |
|---|---|---|---|
| 1 | 322-3 | 4 | Screw-HH |
| 2 | 105-1808-03 | 2 | Plate-HOC, Front |
| 3 | 104-8694-03 | 1 | Baffle-Front |
| 4 | 3296-29 | 8 | Nut-Lock, NI |
| 5 | 104-7915 | 1 | Housing |
| 5:1 | 105-6838 | 1 | Decal-Danger |
| 6 | 105-1296 | 1 | Decal-Deck |
| 7 | 32128-32 | 2 | Nut-HHF |
| 8 | 3229-11 | 2 | Screw-CARR |
| 9 | 99-5293 | 1 | Spring-Torsion |
| 10 | 99-5292 | 1 | Bracket-Cover |
| 11 | 99-5291 | 1 | Rod-Cover |
| 12 | 105-3028 | 1 | Chute-Discharge, Side |
| 13 | 106-8376 | 1 | Discharge Door ASM |
| 13:2 | 107-0795 | 1 | Latch-Door |
| 13:3 | 107-7456 | 1 | Cap-Door |
| 13:4 | 107-7461 | 1 | Screw-Plastite |
| 15 | 32112-6 | 1 | Nut-Push |
| 16 | 110-1635 | 1 | 11 Inch RH HOC Plate ASM |
| 18 | 105-3032 | 1 | Spring-Door, Rear |
| 19 | 105-1323 | 1 | Rear Door ASM |
| 19:2 | 105-1295 | 1 | Decal-Warning |
| 22 | 46-6810 | 1 | Screw And Washer ASM |
| 23 | 46-8091 | 2 | Screw-HWH |

| Ref | Part No. | Qty. | Description |
|---|---|---|---|
| 24 | 105-1842 | 1 | Plug-Discharge, Rear |
| 25 | 105-1827 | 1 | Rod-Pivot, Rear Door |
| 27 | 104-9369 | 1 | Plug-Dome |
| 28 | 110-1634 | 1 | 11 Inch LH HOC Plate ASM |
| 29 | 105-3006 | 4 | Washer-Stepped |
| 30 | 105-3047 | 1 | Baffle-Rear |

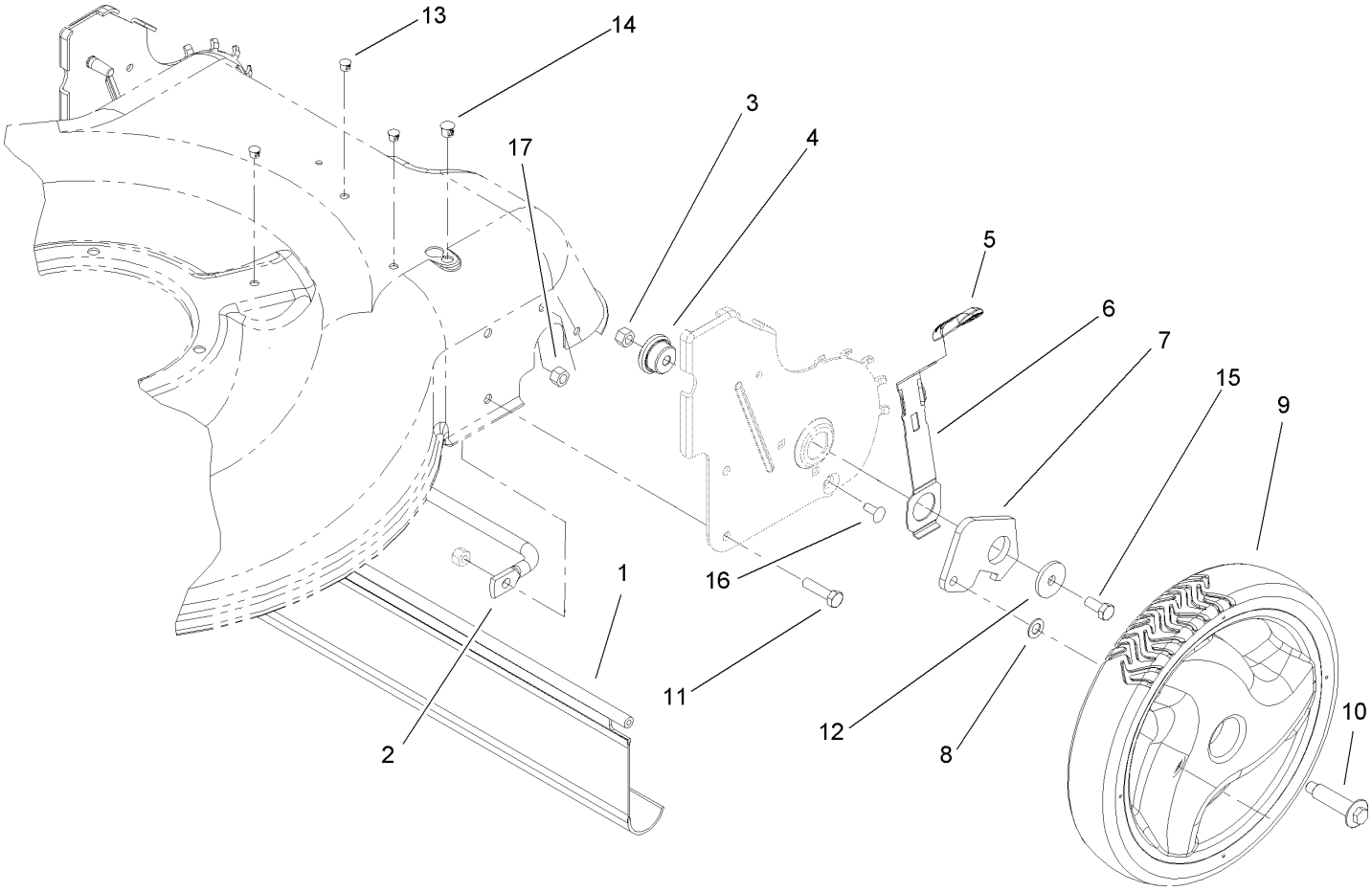


# Rear Axle Assembly

| Ref | Part No. | Qty. | Description |
|---|---|---|---|
| 1 | 105-1843 | 1 | Shield-Trailing |
| 2 | 105-1811 | 1 | Brace-Plate, HOC |
| 3 | 32153-3 | 2 | Nut-Hex, Side Deform |
| 4 | 110-1612 | 2 | Bushing-Mount |
| 5 | 105-3042 | 2 | Knob-Lever, HOC |
| 6 | 110-1630 | 2 | Arm-11 Inch Spring, Rear |
| 7 | 105-1819 | 2 | Arm-Pivot, Rear |
| 8 | 110-7466 | 2 | Washer-Wheel Bolt |
| 9 | 110-1631 | 2 | 11 Inch Wheel ASM |
| 10 | 614650 | 2 | Bolt-Shoulder |
| 11 | 322-6 | 4 | Screw-HH |
| 12 | 105-3048 | 2 | Washer-Flat |
| 13 | 104-9373 | 3 | Plug-Dome |
| 14 | 104-9368 | 1 | Plug-Dome |
| 15 | 322-3 | 2 | Screw-HH |
| 16 | 3229-11 | 4 | Screw-CARR |
| 17 | 3296-16 | 4 | Nut-Lock, NI |

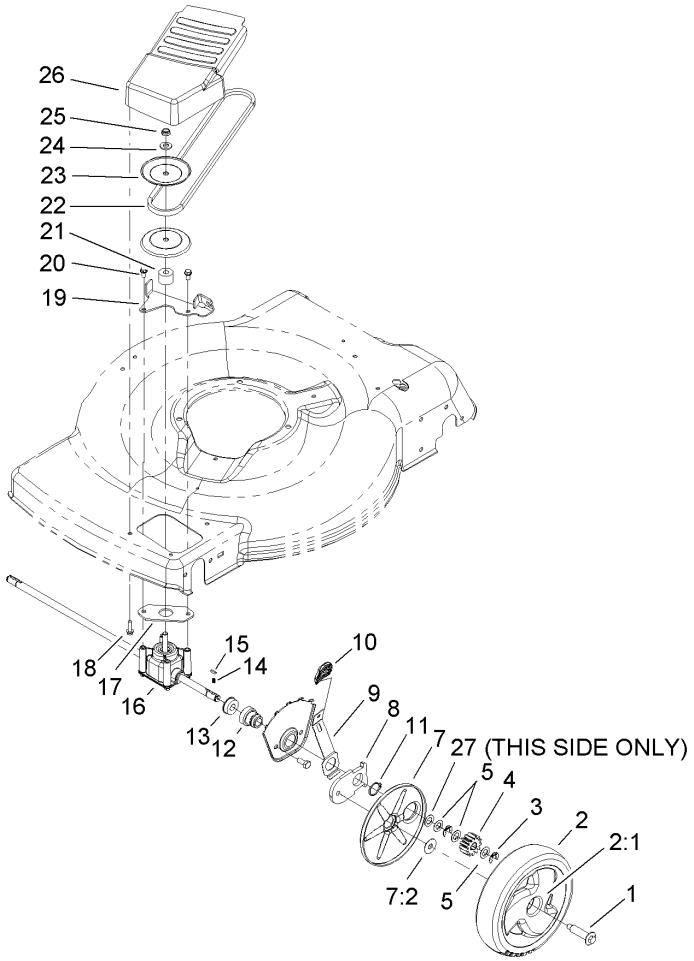


# Front Axle and Transmission Assembly

| Ref | Part No. | Qty. | Description |
|---|---|---|---|
| 1 | 614650 | 2 | Bolt-Shoulder |
| 2 | 105-1815 | 2 | Wheel Gear ASM |
| 2:1 | 27-6250 | 2 | Bushing |
| 3 | 65-2720 | 4 | Klipring-Locking |
| 4 | 104-8670 | 2 | Gear-Pinion, 13T |
| 5 | 105-6840 | 6 | Washer-Thrust |
| 7 | 108-3794 | 2 | Cover-Wheel |
| ❶❷7:1 | | 1 | Cover |
| 7:2 | 614426 | 1 | Washer-Stepped |
| 8 | 105-1807 | 2 | Arm-Pivot, Front |
| 9 | 105-1809 | 2 | Arm-Spring |
| 10 | 105-3042 | 2 | Knob-Lever, HOC |
| 11 | 32151-36 | 2 | Ring-Retaining |
| 12 | 104-8698 | 2 | Retainer-Bearing, HOC |
| 13 | 104-8699 | 2 | Bearing-Ball |
| 14 | 39-9650 | 2 | Spring-Compression |
| 15 | 612066 | 2 | Key |
| 16 | 106-3955 | 1 | Transmission ASM |
| 17 | 108-9756 | 1 | Gasket-Gearbox |
| 18 | 46-8091 | 2 | Screw-HWH |
| 19 | 105-1833-03 | 1 | Bracket-Pivot, Fwd |
| 20 | 32144-4 | 2 | Screw-HWH |
| 21 | 92-5791 | 1 | Spacer |
| 22 | 91-2258 | 1 | V-Belt |

| Ref | Part No. | Qty. | Description |
|---|---|---|---|
| 23 | 104-8691 | 2 | Pulley-Half, Front |
| 24 | 3256-24 | 1 | Washer-Flat |
| 25 | 3296-5 | 1 | Nut-Lock |
| 26 | 105-1839 | 1 | Cover-Belt, Front |
| 27 | 36-4780 | 1 | Washer |

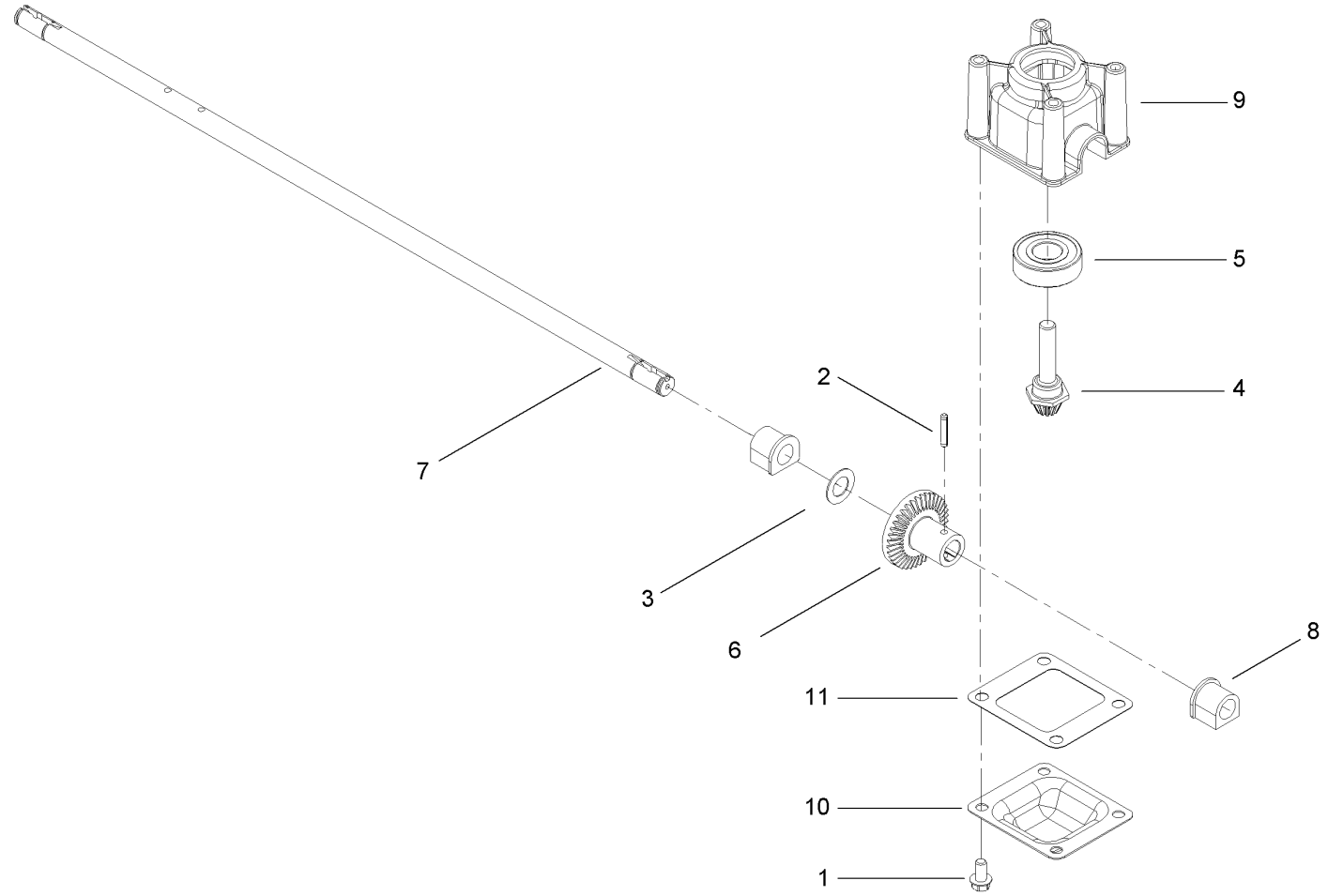


# Transmission Assembly No. 106-3955

| Ref | Part No. | Qty. | Description |
|---|---|---|---|
| 1 | 32144-4 | 4 | Screw-HWH |
| 2 | 3285-19 | 1 | Pin-Groove |
| 3 | 36-4780 | 1 | Washer |
| 4 | 92-5790 | 1 | Pinion |
| 5 | 100-1048 | 1 | Bearing-Ball |
| 6 | 104-8671 | 1 | Gear-Bevel, 37T |
| 7 | 106-3957 | 1 | Shaft-Output |
| 8 | 104-8673 | 2 | Bushing-Shaft, Output |
| 9 | 104-8674 | 1 | Gearcase-Upper |
| 10 | 104-8675-03 | 1 | Cover-Gearcase |
| 11 | 105-6839 | 1 | Gasket-Gearcase |

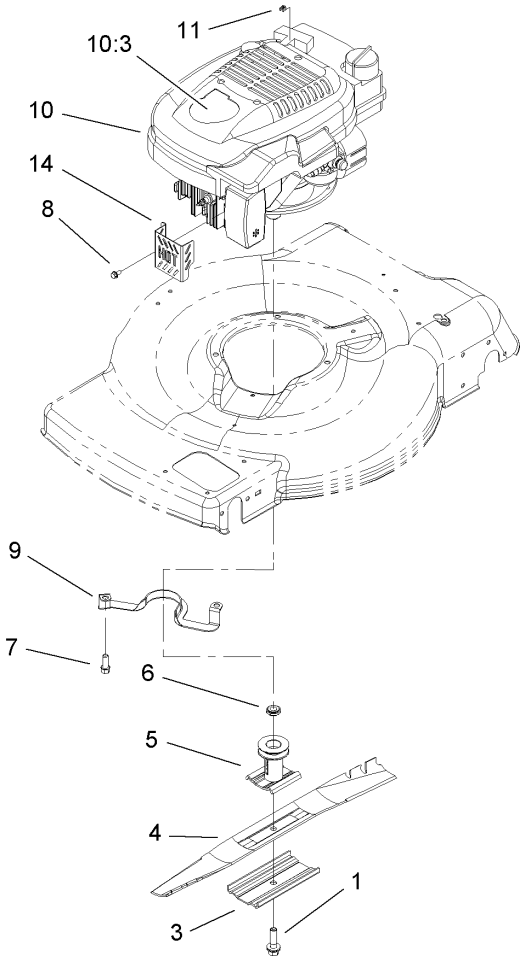


# Engine and Blade Assembly

| Ref | Part No. | Qty. | Description |
|---|---|---|---|
| 1 | 105-8579 | 1 | Bolt-Blade |
| 3 | 108-3766-03 | 1 | Support-Blade |
| 4 | 104-8697-03 | 1 | Blade-22 Inch |
| 5 | 106-3987 | 1 | Blade Driver ASM |
| 6 | 106-3999 | 1 | Spacer-Driver |
| 7 | 95-1726 | 3 | Screw-Taptite |
| 8 | 32144-85 | 1 | Screw-HWH |
| 9 | 105-3031-03 | 1 | Guide-Belt |
| ❷❹10 | | 1 | Engine-Tecumseh, Lev195Ea-362003B |
| 10:3 | 105-6815 | 1 | Decal-Recoil |
| 11 | 92-1701 | 1 | Stop-Rope |
| 14 | 106-8346-03 | 1 | Guard-Muffler |

| | | | |
|---|---|---|---|

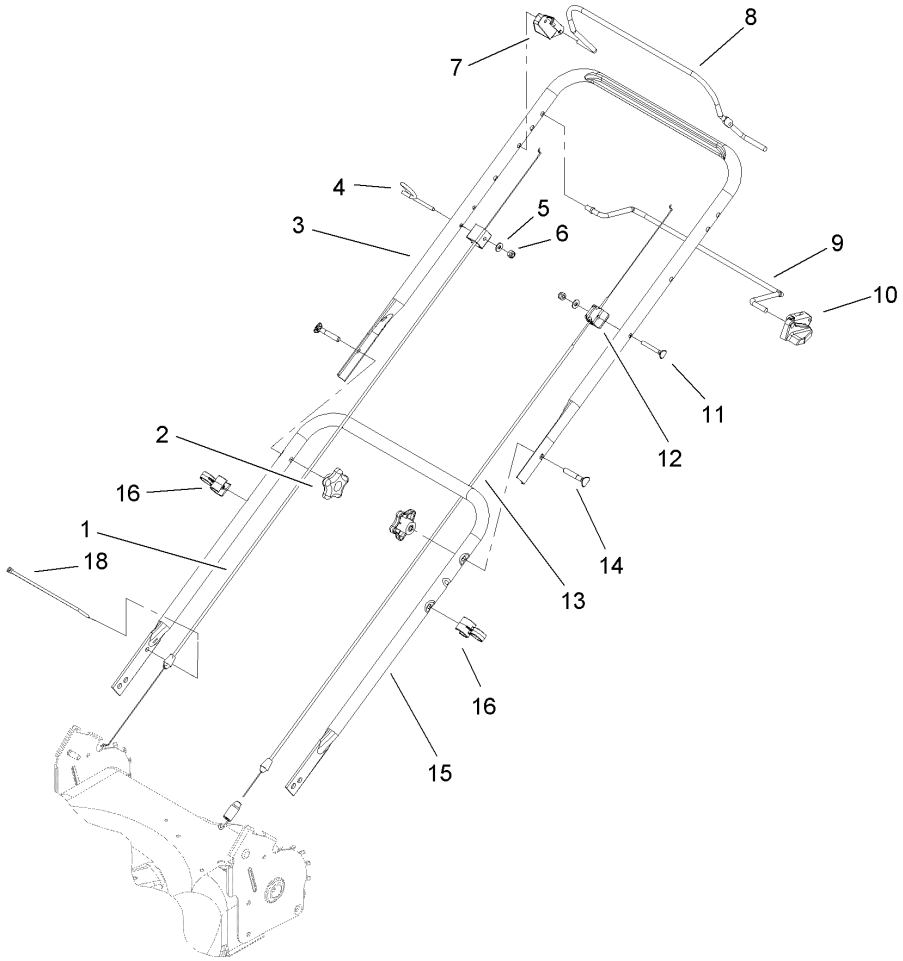


# Bail and Handle Assembly

| Ref | Part No. | Qty. | Description |
|---|---|---|---|
| 1 | 104-8677 | 1 | Cable-Brake |
| 2 | 106-4161 | 2 | Knob-Handle |
| 3 | 104-8680-05 | 1 | Handle-Upper |
| 4 | 106-8330 | 1 | Guide-Rope |
| 5 | 3256-1 | 2 | Washer-Flat |
| 6 | 3296-73 | 2 | Nut-Lock, NI |
| 7 | 107-0757 | 1 | Stop-Pivot |
| 8 | 105-6800-03 | 1 | Bail-Brake |
| 9 | 105-1837-03 | 1 | Bail-Control |
| 10 | 104-8682 | 1 | Stop-Pivot |
| 11 | 95-4453 | 1 | Screw |
| 12 | 92-7729 | 1 | Anchor-Cable, Upper |
| 13 | 105-1845 | 1 | Cable-Traction |
| 14 | 92-2260 | 2 | Screw-Handle |
| 15 | 107-0784-05 | 1 | Handle-Lower |
| 16 | 106-6805 | 2 | Guide-Cable |
| 18 | 614249 | 1 | Strap-Tie |

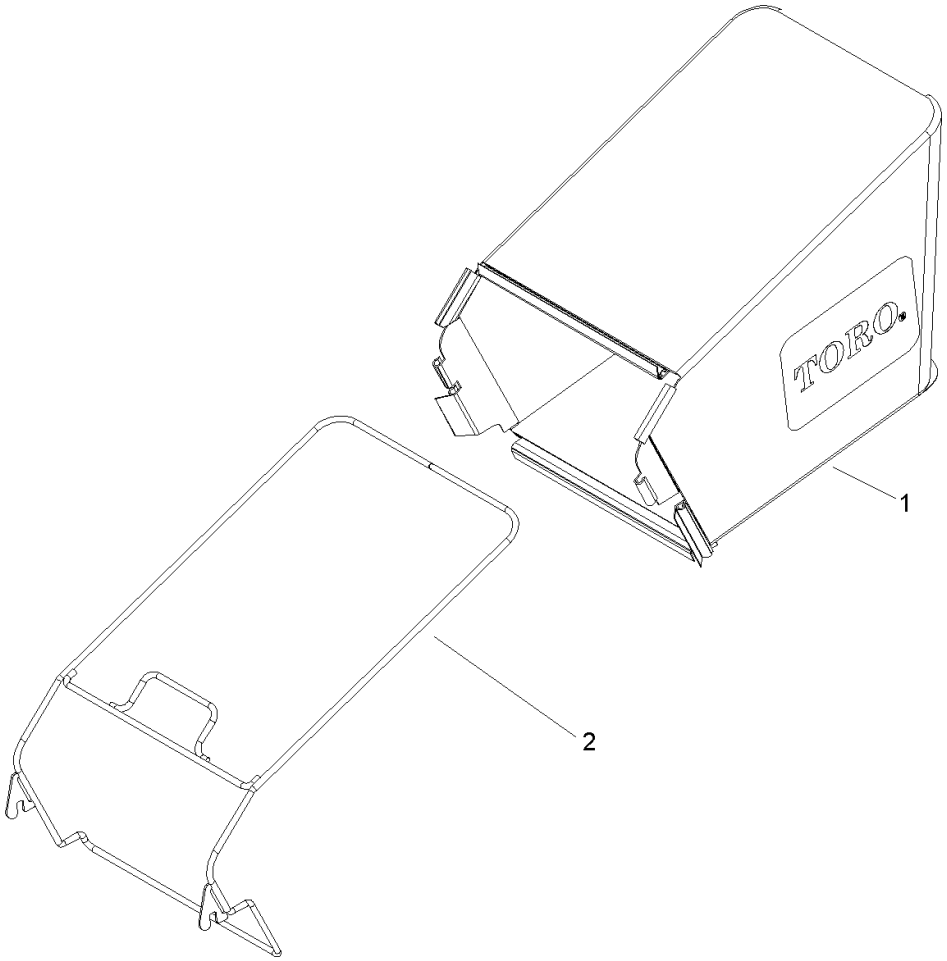


# Rear Bag Assembly

| Ref | Part No. | Qty. | Description |
|---|---|---|---|
| 1 | 107-3779 | 1 | Grass Bag ASM |
| 2 | 107-3785-03 | 1 | Bag Frame ASM |

# Engine Assembly
# Tecumseh Lv195ea-362003b

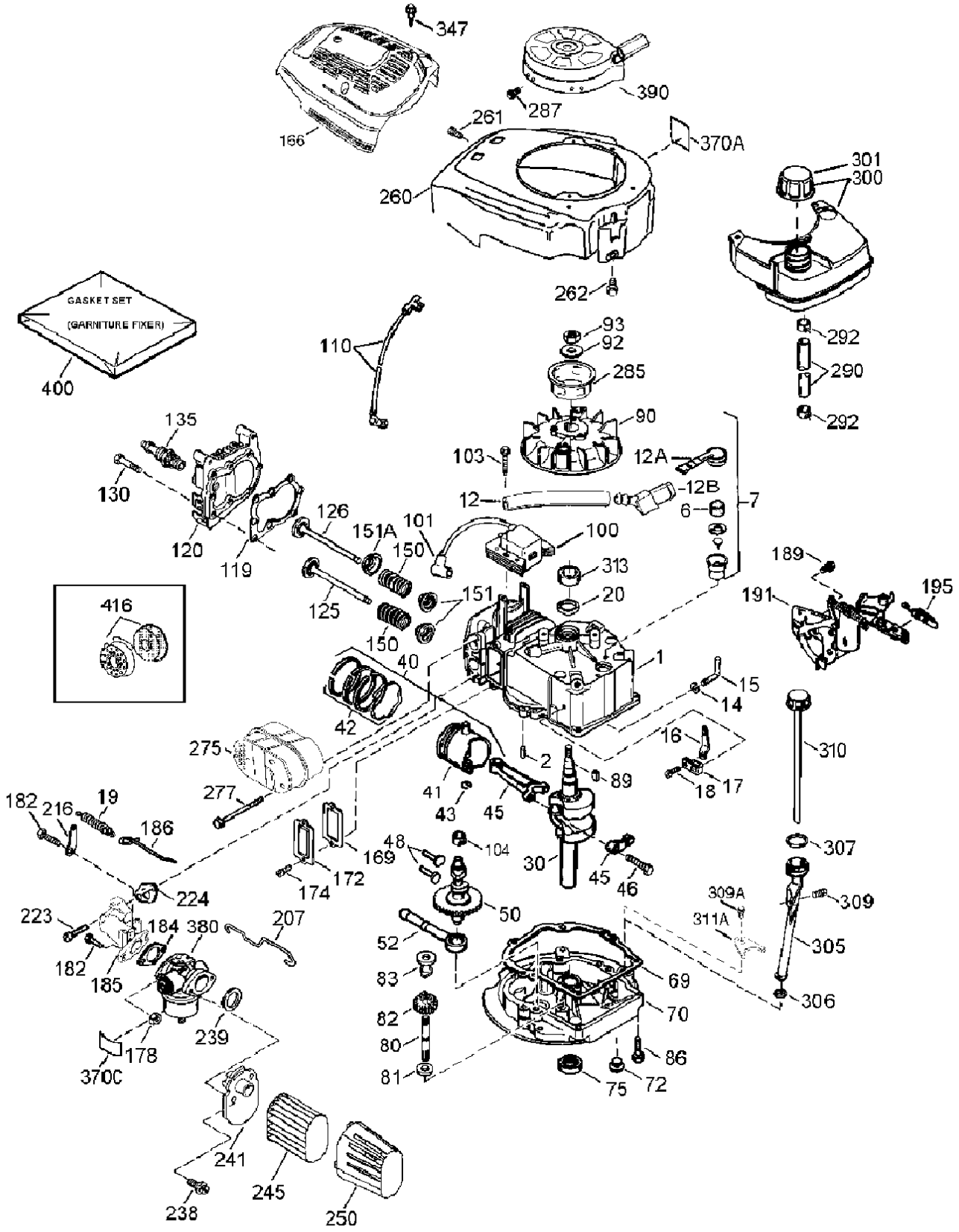

# Engine Assembly
# Tecumseh Lv195ea-362003b

| Ref | Part No. | Qty. | Description |
|---|---|---|---|
| ❹1 | 37465 | 1 | Cylinder |
| ❹2 | 26727 | 2 | Pin-Dowel |
| ❹6 | 33734 | 1 | Element-Breather |
| ❹7 | 36557 | 1 | Breather ASM (Incl. Ref. #6 And 12A) |
| ❹12 | 36775 | 1 | Tube-Breather |
| ❹12A | 36558 | 1 | Breather Cover And Tube (Incl. Ref. #12B) |
| ❹12B | 36694 | 1 | Elbow-Tube, Breather |
| ❹14 | 28277 | 1 | Washer |
| ❹15 | 30589 | 1 | Governor Rod (Incl. Ref. #14) |
| ❹16 | 34839A | 1 | Lever-Governor |
| ❹17 | 31335 | 1 | Clamp-Lever, Governor |
| ❹18 | 651018 | 1 | Screw |
| ❹19 | 36281 | 1 | Spring-Extension |
| ❹20 | 32600 | 1 | Seal-Oil |
| ❹30 | 37692 | 1 | Crankshaft |
| ❹40 | 40027 | 1 | Piston Pin And Ring Set (STD) |
| ❹41 | 40042 | 1 | Piston And Pin ASM (STD.) (Incl. Ref. # 43) |
| ❹42 | 40006 | 1 | Ring Set (STD) |
| ❹43 | 20381 | 2 | Ring-Retaining |
| ❹45 | 36777 | 1 | Connecting Rod ASM (Incl. Ref. #46) |
| ❹46 | 32610A | 2 | Bolt-Rod, Connecting |
| ❹48 | 27241 | 2 | Lifter-Valve |
| ❹50 | 37460 | 1 | Camshaft (Exhaust Mcr) (Incl. Ref. #104) |
| ❹52 | 29914 | 1 | Oil Pump ASM |
| ❹*69 | 37609 | 1 | Gasket-Flange, Mounting |
| ❹70 | 37608 | 1 | Flange-Mounting (Incl. Ref. #72-83,306,309A & 311A) |
| ❹72 | 37614 | 1 | Plug-Drain, Oil |
| ❹75 | 27897 | 1 | Seal-Oil |
| ❹80 | 30574A | 1 | Shaft-Governor |
| ❹81 | 30590A | 1 | Washer |
| ❹82 | 30591 | 1 | Governor Gear ASM (Incl. Ref. #81) |
| ❹83 | 30588A | 1 | Spool-Governor |
| ❹86 | 650488 | 6 | Screw (1/4–20 X 1–1/4In) |
| ❹89 | 611004 | 1 | Key-Flywheel |
| ❹90 | 611112 | 1 | Flywheel |
| ❹92 | 650815 | 1 | Washer-Belleville |
| ❹93 | 650816 | 1 | Nut-Flywheel |
| ❹100 | 34443C | 1 | Ignition-Solid State |
| ❹101 | 610118 | 1 | Cover-Plug, Spark |
| ❹103 | 651007 | 2 | Screw |
| ❹104 | 37480 | 1 | Bushing-Cam |
| ❹110 | 37047 | 1 | Wire-Ground |
| ❹*119 | 36787 | 1 | Gasket-Cylinder Head |
| ❹120 | 36825 | 1 | Head-Cylinder |
| ❹125 | 36780 | 1 | Valve-Exhaust (1/32In Os) (Incl. 151) |

| Ref | Part No. | Qty. | Description |
|---|---|---|---|
| ❹125 | 37288 | 1 | Valve-Exhaust (STD.) (Incl. Ref. #151) |
| ❹126 | 37289 | 1 | Valve-Intake (STD.) (Incl. Ref. #151 And 151A) |
| ❹130 | 6021A | 8 | Screw (5/16–18 X 1–7/16In) |
| ❹135 | 35395 | 1 | Spark Plug-Resistor (Rj19Lm) |
| ❹150 | 31672 | 2 | Spring-Valve |
| ❹151 | 31673 | 2 | Cap-Spring, Valve |
| ❹151A | 40017 | 1 | Seal-Valve, Intake |
| ❹166 | 37694 | 1 | Shroud-Engine |
| ❹*169 | 36783 | 1 | Gasket-Cover, Valve |
| ❹172 | 36784 | 1 | Cover-Valve |
| ❹174 | 30200 | 2 | Screw (10–24 X 9/16In) |
| ❹178 | 29752 | 2 | Nut And Lock Washer ASM |
| ❹182 | 6201 | 2 | Screw (1/4–28 X 7/8In) |
| ❹*184 | 26756 | 1 | Gasket-Carburetor To Intake Pipe |
| ❹185 | 37466 | 1 | Pipe-Intake |
| ❹186 | 32653 | 1 | Link-Governor |
| ❹189 | 650839 | 2 | Screw (1/4–20 X 3/8In) |
| ❹191 | 36559A | 1 | Bracket-S.E. Brake (Incl. Ref. #195) |
| ❹195 | 610973 | 1 | Terminal |
| ❹207 | 34336A | 1 | Link-Throttle |
| ❹216 | 33086 | 1 | Lever-Adjusting, R.P.M. |
| ❹223 | 650451 | 2 | Screw (1/4–20 X 1In) |
| ❹*224 | 36786 | 1 | Gasket-Pipe, Intake |
| ❹238 | 650932 | 2 | Screw (10–32 X 49/64In) |
| ❹*239 | 34338 | 1 | Gasket-Cleaner, Air |
| ❹241 | 36919 | 1 | Collar-Cleaner, Air |
| ❹245 | 36905 | 1 | Filter-Cleaner, Air |
| ❹250 | 37122 | 1 | Cover-Cleaner, Air |
| ❹260 | 37696A | 1 | Housing-Blower |
| ❹261 | 30200 | 2 | Screw (10–24 X 9/16In) |
| ❹262 | 650831 | 2 | Screw (1/4–20 X 1/2In) |
| ❹275 | 37498 | 1 | Muffler |
| ❹277 | 650988 | 2 | Screw (1/4–20 X 2–9/32In) |
| ❹285 | 35000A | 1 | Cup-Starter |
| ❹287 | 650926 | 2 | Screw (8–32 X 21/64In) |
| ❹290 | 29774 | 1 | Line-Fuel |
| ❹292 | 26460 | 2 | Clamp-Line, Fuel |
| ❹300 | 35586A | 1 | Fuel Tank (Incl. Ref. #292 And 301) |
| ❹301 | 36246 | 1 | Cap-Fuel |
| ❹305 | 35647 | 1 | Tube-Fill, Oil |
| ❹*306 | 37610 | 1 | O–Ring |
| ❹307 | 35499 | 1 | O–Ring |
| ❹309 | 650562 | 1 | Screw (10–32 X 1/2In) |
| ❹309A | 650783 | 1 | Screw (10–24 X 3/4In) |
| ❹310 | 35648 | 1 | Dipstick |
| ❹311A | 37611 | 1 | Bracket-Down, Hold |
| ❹313 | 34080 | 1 | Spacer |
| ❹347 | 650898A | 1 | Screw (10–32 X 27/32In) |

# Engine Assembly
# Tecumseh Lv195ea-362003b (continued)

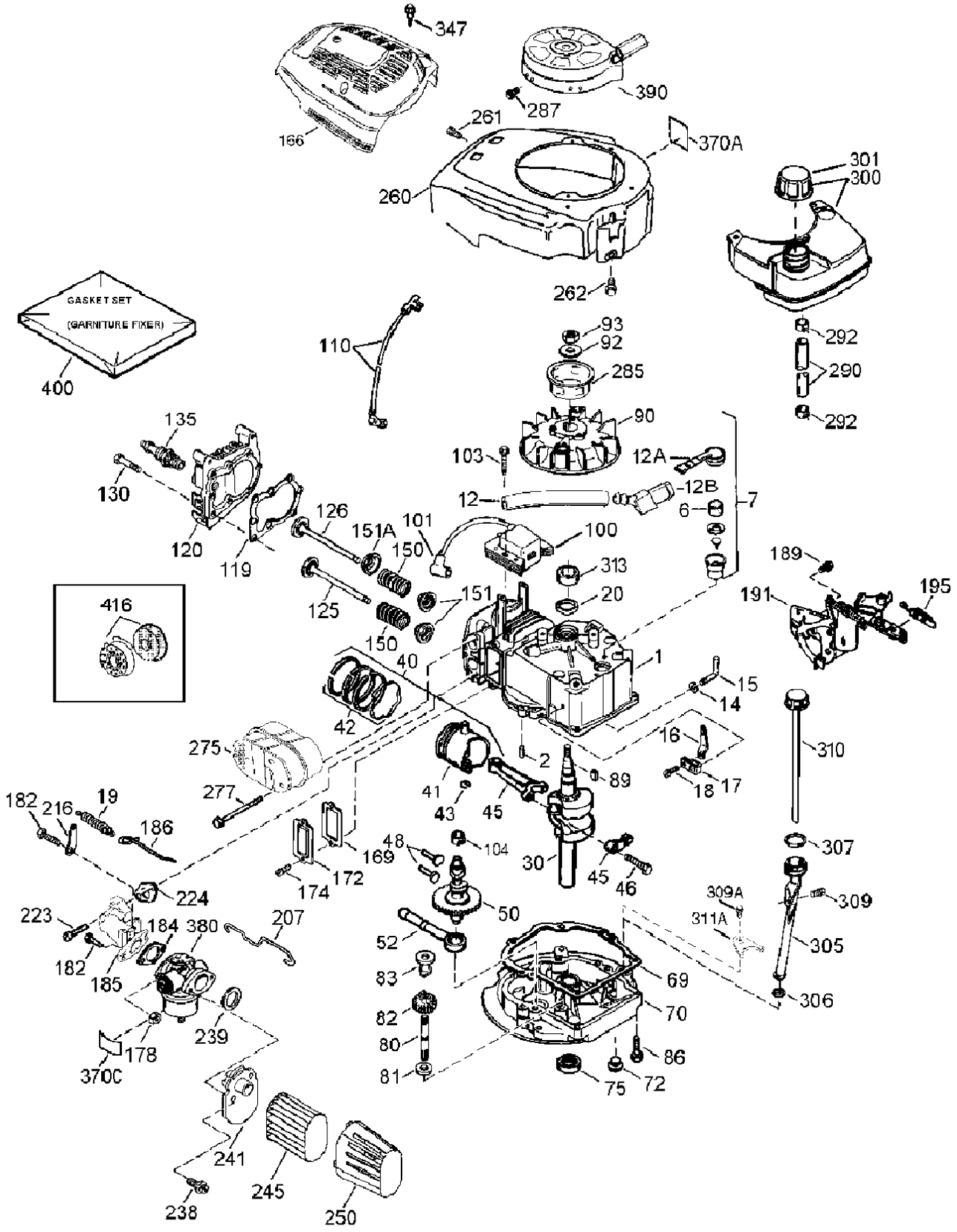

# Engine Assembly
# Tecumseh Lv195ea-362003b (continued)

| Ref | Part No. | Qty. | Description |
|---|---|---|---|
| ❹370 | 35977 | 1 | Decal-Warning |
| ❹370A | 36261 | 2 | Decal-Lubrication |
| ❹370C | 37695 | 1 | Decal-Primer |
| ❹380 | 640303 | 1 | Carburetor (Incl. Ref. #184) |
| ❹390 | 590739 | 1 | Starter-Rewind |
| ❹400 | 37613 | 1 | Gasket Set |
| ❹416 | 37530 | 1 | Spark Arrestor Kit (Optional) |
| ❹ | 750876 | 1 | Shortblock |

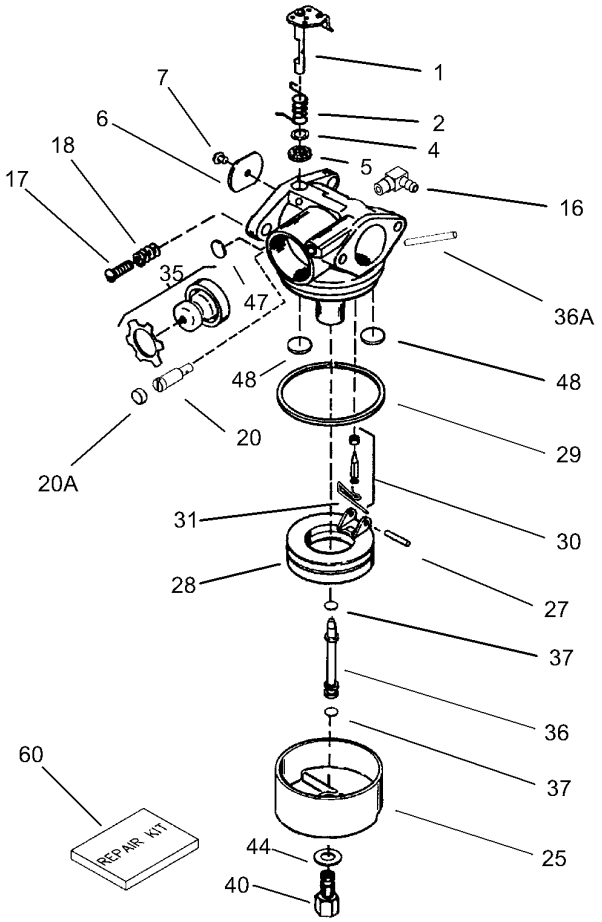


# Carburetor Assembly No. 640303
# Tecumseh Lv195ea-362003b

| Ref | Part No. | Qty. | Description |
|---|---|---|---|
| ❹0 | 640303 | 1 | Carburetor (Incl. Ref. #184 Of Engine Parts List) |
| ❹1 | 631615 | 1 | Throttle Shaft And Lever ASM |
| ❹2 | 631767 | 1 | Spring-Return, Throttle |
| ❸❹4 | 631184 | 1 | Washer-Seal, Dust |
| ❸❹5 | 631183 | 1 | Seal-Dust, Throttle |
| ❹6 | 640070 | 1 | Shutter-Throttle |
| ❸❹7 | 650506 | 1 | Screw-Shutter |
| ❹16 | 631807 | 1 | Fitting-Fuel |
| ❹17 | 651025 | 1 | Screw-Throttle Crack And Idle Speed |
| ❹18 | 630766 | 1 | Spring-Tension |
| ❹20 | 640018 | 1 | Screw-Idle Restrictor |
| ❸❹20A | 640200 | 1 | Cap-Screw, Idle Restrictor |
| ❹25 | 631867 | 1 | Bowl-Float |
| ❸❹27 | 631024 | 1 | Shaft-Float |
| ❹28 | 632802 | 1 | Float |
| ❸❹29 | 631028 | 1 | O Ring-Bowl, Float |
| ❸❹30 | 632807 | 1 | Inlet Needle, Seat, And Clip ASM (Incl. Ref. #31) |
| ❸❹31 | 631022 | 1 | Clip-Spring |
| ❹35 | 640259 | 1 | Primer Bulb/Retainer Ring |
| ❹36 | 640019 | 1 | Tube-Main Nozzle |
| ❹36A | 632766 | 1 | Tube-Carburetor |
| ❸❹37 | 632547 | 2 | O Ring-Nozzle Tube, Main |

| Ref | Part No. | Qty. | Description |
|---|---|---|---|
| ❹40 | 640087 | 1 | Nut-High Speed Bowl |
| ❸❹44 | 27110A | 1 | Washer-Nut, Bowl |
| ❸❹47 | 630748 | 1 | Plug-Welch, Idle Mixture Well |
| ❸❹48 | 631027 | 2 | Plug-Welch, Atmospheric Vent |
| ❹60 | 632809 | 1 | Repair Kit |

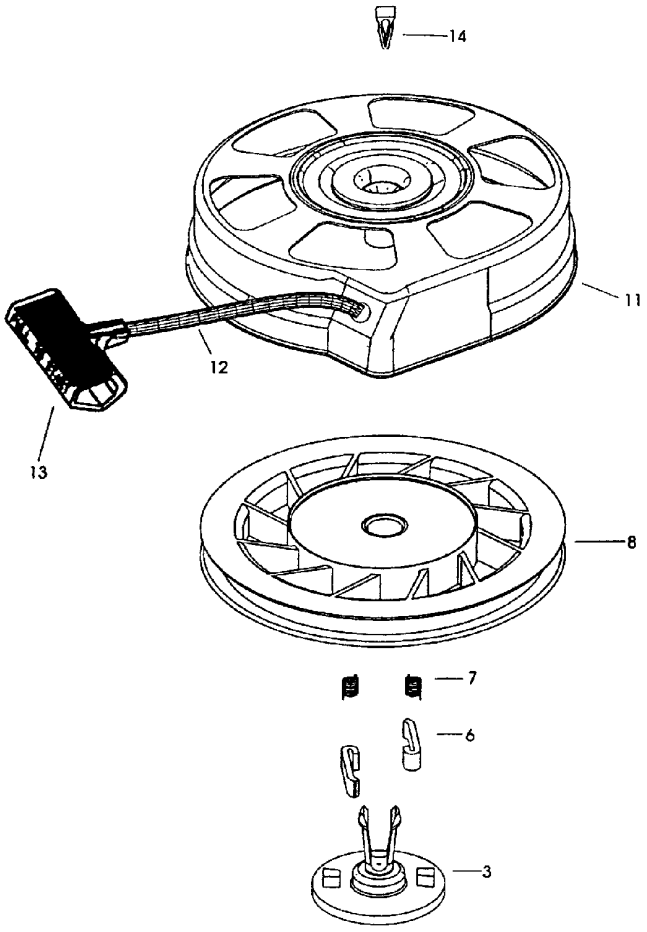


# Recoil Starter Assembly No. 590739
# Tecumseh No. Lv195ea-362003b

| Ref | Part No. | Qty. | Description |
|---|---|---|---|
| ❹0 | 590739 | 1 | Starter-Rewind |
| ❹3 | 590740 | 1 | Retainer |
| ❹6 | 590616 | 2 | Dog-Starter |
| ❹7 | 590617 | 2 | Spring-Dog |
| ❹8 | 590618A | 1 | Pulley And Rewind Spring ASM |
| ❹11 | 590638A | 1 | Starter Housing ASM |
| ❹12 | 590535 | 1 | Rope-Starter (98In X 9/64In Diameter) |
| ❹13 | 590701 | 1 | Handle-Starter |
| ❹14 | 590760 | 1 | Clip-Spring |

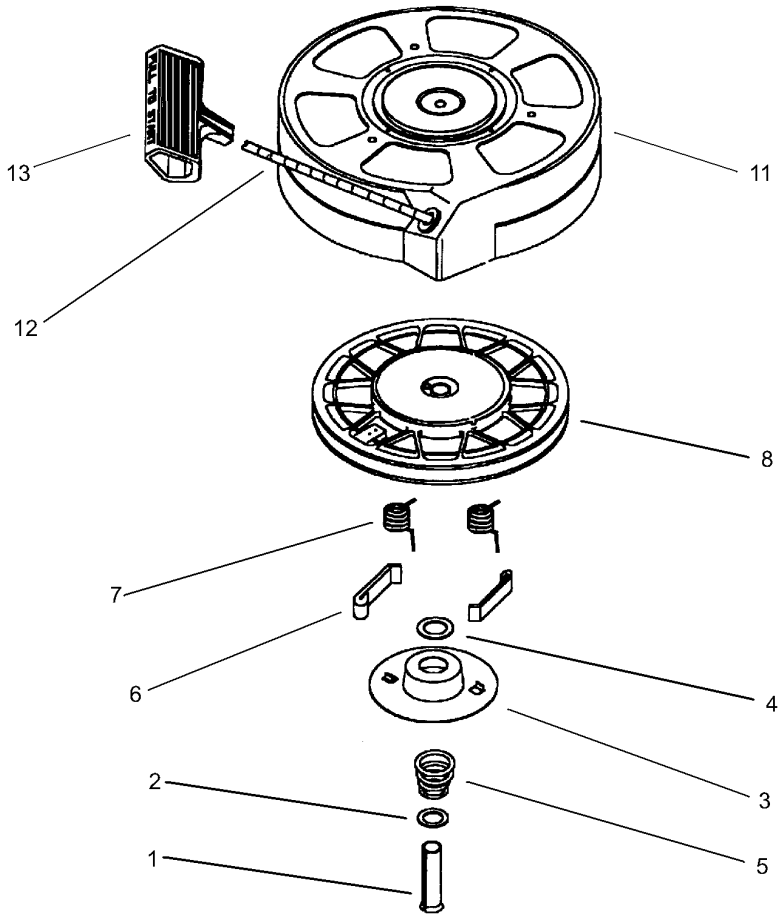


# Recoil Starter Assembly No. 590702 (Optional)
# Tecumseh Lv195ea-362003b

| Ref | Part No. | Qty. | Description |
|---|---|---|---|
| ❹0 | 590702 | 1 | Starter-Recoil |
| ❹1 | 590599A | 1 | Spring Pin ASM |
| ❹2 | 590600 | 1 | Washer |
| ❹3 | 590696 | 1 | Retainer |
| ❹4 | 590601 | 1 | Washer |
| ❹5 | 590697 | 1 | Spring-Brake |
| ❹6 | 590698 | 2 | Dog-Starter |
| ❹7 | 590699 | 2 | Spring-Dog |
| ❹8 | 590700 | 1 | Pulley And Rewind Spring ASM |
| ❹11 | 590703A | 1 | Starter Housing ASM |
| ❹12 | 590535 | 1 | Rope-Starter (98In X 9/64In Diameter) |
| ❹13 | 590701 | 1 | Handle-Starter |

# NOTES

# NOTES

# NOTES


TORO®