FORM NO. 3313-594 Rev. A

TORO®

MODEL NO. 38573-9000001 & UP

PARTS CATALOG

828 SNOWTHROWER

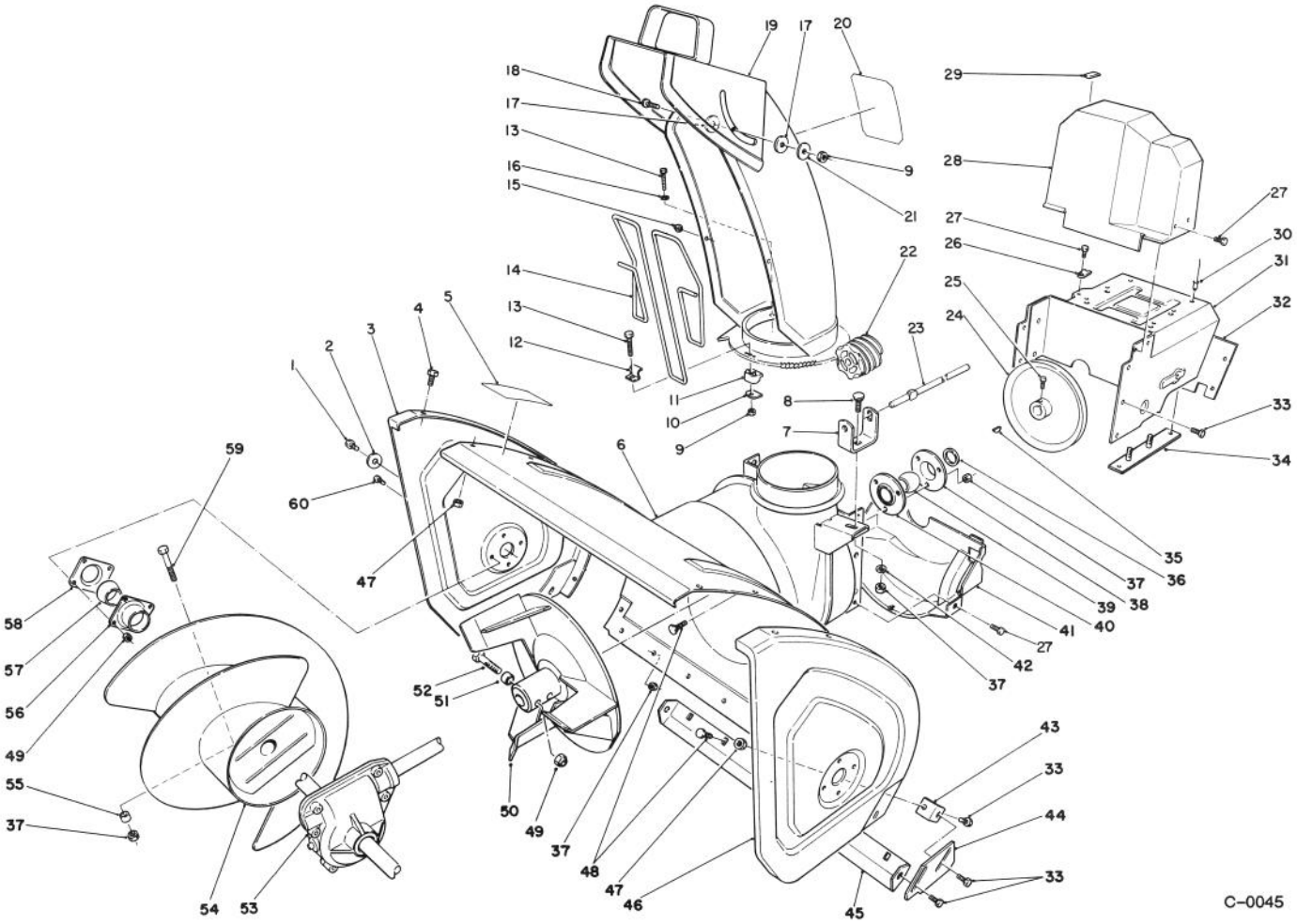

HOUSING & CHUTE ASSEMBLY

Ref. No.	Part No.	Description	No. Used
1	323-6	Screw - Cap Hex Hd.	2
2	3-0750	Washer - Retaining	2
3	66-7820	Plate - Side R.H.	1
4	3234-28	Screw - Hex Flange Hd.	10
5	53-7670	Decal - Danger Auger	1
6	62-0721	Housing - 28"	1
7	63-2180	Bracket - Gear	1
8	3230-2	Bolt - Carriage	1
9	3296-2	Nut - Lock	4
10	63-2670	Plate - Chute Retainer	3
11	62-1430	Retainer - Chute	3
12	63-3130	Bracket - Chute Guard	1
13	3274-13	Screw - Machine	3
14	63-3020	Guard - Chute	1
15	3290-326	Nut - Push	2

Ref. No.	Part No.	Description	No. Used
16	3256-14	Washer - Flat	1
17	63-2900	Washer - Plastic	2
18	32122-32	Screw	1
19	62-0840	Chute Assembly	1
20	53-7660	Decal - Danger Chute	1
21	3256-61	Washer - Flat	1
22	62-0820	Gear - Worm	1
23	62-1720	Rod - Chute Gear	1
24	62-1300	Pulley - Impeller	1
25	3242-4	Screw - Set Sq. Hd.	2
26	63-2300	Retainer - Cable	1
27	32144-4	Screw - Hex Flange Hd.	6
28	63-2080	Cover - Belt (Upper)	1
29	63-3290	Cover - Cable	1
30	3269-23	Rivet	4

©The TORO Company - 1988

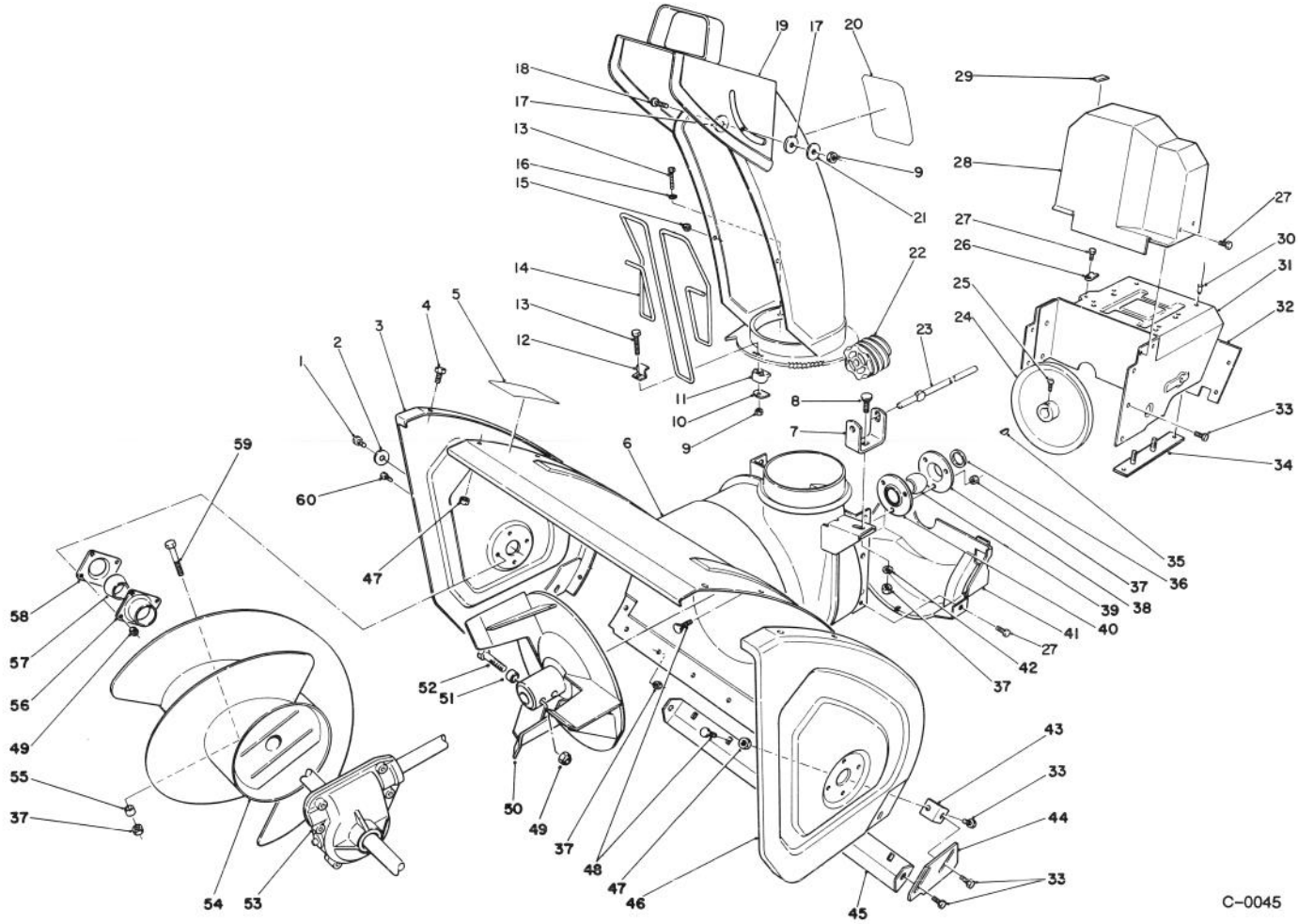

HOUSING & CHUTE ASSEMBLY (Continued)

Ref. No.	Part No.	Description	No. Used
31	66-7780	Frame - Engine	1
32	62-1440	Cover - Engine Frame	1
33	3234-7	Screw - Hex. Washer Hd.	12
34	68-4110	Plate - Engine Stud L.H.	1
*	68-4100	Plate - Engine Stud R.H.	1
35	3257-23	Key - Woodruff	1
36	252-80	Washer - Thrust	1
37	3296-29	Nut - Lock	13
38		Flange - Bearing (Rear)	1
39	63-3450	Bearing - Impeller	1
40		Flange - Bearing (Front)	1
41	62-1400	Cover - Belt (Lower)	1
42	3256-23	Washer - Flat	1
43	62-1240	Bracket - Skid	2
44	62-0980	Plate - Skid L.H.	1
*	62-0990	Plate - Skid R.H.	1
45	66-7761	Blade - Scraper	1
46	66-7830	Plate - Side L.H.	1

Ref. No.	Part No.	Description	No. Used
47	3296-47	Nut - Lock	12
48	3230-23	Screw - Carriage	10
49	3296-42	Nut - Lock	10
50	66-7920	Impeller	1
51	66-8010	Spacer	2
52	321-44	Screw - Cap Hex. Hd.	2
53	66-8021	Auger Gearbox Assembly	1
54	68-7451	Auger - R.H.	1
*	68-7461	Auger - L.H.	1
55	25-5090	Spacer - Auger Hub	2
56	20-0990	Flange - Bearing (Inner)	2
57	20-0980	Bearing - Auger	2
58	20-1000	Flange - Bearing (Outer)	2
59	17-7030	Bolt - Auger	2
60	321-3	Screw - Cap Hex Hd.	8
*	12-8789	Impeller Bearing Assembly (Incl. Ref. #38-40)	1

*Not Illustrated

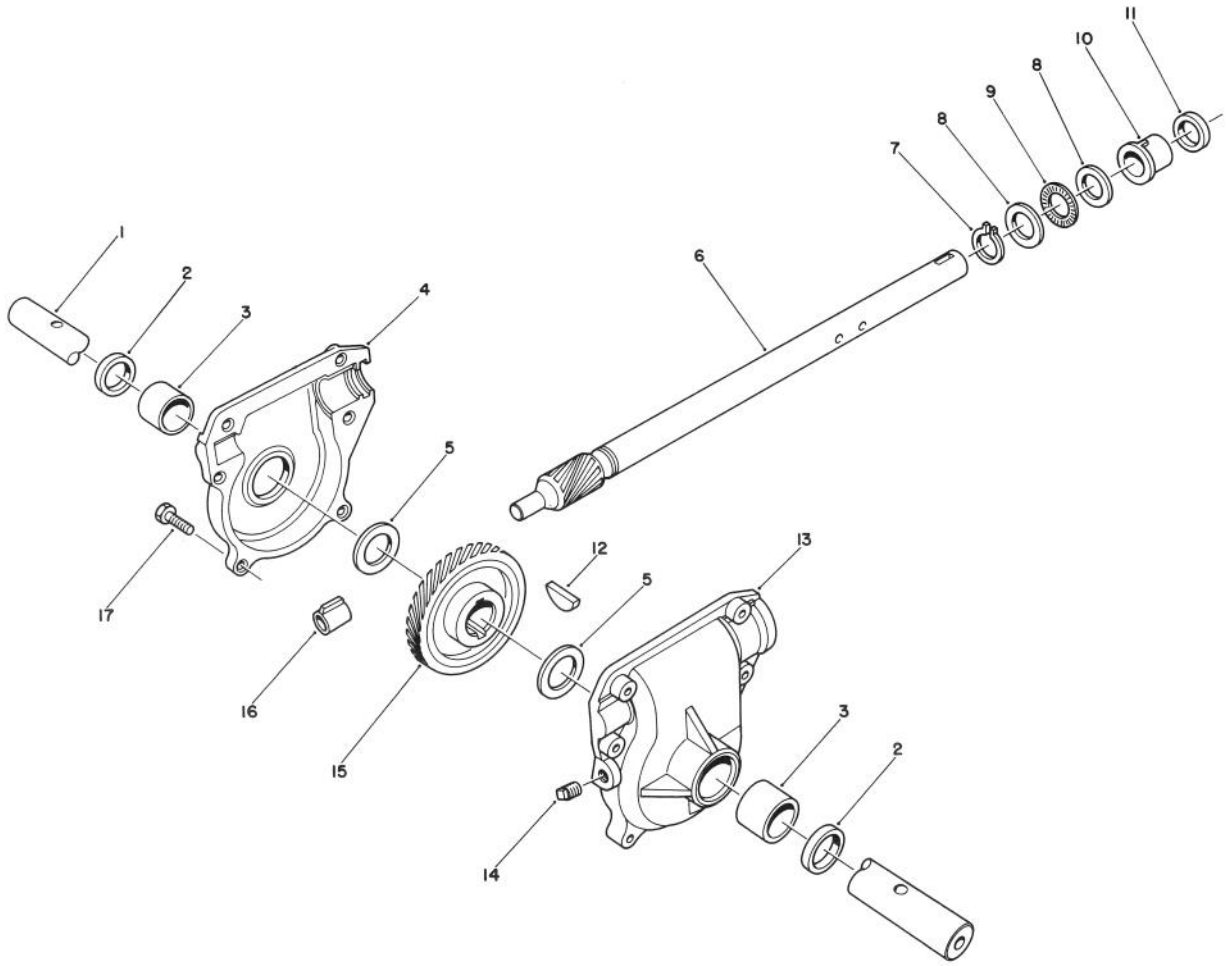

28" AUGER GEARCASE ASSEMBLY NO. 66-8021

Ref. No.	Part No.	Description	No. Used
1	62-1531	Shaft - Auger (28")	1
2	7-0045	Seal - Oil	2
3	256-237	Bushing - Sleeve	2
4	62-0570	Gearcase Assembly - R.H. (Incl. Ref. # 2-3)	2
5	252-71	Bearing - Thrust	2
6	66-7810	Shaft - Impeller	1
7	32151-33	Ring - Snap	1
8	252-78	Washer - Thrust	2
9	252-76	Bearing - Thrust	1

Ref. No.	Part No.	Description	No. Used
10	37-6560	Bushing - Input	1
11	253-149	Seal - Input	1
12	3257-10	Key - Woodruff	1
13	62-0580	Gearcase Assembly - L.H. (Incl. Ref. # 2-3)	1
14	281-1	Plug - Pipe Sq. Hd.	1
15	62-0120	Gear - Helical	1
16	62-1150	Bushing - Worm	1
17	32144-86	Screw - Hex Washer Hd.	6

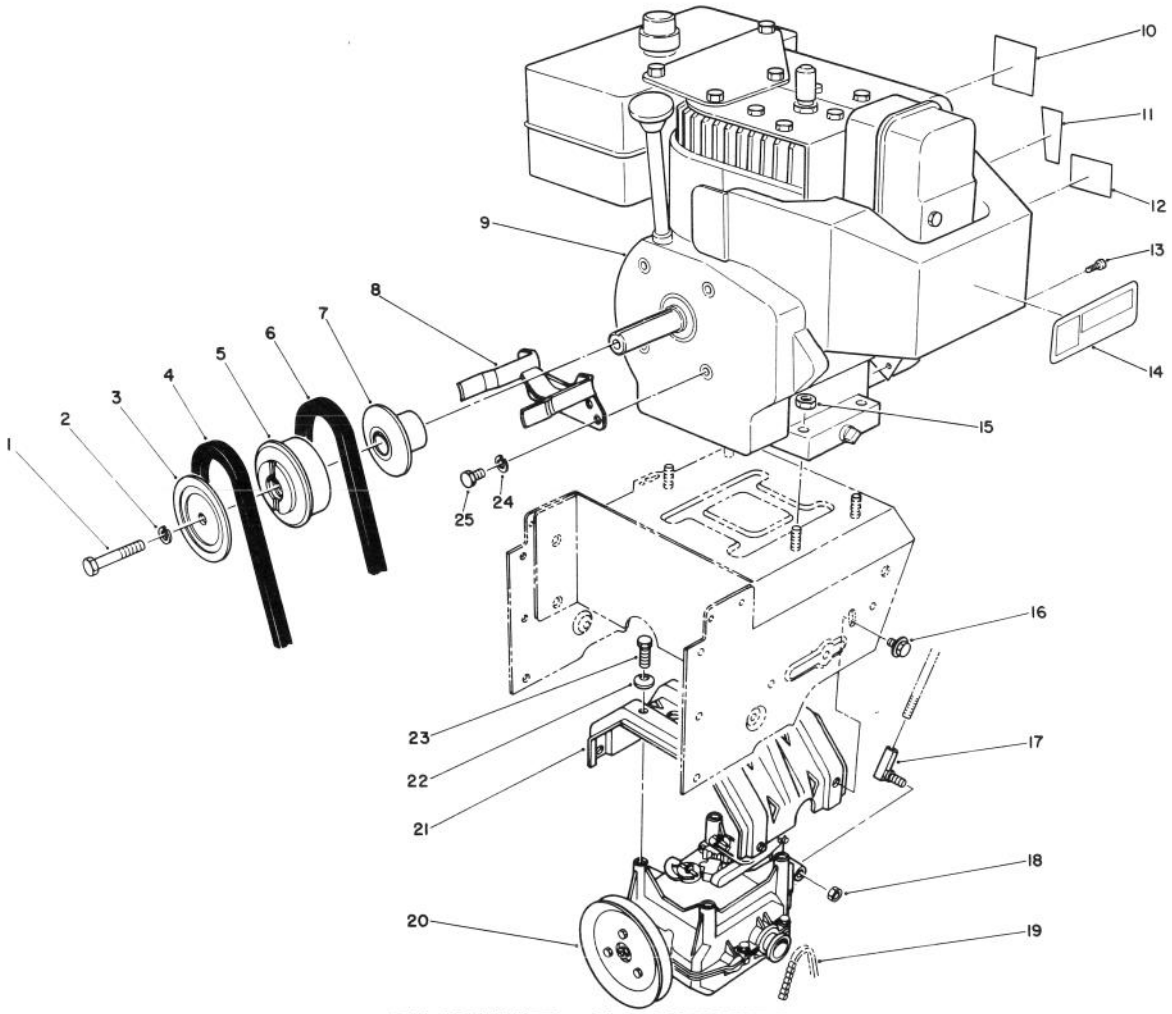

C-0048

ENGINE ASSEMBLY

Ref. No.	Part No.	Description	No. Used
1	3212-8	Screw - Cap Hex. Hd.	1
2	3253-6	Washer - Lock	1
3	62-0940	Sheave Half - Impeller	1
4	63-2962	Belt - Impeller	1
5	62-0930	Hub - Sheave	1
6	63-2951	Belt - Traction	1
7	62-0920	Sheave Half - Traction	1
8	68-7510	Guide - Belt	1
†9		Engine - Tecumseh Model No. HM80-155337N	1
10	62-5760	Decal - Primer	1
11	63-3190	Decal - Throttle	1
12	63-2410	Decal - Choke	1

Ref. No.	Part No.	Description	No. Used
13	32144-4	Screw - Wire Harness	1
14	63-2310	Decal - Hot Surface	1
15	32128-20	Nut - Lock	4
16	3234-7	Screw - Hex Flange Hd.	4
17	63-2640	Joint- Ball	1
18	3296-39	Nut - Lock	1
19	63-2930	Chain - Drive	1
20	66-8030	Transmission Assembly	1
21	63-2990	Frame - Transmission	1
22	3290-461	Washer - Belleville	4
23	11-0590	Screw - Cap Hex Hd.	4
24	3253-4	Washer - Lock	2
25	3210-1	Screw - Cap Hex Hd.	2

†Obtain from your local Tecumseh Dealer.

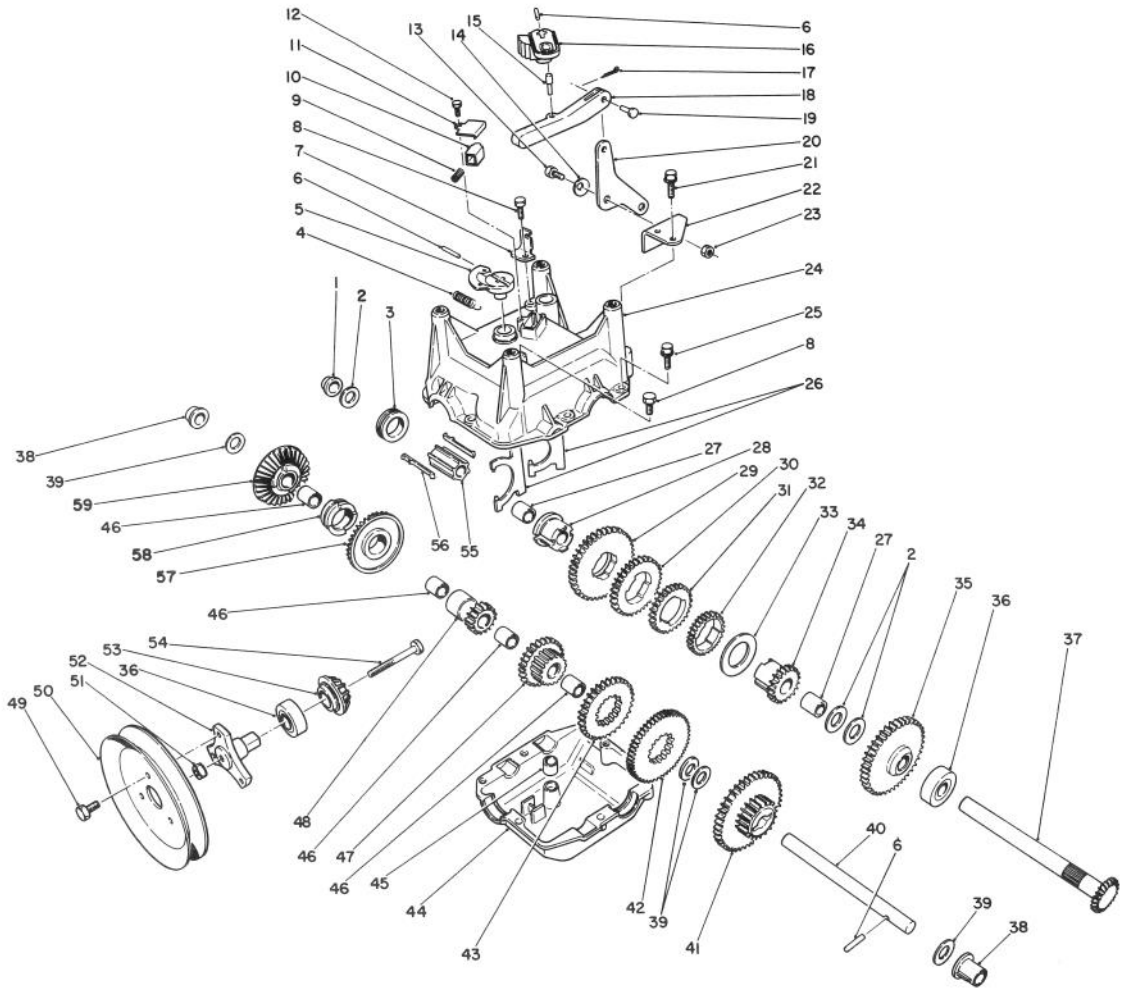

TRANSMISSION ASSEMBLY NO. 66-8030

Ref. No.	Part No.	Description	No. Used
1	62-1180	Bushing - Output (Flange)	1
2	252-59	Washer - Thrust	3
3	62-0430	Collar - Shift (Speed)	1
4	63-2920	Spring - Extension (F/R Return)	1
5	62-0880	Lever - Direction Shift	1
6	32121-106	Pin - Coil	3
7	62-1740	Bracket - Cable	1
8	32144-4	Screw - Self Tapping	2
9	63-2890	Spring - Compression (Detent)	1
10	62-1020	Button - Detent	1
11	62-1690	Cover - Detent	1
12	32104-71	Screw - Pan Hd.	1
13	63-3410	Bolt - Shoulder	1
14	3290-477	Washer - Curved	1
15	63-2190	Pin - Gearshift Link	1
16	62-0870	Lever - Gear Shift	1
17	3272-1	Pin - Cotter	1
18	62-0860	Link - Gearshift	1
19	283-3	Pin - Clevis	1
20	63-2600	Bellcrank	1
21	32104-95	Screw - Hex Washer Hd.	2

Ref. No.	Part No.	Description	No. Used
22	62-1190	Bracket - Bellcrank	1
23	3296-42	Nut - Lock	1
24	62-0490	Gear Case - Upper	1
25	32144-86	Screw - Hex Washer Hd.	6
26	62-1040	Yoke-Shift	2
27	62-1350	Bushing - Output	2
28	62-0320	Sleeve	1
29	62-0240	Gear - 45T	1
30	62-0220	Gear - 34T	1
31	62-0200	Gear - 27T	1
32	62-0250	Gear - 29T	1
33	63-2280	Washer - Thrust	1
34	62-0340	Sleeve - Gear 19T	1
35	62-0370	Gear - 41T	1
36	38-7820	Bearing - Ball	2
37	62-1080	Shaft - Output	1
38	62-1170	Bushing - Flange	2
39	257-10	Washer - Thrust	4
40	62-0330	Shaft - Imtermediate	1
41	62-0360	Gear - Compound 19T/41T	1
42	62-0260	Gear - 51T	1
43	62-0210	Gear - 33T	1
44	62-0480	Gear Case - Lower	1

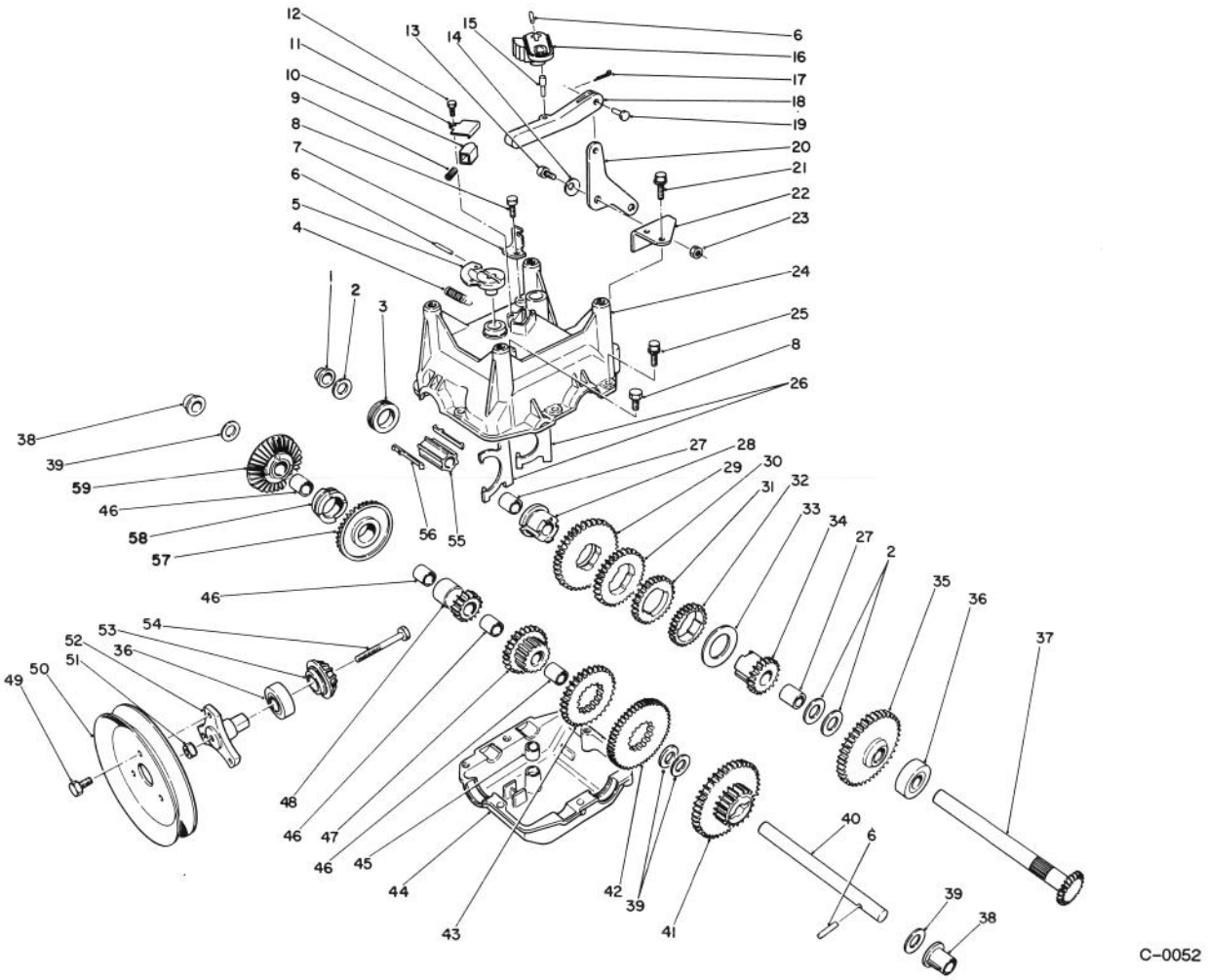

TRANSMISSION ASSEMBLY NO. 66-8030 (Continued)

Ref. No.	Part No.	Description	No. Used
45	29-9570	Bushing - Yoke	1
46	62-1160	Bushing - Intermediate	4
47	68-4310	Gear - 26T	1
48	62-0500	Gear - 15T	1
49	12-3270	Screw	3
50	62-1310	Pulley - Traction	1
51	32128-32	Nut - Flange Lock	1
52	62-0380	Hub - Pulley	1

Ref. No.	Part No.	Description	No. Used
53	62-0350	Pinion - Bevel 19T	1
54	321-15	Screw - Cap Hex Hd.	1
55	68-4320	Sleeve - Shift	1
56	62-0310	Key - Shift	2
57	67-5870	Gear - Bevel 36T	1
58	67-5880	Collar - Shift	1
59	67-5860	Gear - Bevel Reverse 36T	1

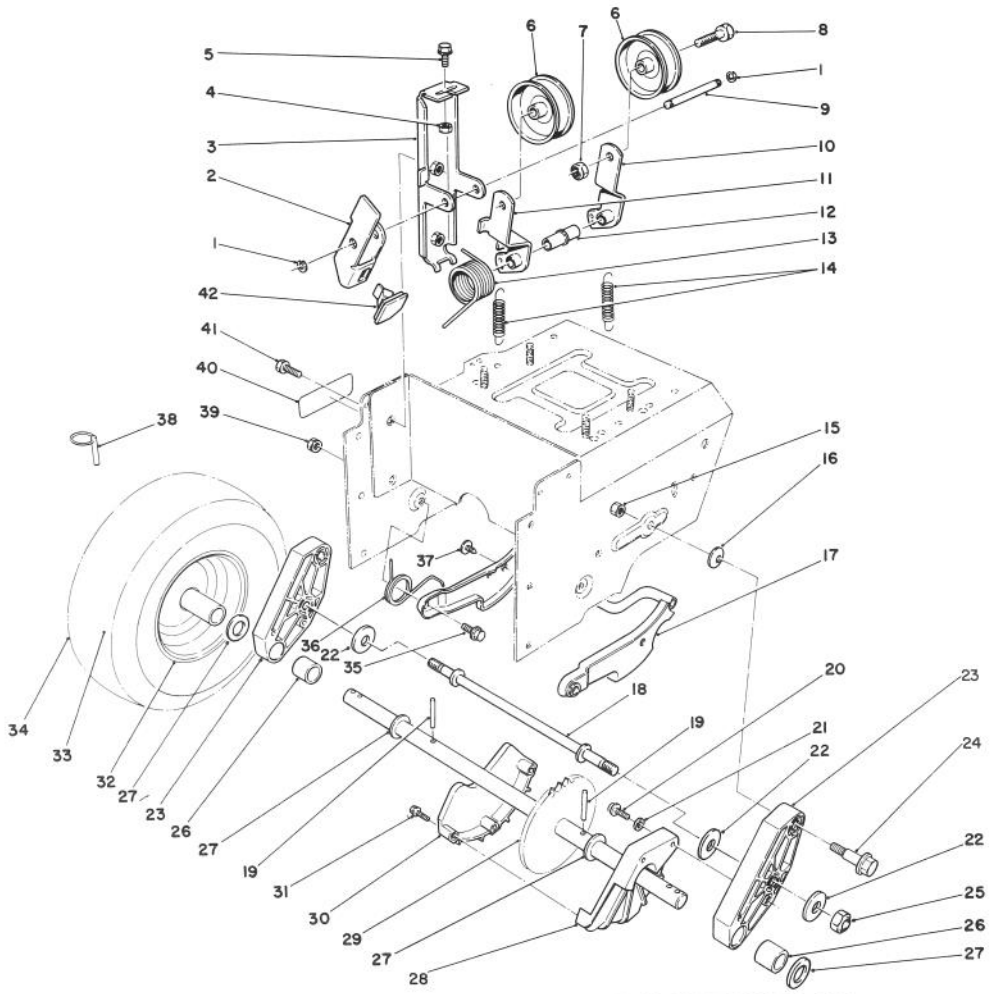

TRACTION DRIVE ASSEMBLY

Ref. No.	Part No.	Description	No. Used
1	32120-46	Ring - Retaining	2
2	63-2820	Arm - Brake	1
3	63-2850	Bracket - Idler Arm	1
4	3296-42	Nut - Lock	1
5	3234-13	Screw - Cap Hex. Hd.	1
6	3-4244	Pulley - Idler	2
7	3296-59	Nut - Lock	2
8	323-7	Screw - Cap Hex Hd.	2
9	62-0970	Pin - Idler	1
10	62-1260	Arm - Traction Idler	1
11	62-1280	Arm - Impeller Idler	1
12	62-1210	Bushing - Idler	1
13	63-2881	Spring - Torsion	1
14	63-2870	Spring - Extension	2
15	3296-39	Nut - Lock	2
16	3290-461	Washer - Belleville	2
17	62-0470	Latch - Arm	1
18	66-7720	Rod - Latch	1
19	32121-9	Pin - Roll	2
20	32144-4	Screw - Hex Flange Hd.	2
21	3256-1	Washer - Flat	2
22	63-3340	Washer	4

Ref. No.	Part No.	Description	No. Used
23	66-7740	Pivot Arm Assembly (Incl. Ref. # 26)	2
24	62-1330	Bolt - Shoulder	2
25	3296-23	Nut - Lock	2
26	63-2250	Bushing - Axle	2
27	252-80	Washer - Thrust	2
28	62-1010	Guard - Chain L.H.	1
29	63-2112	Axle Assembly	1
30	62-1000	Guard - Chain R.H.	1
31	32104-118	Screw - Hex Flange Hd.	3
32	241-127	Rim - Wheel	2
33	232-48	Tube - Inner	2
34	231-123	Tire	2
35	5-2490	Bolt - Shoulder	2
36	63-2740	Spring - Torsion	1
37	3290-476	Fastener - Panel	1
38	3290-243	Pin - Klik	2
39	3296-47	Nut - Lock	2
40	63-3470	Decal - Adjustment	1
41	3234-7	Screw - Hex Flange Hd.	2
42	66-8060	Pad - Brake	1
*	67-9230	Wheel & Tire Assembly (Incl. Ref. #32-34)	1
*	63-3040	Tire Chains Kit (Optional)	1

*Not Illustrated

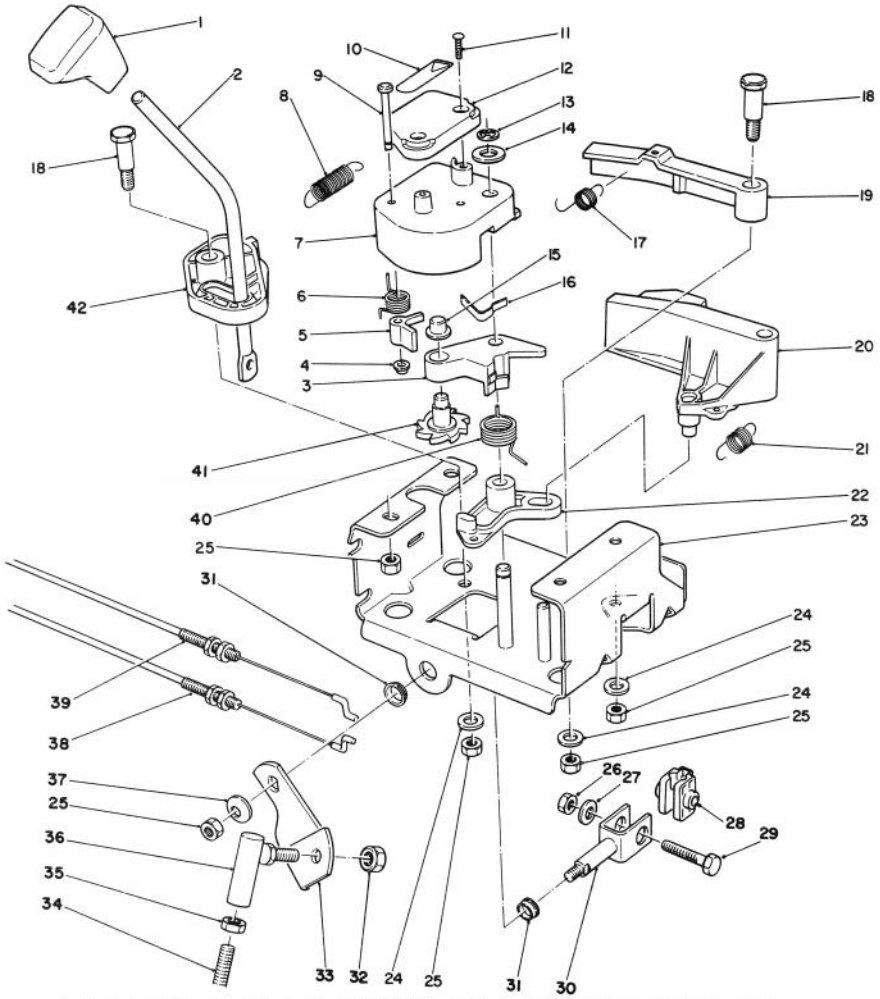

C-0054

TRACTION LINKAGE ASSEMBLY

Ref. No.	Part No.	Description	No. Used
1	62-1290	Knob - Shift	1
2	67-9240	Rod - Shift (Upper)	1
3	62-1110	Lever - Index Wheel	1
4	3290-422	Nut - Push	1
5	62-0180	Tang - Index	1
6	62-1650	Spring - Torsion	1
7	62-1100	Lever - Latch	1
8	63-2220	Spring - Extension (Latch Lever)	1
9	63-2610	Pin - Tang	1
10	63-2480	Decal - #2	1
11	32104-118	Screw - Pan Hd.	2
12	62-1140	Cover - Latch	1
13	32120-46	Ring - Retaining	1
14	257-9	Washer - Thrust	1
15	3290-320	Nut - Push	1
16	62-1710	Spring - Flat	1
17	63-2240	Spring - Extension (Lockout)	1
18	63-2650	Screw - Shoulder	2
19	62-1700	Lever - Lockout	1
20	62-1130	Lever - Reverse	1

Ref. No.	Part No.	Description	No. Used
21	63-2230	Spring - Extension (Reverse Lever)	1
22	62-1120	Lever - Reverse	1
23	63-2150	Frame - Control	1
24	3256-23	Washer - Flat	3
25	3296-29	Nut - Lock	7
26	3296-42	Nut - Lock	1
27	3256-1	Washer - Flat	1
28	67-9250	Retainer - Shift Rod	1
29	321-43	Screw - Cap Hex. Hd.	1
30	66-7730	Clevis	1
31	256-296	Bushing - Nyliner	2
32	3296-39	Nut - Lock	1
33	63-2630	Bracket - Shift	1
34	63-2830	Rod - Shift (Lower)	1
35	3220-3	Nut - Jam	2
36	63-2640	Joint - Ball	1
37	3290-456	Washer - Belleville	1
38	63-2210	Cable - Gearbox	1
39	63-2200	Cable - Latch	1
40	63-2270	Spring - Torsion	1
41	62-0170	Wheel - Index	1
42	62-1470	Base - Lockout	1

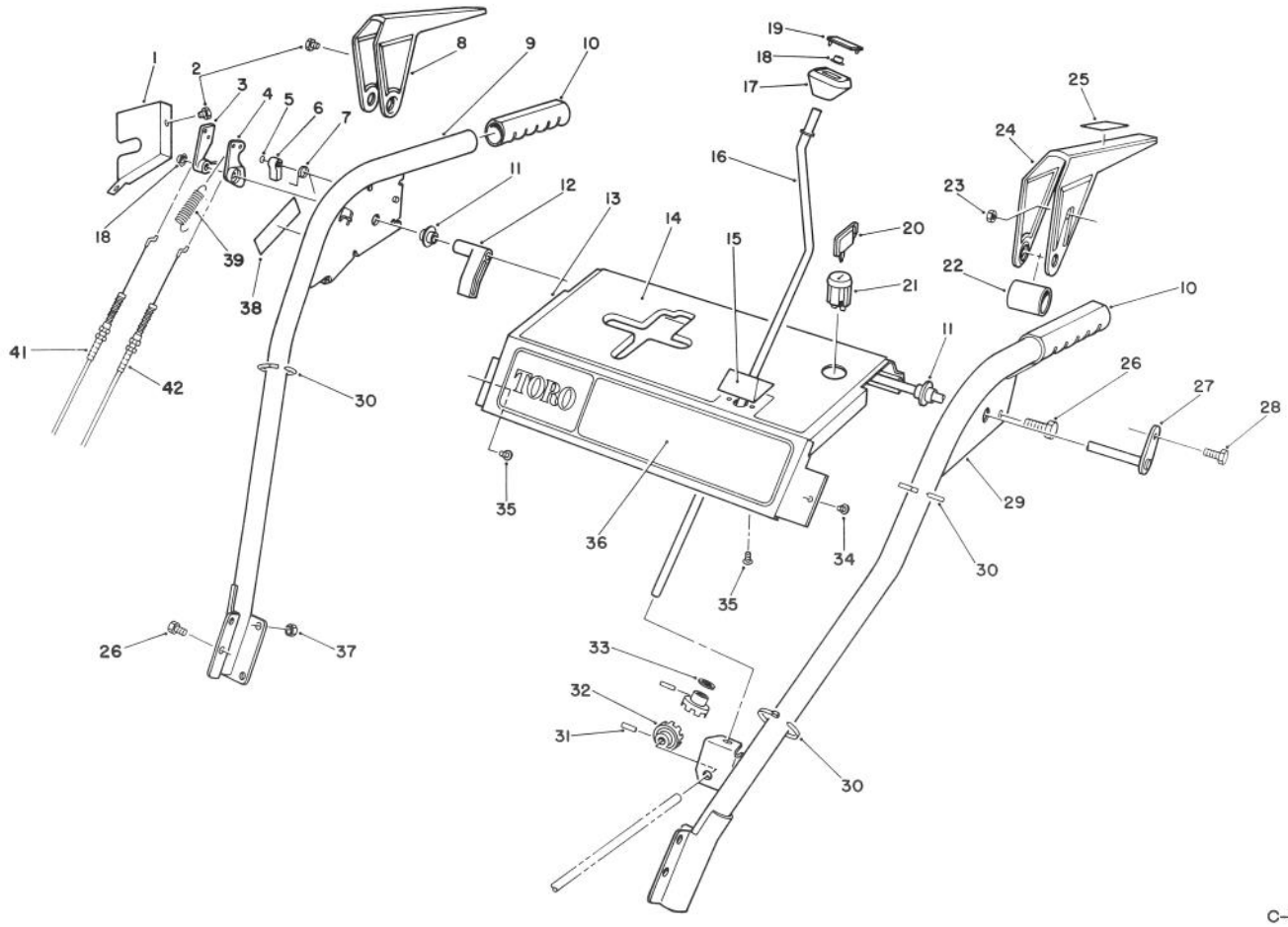

C-0055

HANDLE ASSEMBLY

Ref. No.	Part No.	Description	No. Used
1	63-2170	Cover - Lever Lock	1
2	2210-250	Screw	3
3	62-0300	Tang - Locking	1
4	62-0290	Cam - Release	1
5	32151-66	Ring - Retaining	1
6	62-0280	Latch - Lock	1
7	63-2910	Spring - Torsion	1
8	62-1050	Lever - Impeller	1
9	62-1381	Handle - R.H.	1
10	66-7850	Handlegrip	2
11	62-1070	Bushing - Lever	2
12	62-1640	Lever - Trip	1
13	66-8100	Panel - Control	1
14	63-2550	Decal - Panel Top	1
15	62-1490	Plate - Guide	1
16	63-2160	Rod - Chute Crank	1
17	62-1320	Knob - Chute Control	1
18	3290-320	Nut - Push	2
19	62-1520	Cover - Knob	1
20	62-7770	Key - Switch	1
21	40-5940	Switch - On/Off	1

Ref. No.	Part No.	Description	No. Used
22	3296-2	Nut - Lock	1
23	62-1060	Lever - Traction	1
24	63-3380	Spacer - Traction Lever	1
25	63-3050	Decal - Lever	1
26	3234-7	Screw - Hex Flange Hd.	6
27	63-2030	Rod - Cross	1
28	3290-359	Screw	1
29	66-8091	Handle - L.H.	1
30	3290-378	Tie - Cable	3
31	32121-50	Pin - Roll	2
32	62-1460	Gear - Universal	2
33	62-1230	Washer - Rubber	1
34	32104-76	Screw - Self Tapping	2
35	32104-118	Screw - Pan Hd.	2
36	63-2520	Decal - Panel Front	1
37	3296-47	Nut - Lock	4
38	63-3470	Decal - Adjustment	1
39	63-2720	Spring - Extension	1
40	63-2710	Cable - Traction	1
41	63-2700	Cable - Impeller	1
*	63-3430	Harness - Wire	1

*Not Illustrated

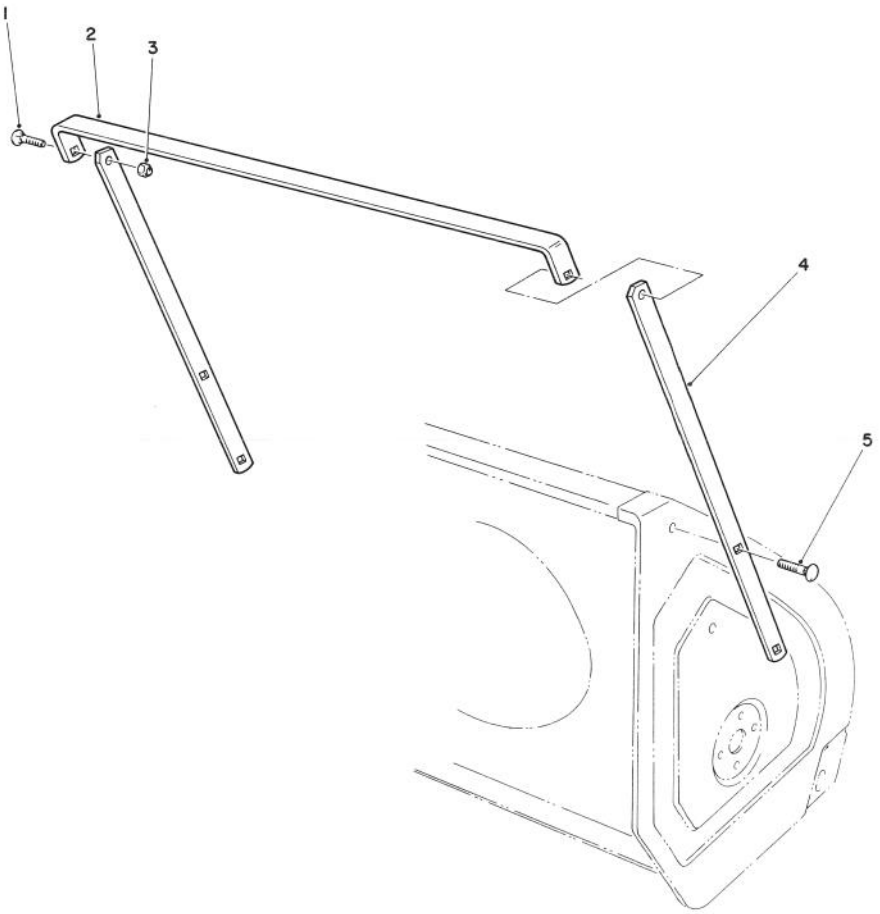

C–0068

DRIFT BREAKER ASSEMBLY NO. 66–7970 (Optional)

Ref. No.	Part No.	Description	No. Used
1	3230–16	Bolt – Carriage	2
2	68–7181	Breaker – Top (28")	1
3	3296–29	Nut – Lock	6

Ref. No.	Part No.	Description	No. Used
4	68–7170	Breaker – Side	2
5	3230–1	Bolt – Carriage	4

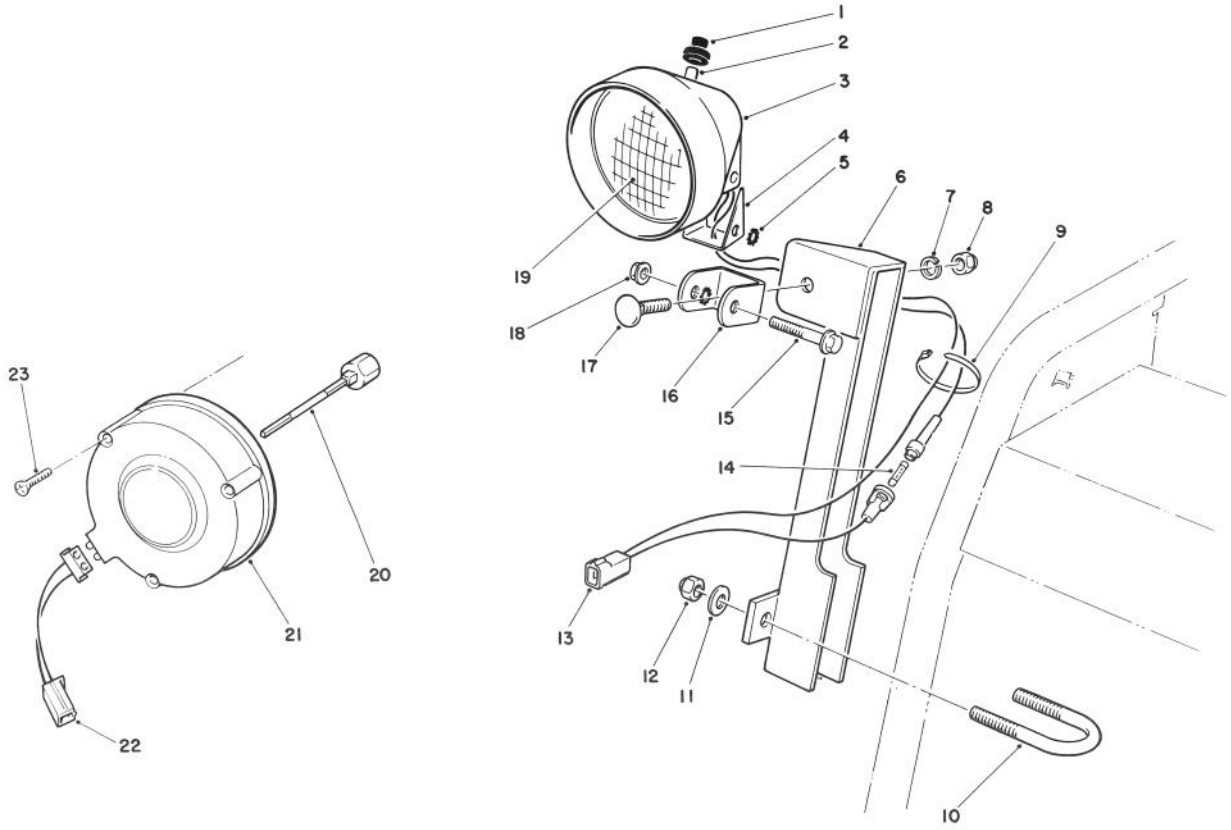

C-0070

LIGHT KIT NO. 66-7930 (Optional)

Ref. No.	Part No.	Description	No. Used
1	218-473	Boot - Switch	1
2	218-553	Switch Assembly	1
3	218-552	Bucket - Headlamp	1
4	218-554	Bracket	1
5	3255-8	Washer - Lock	2
6	68-7110	Mount - Lamp	1
7	3253-21	Washer - Lock	1
8	3217-7	Nut - Hex.	1
9	3290-378	Tie Wrap	2
10	68-7140	Bolt - U	1
11	3256-23	Washer - Flat	2
12	3296-29	Nut - Lock	2
13	218-555	Wire Assembly	1
†14		Fuse - 7-1/2 Amp.	1

Ref. No.	Part No.	Description	No. Used
15	322-13	Screw - Hex. Flange Hd.	1
16	218-556	Bracket - U	1
17	3231-2	Bolt - Carriage	1
18	32128-35	Nut - Flange Lock	1
19	218-16	Bulb - Sealed Beam	1
20	2210-268	Shaft - Alternator 3"	1
*	2210-269	Shaft - Alternator 4"	1
21	2210-274	Alternator	1
22	2210-272	Connector - Light	1
23	2210-273	Screw - Self Tapping	3
*	2210-270	Tube - Centering 3"	1
*	2210-271	Tube - Centering 4"	1
*	54-9871	Headlamp Assembly (Incl. Ref. #1-5, 7, 8 & 13-19)	1

*Not Illustrated
†Obtain Locally

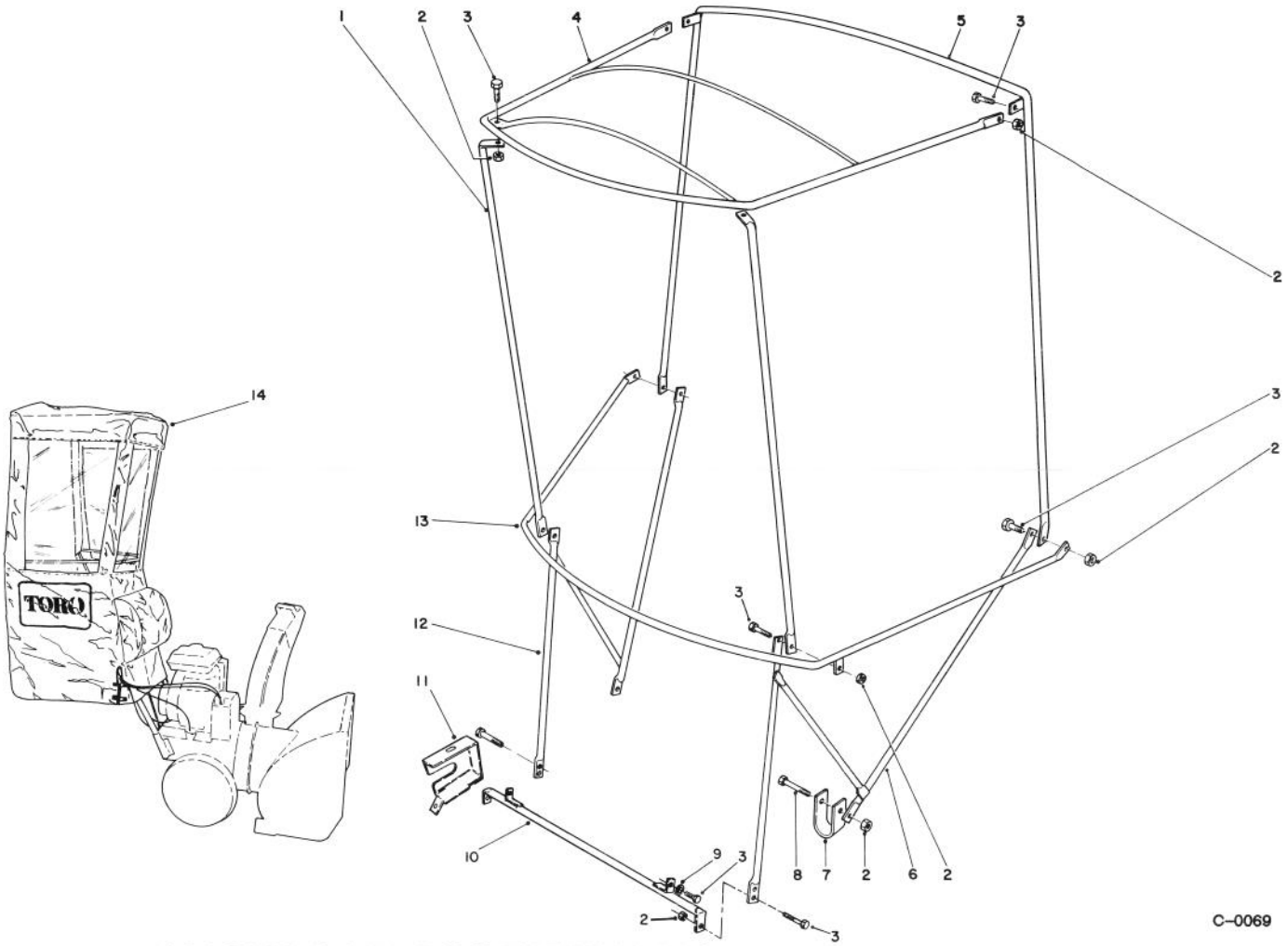

SNOW CAB ASSEMBLY NO. 66-6200 (Optional)

Ref. No.	Part No.	Description	No. Used
1	12-8040	Post - Corner	2
2	32153-4	Nut - Lock	14
3	321-4	Screw - Cap Hex. Hd.	12
4	12-8010	Frame - Top	1
5	12-8030	Bow - Vertical	1
6	66-6230	Bracket - L.H.	1
7	66-6240	Clamp - Loop	2

Ref. No.	Part No.	Description	No. Used
8	321-11	Screw - Cap Hex. Hd.	2
9	3256-58	Washer - Fender	2
10	66-6210	Bracket - Base	1
11	63-3330	Cover - Lever	1
12	66-6220	Bracket - R.H.	1
13	12-8020	Bow - Horizontal	1
†14		Cover - Vinyl	1

†Not sold separate

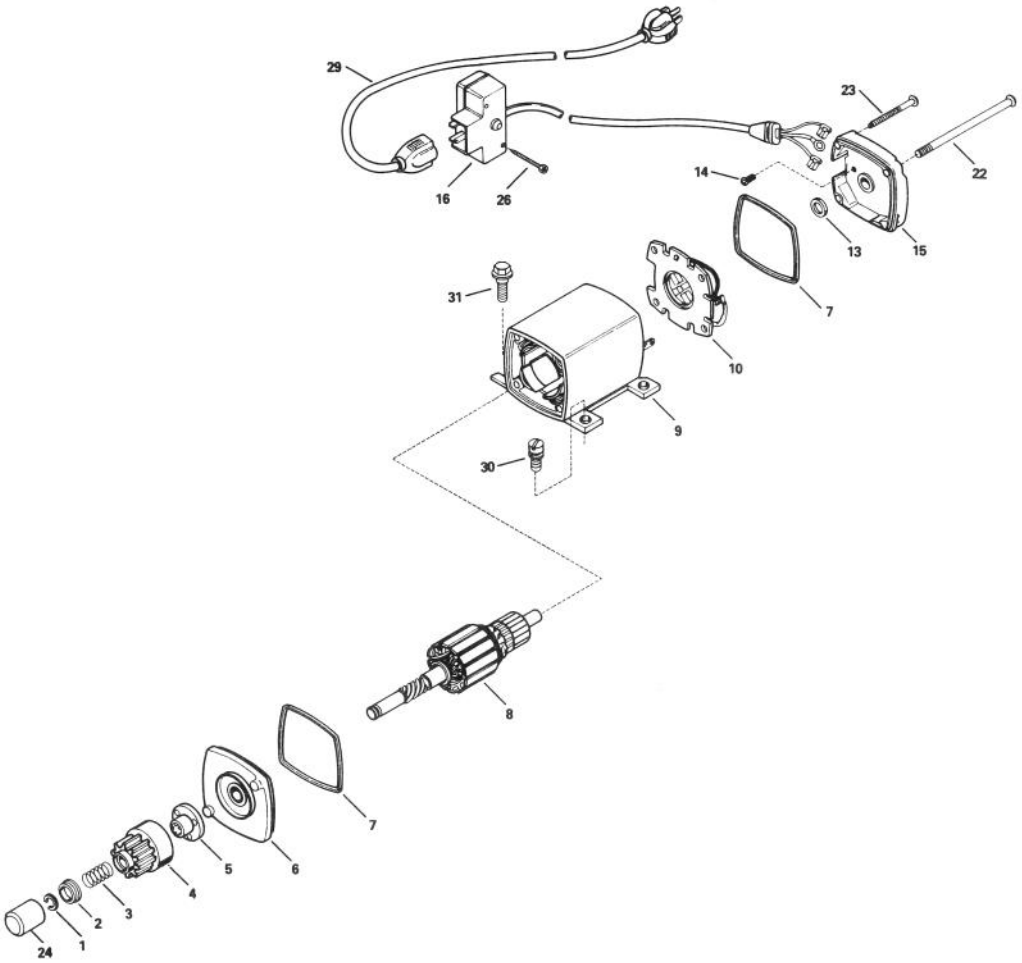

ELECTRIC STARTER MOTOR KIT NO. 37–4810 (Optional)

Ref. No.	Part No.	Description	No. Used
1	33842	Ring – Retainer	1
2	33430	Retainer – Spring	1
3	33431	Spring – Anti-Drift	1
4	33432	Gear	1
5	33433	Nut – Engaging	1
6	35449	Drive End Cap Assembly (Incl. Ref. #7)	1
7	35450	Seal – O-Ring	2
8	33541A	Armature	1
9	35451	Housing Assembly	1
10	35452	Card Assembly – Brush	1
13	590500	Washer – Thrust	1

Ref. No.	Part No.	Description	No. Used
14	33441	Screw – Ground	1
15	35453	Commutator End Cap Assy. (Incl. Ref. #7)	1
16	35454	Switch Box Assembly	1
22	35455	Bolt – Case	2
23	35456	Screw – Grounding	1
24	33451	Cover – Dust	1
26	650819	Screw – Hex. Hd. Self Tap	2
29	32450A	Cord – Extension (10" 6')	1
30	30063	Screw – Fil. Hd.	2
31	650820	Screw – Shoulder Hex. Hd.	2

Note: Obtain individual parts from your local Tecumseh dealer.

ENGINE TECUMSEH MODEL NO. HM80–155337N

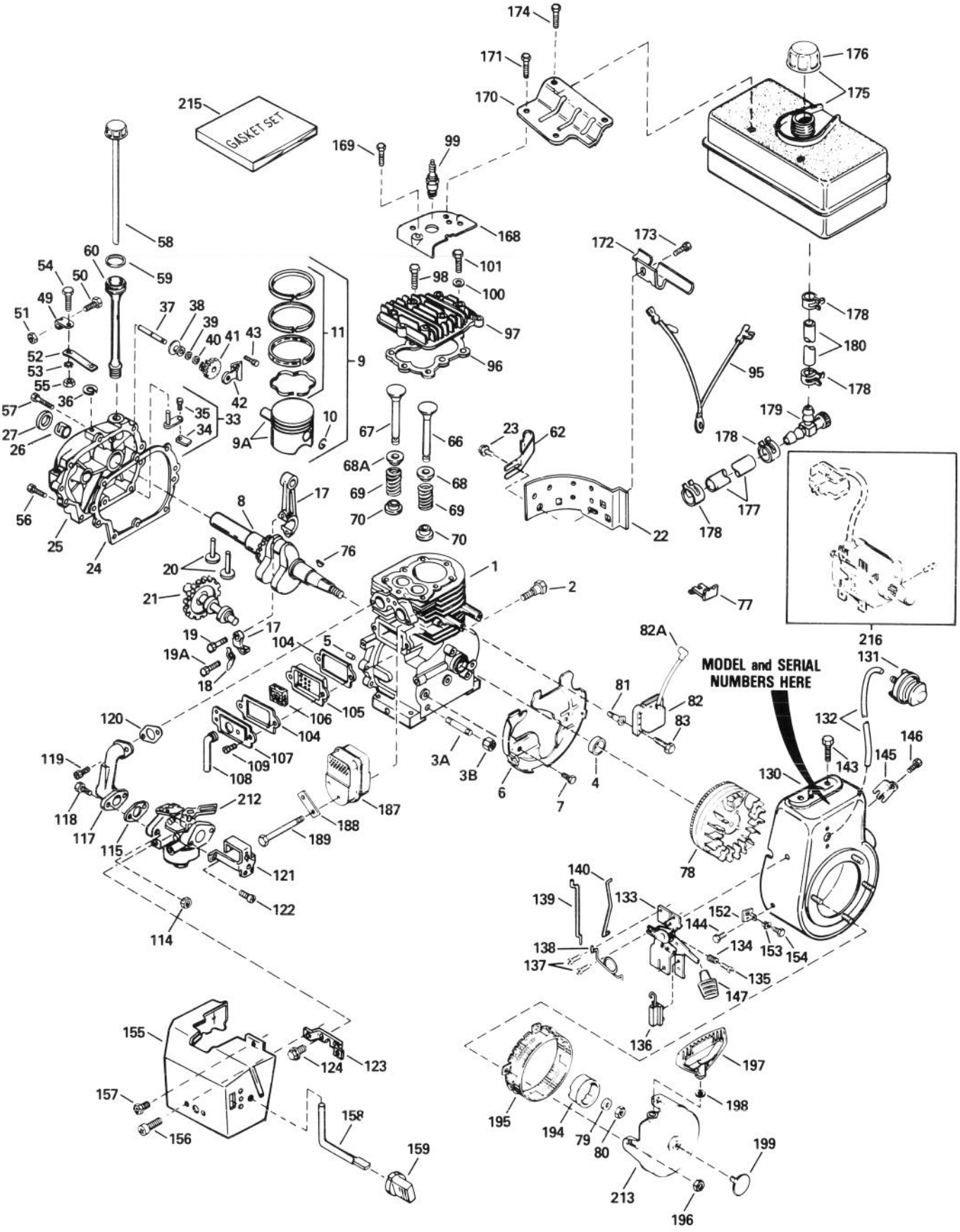

ENGINE TECUMSEH MODEL NO. HM80–155337N

Ref. No.	Part No.	Description	No. Used
1	35385	Cylinder (Incl. Ref. #4 & 5)	1
2	650820	Screw – Shoulder Hex. Hd.	2
3A	34171	Nipple – Pipe	1
3B	30969	Cap – Oil Drain	1
4	35319	Seal 0 Oil	1
5	27652	Pin – Dowel	2
6	35326	Baffle – Blower Housing	1
7	650561	Screw – Hex. Washer Hd.	2
8	35571	Crankshaft	1
9	34552	Piston Pin & Ring Assy. (Std.) (Incl. Ref. #9A–11)	1
*	34553	Piston Pin & Ring Assy. (.01" OS.) (Incl. Ref. #9A–11)	1
*	34554	Piston Pin & Ring Assy. (.02" OS.) (Incl. Ref. #9A–11)	1
9A	34329A	Piston & Pin Assy. (Std.) (Incl. Ref. #10)	1
*	34330A	Piston & Pin Assy. (.01" OS.) (Incl. Ref. #10)	1
*	34331A	Piston & Pin Assy. (.02" OS.) (Incl. Ref. #10)	1
10	27888	Ring – Piston Pin Retaining	2
11	34332	Ring Set – Piston (Std.)	1
*	34333	Ring Set – Piston (.01" OS.)	1
*	34334	Ring Set – Piston (.02" OS.)	1
17	35373A	Connecting Rod Assy. (Incl. Ref. #18,19 & 19A)	1
18	35374	Dipper – Oil	1
19	650908	Bolt – Connecting Rod	1
19A	650882	Bolt – Connecting Rod	1
20	34034	Lifter – Valve	2
21	35375	Camshaft	1
22	33273A	Extension – Blower Housing	1
23	650128	Screw – Fill. Hd.	1
†24	35262	Gasket – Cylinder Cover	1
25	35376	Cylinder Cover Assy. (Incl. Ref. #26, 27 & 37)	1
26	35377	Bearing – Cylinder Cover	1
27	35319	Seal – Oil	1
33	30699C	Governor Rod Assy. (Incl. Ref. #34–35)	1
34	30700	Yoke – Governor	1
35	650494	Screw – Fil. Hd.	1
36	29642	Ring – Retaining	1
37	31845	Shaft – Governor	1
38	30588A	Spool – Governor	1
39	30590A	Washer – Flat	1
40	29193	Ring – Retaining	1
41	35378	Gear – Governor (Incl. Ref. #39)	1
42	33369	Bracket – Governor Gear	1
43	650836	Screw – Hex. Washer Hd.	2
49	29916	Clamp – Governor Lever	1
50	29826	Screw – Hex. Washer Hd.	1
51	29216	Nut – Lock	1
52	33454	Lever – Governor	1
53	29918	Washer – Lock	1
54	650548	Screw – Hex. Washer Hd.	1
55	30322	Nut – Lock	1
56	650832	Screw – Hex. Washer Hd.	1
57	650833	Screw – Hex. Washer Hd.	7
58	35555	Dipstick – Oil	1
59	35499	Seal – O–Ring	1
60	35554	Tube – Oil Fill	1
62	35540	Clip – Fuel Tube	1
66	27878A	Valve – Exhaust (Std.) (Incl. Ref. #70)	1
*	27880A	Valve – Exhaust (.03" OS.) (Incl. Ref. #70)	1
67	34035	Valve – Intake (Std.) (Incl. Ref. #70)	1
*	34036	Valve – Intake (.03" OS.) (Incl. Ref. #70)	1
68	27882	Cap – Upper Valve Spring	1
68A	34689	Seal – Intake Valve2	
69	27881	Spring – Valve	2
70	32581	Cap – Lower Valve Spring	2
76	32589	Key – Flywheel	1
77	29443	Clip – Spring	1
78	611091	Flywheel/Gear	1
79	650880	Washer – Lock	1
80	650881	Nut – Flywheel	1
81	650872	Stud – Solid State Mounting	2
82	35135	Solid State Assembly	1
82A	610118	Cover – Spark Plug	1
83	650814	Screw – Hex. Hd.	1
95	35253	Wire – Ground	1
†96	34041	Gasket – Cylinder Head	1
97	34030	Head Cylinder	1
98	6021A	Screw – Hex. Flange Hd.	7
99	35395	Plug – Spark (Champion RJ–19LM or Equivalent)	1
100	650691	Washer – Flat	2
101	650727	Screw – Special	2
†104	27896	Gasket – Breather	2
105	28423	Body – Breather	1
106	28424	Element – Breather	1
107	28425	Cover – Breather	1
108	35350	Tube – Breather	1
109	650128	Screw – Fil. Hd.	2
114	29752	Nut/Lockwasher	2
†115	33263	Gasket – Carburetor	1
117	33877	Pipe – Intake	1
118	30088A	Screw – Fil. Hd.	2
119	650378	Screw – Fil. Hd.	2
†120	27915	Gasket – Intake Pipe	1
121	34587	Bracket – Choke	1
122	28820	Screw – Fil. Hd.	2

*Not Illustrated
†Included in Gasket Set Ref. #33279E.

ENGINE TECUMSEH MODEL NO. HM80–155337N (Continued)

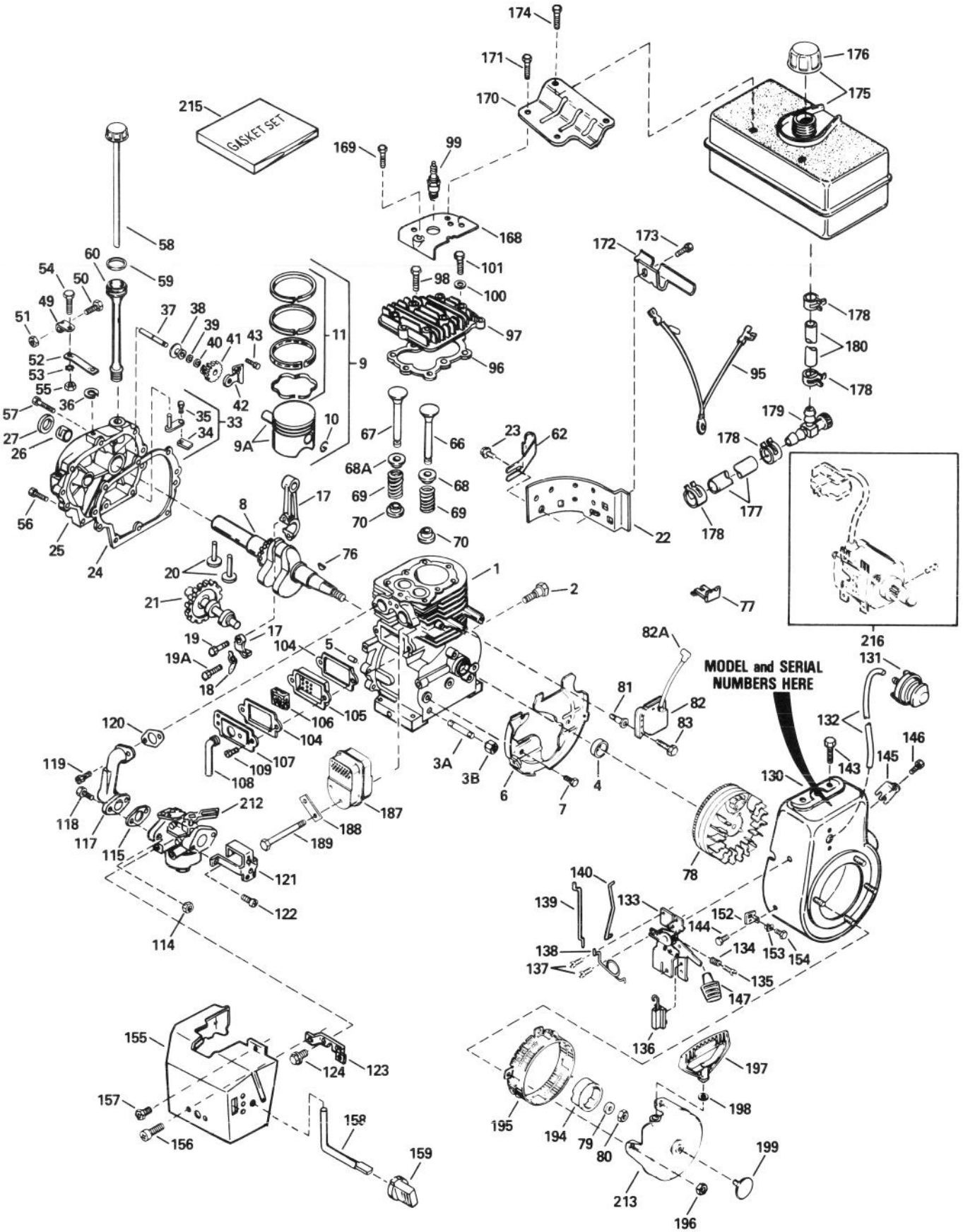

ENGINE TECUMSEH MODEL NO. HM80–155337N (Continued)

Ref. No.	Part No.	Description	No. Used
123	33377	Bracket – Carburetor Cover	1
124	650767	Screw – Hex. Washer Hd.	2
130	35447	Housing – Blower	1
131	570682	Primer Assembly	1
132	32180C	Line – Primer	1
133	34664	Control Bracket Assembly (Incl. Ref. #134–136 & 138)	1
134	31342	Spring – Compression	1
135	650549	Screw – Fil. Hd.	1
136	610973	Terminal Assembly	1
137	650821	Screw – Hex. Washer Hd.	2
138	34663	Spring – Speed Control	1
139	34667	Link – Governor	1
140	33878	Link – Governor to Throttle	1
143	650788	Screw – Hex. Hd.	2
144	29747B	Screw – Hex. Hd.	2
145	33013	Cover – Starter Hole	1
146	650760	Screw – Pan Hd.	1
147	35440	Knob – Control	1
152	34126	Bracket – Grommet Mount	1
153	28545	Grommet – Plastic	1
154	650760	Screw – Pan Hd.	1
155	35057	Cover – Carburetor	1
156	28942	Screw – Hex. Washer Hd.	2
157	650765	Screw – Hex. Washer Hd.	1
158	34586	Rod – Choke	1
159	35438	Knob – Choke	1

Ref. No.	Part No.	Description	No. Used
168	33272A	Cover – Cylinder Head	1
169	650802	Screw – Hex. Washer Hd.	1
170	34154	Plate – Fuel Tank	1
171	650713	Screw – Hex. Hd.	1
172	34155	Bracket – Fuel Tank	1
173	650561	Screw – Hex. Washer Hd.	1
174	650665	Screw – Hex. Washer Hd.	2
175	34156A	Fuel Tank Assy. (Incl. Ref. #176 & 178)	1
176	35355	Cap – Fuel Tank	1
177	30705	Line – Fuel	1
178	26460	Clamp – Fuel Line	4
179	32961	Valve – Fuel Shut–off	1
180	29774	Line – Fuel	1
187	35056	Muffler	1
188	31588	Plate – Lock	1
189	792093	Screw – Hex. Flange Hd.	2
194	35287	Hub – Starter	1
195	35446	Screen – Starter	1
196	29752	Nut/Lockwasher	4
197	590574	Handle – Starter	1
198	650168	Washer – Flat	1
199	35392	Plug – Starter	1
212	632334	Carburetor Assembly (Incl. Gasket #33263)	1
213	590630	Rewind Starter Assembly	1
215	33279E	Gasket Set	1

*Not Illustrated
†Included in Gasket Set Ref. #33279E.

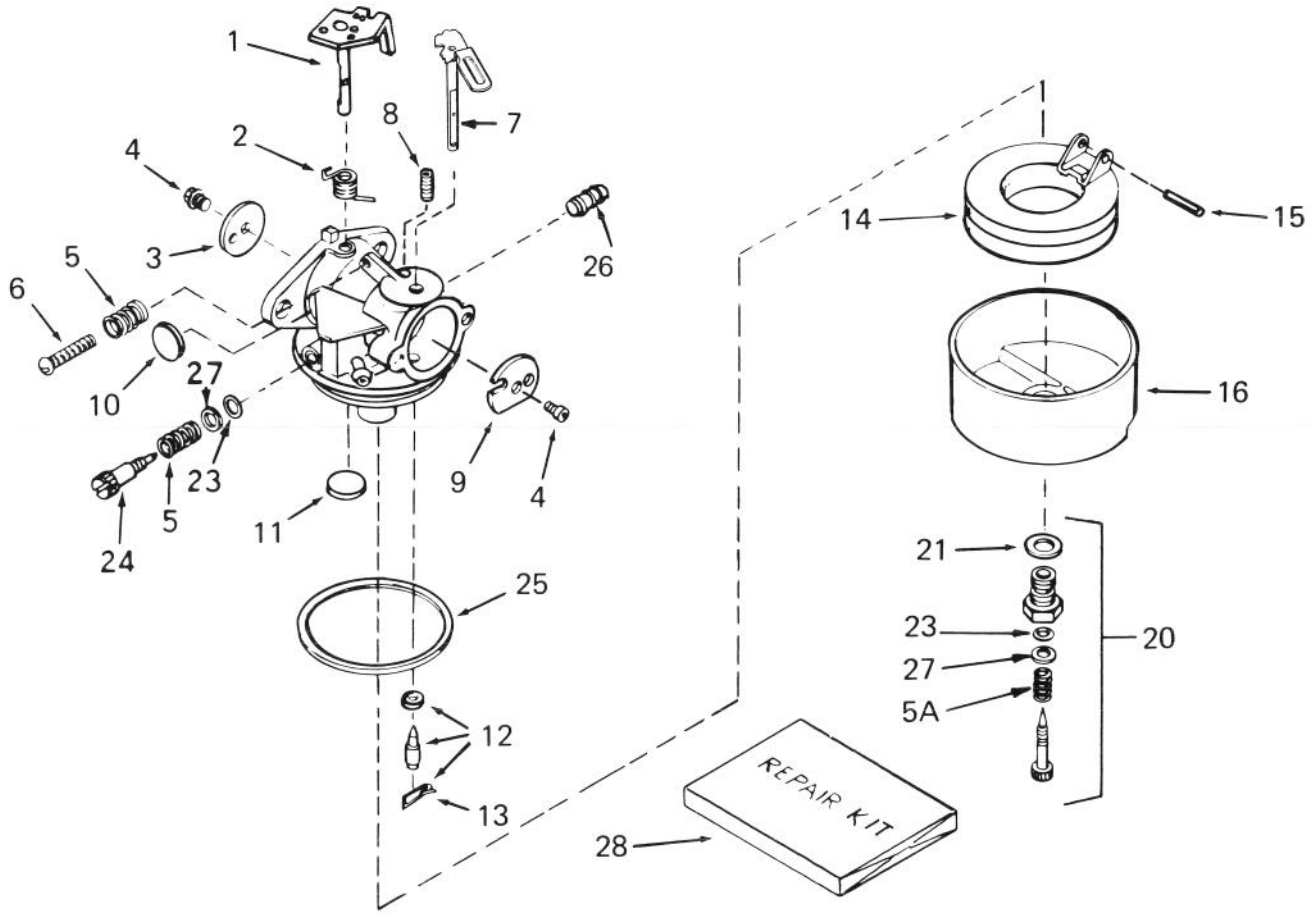

CARBURETOR TECUMSEH NO. 632334

Ref. No.	Part No.	Description	No. Used
1	631776	Shaft/Lever – Throttle	1
2	631970	Spring – Throttle Return	1
3	631778	Shutter – Throttle	1
4	650506	Screw – Shutter	2
5	630766	Spring – Regulating Screw	1
5A	630738	Spring – Adjustment Screw	1
6	650417	Screw – Idle Regulating	1
7	632112	Shaft/Lever – Choke	1
8	630735	Spring – Choke Positioning	1
9	632174	Shutter – Choke	1
*10	630748	Plug – Welch	1
*11	631027	Plug – Welch	1
*12	631021	Inlet Needle, Seat & Clip Assy. (Incl. Ref. #13)	1

Ref. No.	Part No.	Description	No. Used
13	631022	Clip – Inlet Needle	1
14	632019	Float – Carburetor	1
*15	631024	Shaft – Float	1
16	631867	Bowl – Float	1
*20	632239	Adjustment Screw Assy. (Incl. Ref. #5A, 21, 23 & 27)	1
21	27110	Gasket – Bowl to Body	1
*23	630740	O-Ring – Adjustment Screw	1
*24	630898	Screw – Idle Adjustment	1
*25	631028	Gasket – Bowl to Body	1
26	632164	Fitting – Fuel Inlet	1
27	630739	Washer – Flat	1
28	632240	Repair Kit	1

*Included in Repair Kit Ref. #28.

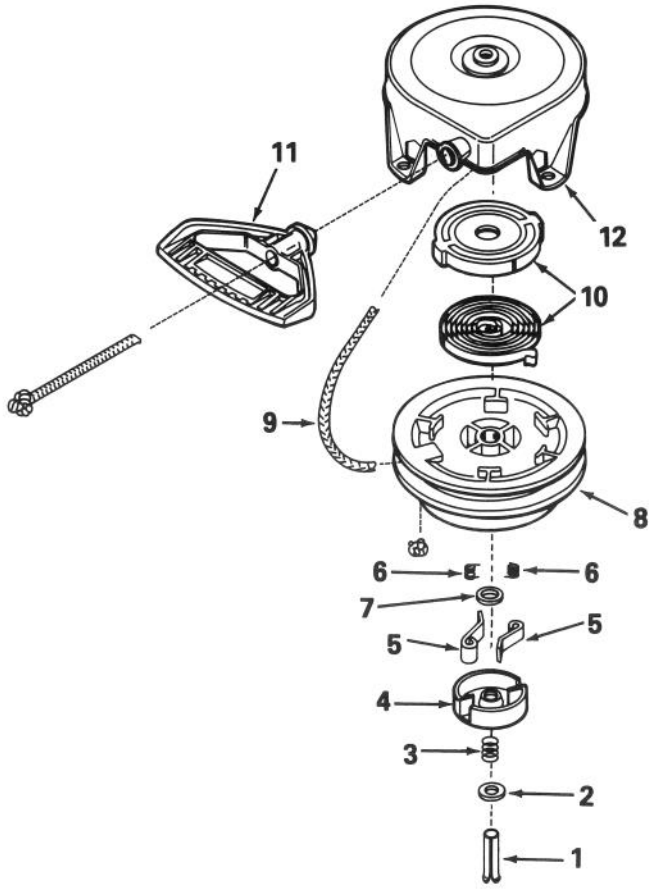

REWIND STARTER TECUMSEH NO. 590630

Ref. No.	Part No.	Description	No. Used
1	590599A	Pin – Spring (Incl. Ref. #7)	1
2	590600	Washer	1
3	590598	Spring – Brake	1
4	590627	Retainer	1
5	590641	Dog – Starter	2
6	590617	Spring – Dog	2

Ref. No.	Part No.	Description	No. Used
7	590601	Washer	1
8	590628	Pulley	1
9	590451A	Rope – Starter	1
10	590629	Spring & Keeper Assembly	1
‡11	590574	Handle – Starter	1
12	590631	Starter Housing Assembly	1

PRODUCT CHANGES

In an effort to make improvements available to TORO owners as quickly as possible, minor changes are incorporated into Toro's products from time to time that do not become immediatly shown in the Parts Catalog. If such a change has been made in your unit, which is not reflected in your manual, see your TORO Distributor or his Authorized TORO Service Dealer for information and part numbers.

IDENTIFICATION AND ORDERING

MODEL AND SERIAL NUMBERS

The Snowthrower has two identification numbers; a model number and a serial number. The two numbers are stamped on a decal which is located on the rear of the engine frame. In any correspondence concerning the snowthrower, supply model and serial numbers to assure that correct information and replacement parts are obtaineed.

To order replacement parts from an Authorized TORO Service Dealer, supply the following information:
1. Model and serial number of the snowthrower.
2. Part number, description, and the quantity of part(s) desired.

NOTE: Do not order by reference number if a parts catalog is being used; use the PART NUMBER.

COUNTRIES OTHER THAN THE UNITED STATES OR CANADA

Customers who have purchased TORO products exported from the United States or Canada should contact thier Toro Distributor (Dealer) to obtain guarantee policies for your country, province or state. If for any reason you are dissatisfied with your Distributor's service or have difficulty obtaining guarantee information, contact the TORO importer. If all other remedies fail, you may contact us at The Toro Company.

MAINTENANCE RECORD

Date								

Compliance with Radio Interference Regulations Certified.
Certifie Conforme au Reglement sur le Brouillage Radioelectrique.

T.P.S
LTS-805382

Litho In U.S.A.