Form No. 3354-657 Rev A

Dingo® 323 Compact Utility Loader

Model No. 22318—260000001 and Up

Operator's Manual

Register your product at www.Toro.com

Original Instructions (EN)

Warning

CALIFORNIA

Proposition 65 Warning

The engine exhaust from this product contains chemicals known to the State of California to cause cancer, birth defects, or other reproductive harm.

Important Because in some areas there are local, state, or federal regulations requiring that a spark-arrester be used on engines, a spark-arrester is available as an option for the traction unit. If a spark-arrester is required, contact your Toro dealer. Genuine Toro approved spark-arresters are approved by the USDA Forestry Service. It is a violation of the State of California PRC Section 4442 to use or operate the engine on any forest-covered, brush-covered, or grass-covered land, unless the engine is equipped with a spark-arrester, maintained in working order, or the engine is constricted, equipped, and maintained for the prevention of fire.

This spark ignition system complies with Canadian ICES-002.

Ce système d'allumage par étincelle de véhicule est conforme à la norme NMB-002 du Canada.

The enclosed Engine Owner's Manual is supplied for information regarding The U.S. Environmental Protection Agency (EPA) and the California Emission Control Regulation of emission systems, maintenance and warranty.

Keep this engine Owner's Manual with your unit. Should this engine Owner's Manual become damaged or illegible, replace immediately. Replacements may be ordered through the engine manufacturer.

Contents

	Page
Introduction	2
Safety	3
Safe Operating Practices	3
Slope Chart	6
Safety and Instruction Decals	7
Setup	9
Loose Parts	9
Installing the Valve Lever	9
Charging the Battery	9
Specifications	10
Attachments	10
Stability Data	11
Before Operating	12
Adding Fuel	12
Using Stabilizer/Conditioner	12
Checking the Oil Level	12
Removing Debris from the Traction Unit	13
Checking the Hydraulic Fluid	13
Tire pressure	14
Operation	14
Traction Unit Overview	14
Controls	15
Starting and Stopping the Engine	16
Driving Forward or Backward	16
Stopping the Traction Unit	17
Moving a Non-functioning Traction Unit	17
Using the Cylinder Locks	17
Installing and Removing Attachments	18
Securing the Traction Unit for Transport	19
Adjusting the Thigh Support	19
Maintenance	21
Recommended Maintenance Schedule	21
Removing/Installing the Hood	22
Greasing the Traction Unit	22
Servicing the Air Cleaner	22
Servicing the Engine Oil	23
Replacing the Battery	24
Servicing the Spark Plugs	25
Servicing the Hydraulic System	26
Replacing the Fuel Filter	27
Draining the Fuel Tanks	27
Cleaning and Storage	28
Troubleshooting	29
Schematics	31
Evaporative Emission Control Warranty Statement	35
The Toro Dingo Product Line Warranty	36

Introduction

Thank you for purchasing a Toro product.

All of us at Toro want you to be completely satisfied with your new product, so feel free to contact your local Authorized Service Dealer for help with service, genuine replacement parts, or other information you may require.

Whenever you contact your Authorized Service Dealer or the factory, always know the model and serial numbers of your product. These numbers will help the Service Dealer or Service Representative provide exact information about your specific product. You will find the model and serial number plate at the location shown in Figure 1.

© 2005 by The Toro Company

8111 Lyndale Avenue South
Bloomington, MN 55420-1196

Contact us at www.Toro.com

All Rights Reserved

Printed in the USA

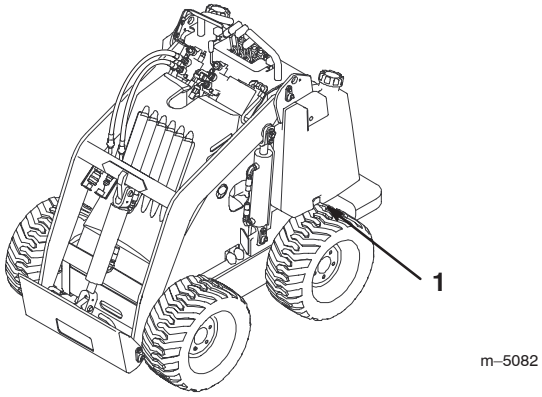

Figure 1

1. Model and serial number plate (will be in one of two locations)

For your convenience, write the product model and serial numbers in the space below.

Model No: _____

Serial No. _____

Read this manual carefully to learn how to operate and maintain your product correctly. Reading this manual will help you and others avoid personal injury and damage to the product. Although we design, produce and market safe, state-of-the-art products, you are responsible for using the product properly and safely. You are also responsible for training persons, who you allow to use the product, about safe operation.

The warning system in this manual identifies potential hazards and has special safety messages that help you and others avoid personal injury, even death. ***Danger***, ***Warning***, and ***Caution*** are signal words used to identify the level of hazard. However, regardless of the hazard, be extremely careful.

Danger signals an extreme hazard that will cause serious injury or death if the recommended precautions are not followed.

Warning signals a hazard that may cause serious injury or death if the recommended precautions are not followed.

Caution signals a hazard that may cause minor or moderate injury if the recommended precautions are not followed.

Two other words are also used to highlight information. *Important* calls attention to special mechanical information, and *Note* emphasizes general information worthy of special attention.

Safety

Improper use or maintenance by the operator or owner can result in injury. To reduce the potential for injury, comply with these safety instructions and always pay attention to the safety alert ⚠ symbol, which means CAUTION, WARNING, or DANGER—"personal safety instruction." Failure to comply with the instruction may result in personal injury or death.

Safe Operating Practices

This product is capable of amputating hands and feet. Always follow all safety instructions to avoid serious injury or death.

⚠ Warning ⚠

Engine exhaust contains carbon monoxide, an odorless, deadly poison that can kill you.

Do not run the engine indoors or in an enclosed area.

General Operation

- Read, understand, and follow all instructions in the operator's manual, in the video, and on the traction unit before starting. Also, read all attachment manuals where supplied
- Allow only responsible adults who are familiar with the instructions to operate the traction unit.
- Wear long pants and substantial shoes. Wearing safety glasses, safety shoes, hearing protection, and a hard hat are advisable and may be required by some local ordinances and insurance regulations.
- Ensure that the area is clear of other people before operating the traction unit. Stop the traction unit if anyone enters the area.
- Never carry passengers on attachments or on the traction unit.
- Always look down and behind before and while backing.
- Do not place your feet under the platform.
- Slow down before turning. Sharp turns on any terrain may cause loss of control.
- Never leave a running traction unit unattended. Always lower the loader arms, stop the engine, and remove the key before dismounting.

- Do not exceed the rated operating capacity, as the traction unit may become unstable which may result in loss of control.
- Do not carry a load with the arms raised. Always carry loads close to the ground. Do not step off of the platform with the load raised.
- Do not over-load the attachment and always keep the load level when raising the loader arms. Logs, boards, and other items could roll down the loader arms, injuring you.
- Never jerk the control levers; use a steady motion.
- Keep your hands, feet, hair, and loose clothing away from any moving parts.
- Operate only in daylight or good artificial light.
- Do not operate the traction unit while under the influence of alcohol or drugs.
- Watch for traffic when operating near or crossing roadways.
- Use extra care when loading or unloading the traction unit onto a trailer or truck.
- Do not touch parts which may be hot from operation. Allow them to cool before attempting to maintain, adjust, or service.
- Do not operate the traction unit with any of the covers or guards removed.
- Check for overhead clearances (i.e. branches, doorways, electrical wires) before driving under any objects and do not contact them.
- Before digging, have the area marked for underground utilities, and do not dig in marked areas.
- Before operating the traction unit with an attachment, ensure that the attachment is properly installed.

Slope Operation

Slopes are a major factor related to loss-of-control and tip-over accidents which can result in severe injury or death. All slopes require extra caution.

- Do not operate the traction unit on hillsides or slopes exceeding the angles recommended in the Stability Data section, page 11, and those in the attachment operator's manual. See also the slope chart on page 6.
- **Operate up and down slopes with the heavy end of the traction unit uphill.** Weight distribution changes. An empty bucket will make the rear of the traction unit the heavy end, and a full bucket will make the front of the traction unit the heavy end. Most other attachments will make the front of traction unit the heavy end.
- Raising the loader arms on a slope will affect the stability of the machine. Whenever possible, keep the loader arms in the lowered position when on slopes.
- Removing an attachment on a slope will make the rear of the traction unit heavy. Refer to the Stability Data section, page 11, to determine whether the attachment can be safely removed on the slope.
- Remove obstacles such as rocks, tree limbs, etc. from the work area. Watch for holes, ruts, or bumps, as uneven terrain could overturn the traction unit. Tall grass can hide obstacles.
- Use slow speed on slopes. Before starting the engine, put the pump selector lever in the slow (turtle) position so that you will not have to stop or shift while on the slope.
- Follow the recommendations in the attachment manuals for the use of counterweights to improve stability.
- Use only Toro approved attachments. Attachments can change the stability and the operating characteristics of the traction unit. Warranty may be voided if used with unapproved attachments.
- Keep all movements on slopes slow and gradual. Do not make sudden changes in speed or direction.
- Avoid starting or stopping on a slope. If tires lose traction, proceed slowly, straight down the slope.
- Avoid turning on slopes. If you must turn, turn slowly and keep the heavy end of the traction unit uphill.
- Do not operate near drop-offs, ditches, or embankments. The traction unit could suddenly turn over if a wheel goes over the edge of a cliff or ditch, or if an edge caves in.
- Do not operate on wet grass. Reduced traction could cause sliding.
- Do not park the traction unit on a hillside or slope without lowering the attachment to the ground and chocking the wheels.
- Do not try to stabilize the traction unit by putting your foot on the ground.

Children

Tragic accidents can occur if the operator is not alert to the presence of children. Children are often attracted to the traction unit and the work activity. Never assume that children will remain where you last saw them.

- Keep children out of the work area and under the watchful care of another responsible adult.
- Be alert and turn the traction unit off if children enter the area.

- Before and while backing, look behind and down for small children.
- Never carry children. They may fall off and be seriously injured or interfere with safe traction unit operation.
- Never allow children to operate the traction unit.
- Use extra care when approaching blind corners, shrubs, trees, the end of a fence, or other objects that may obscure vision.

Service

- Stop the engine and disconnect the spark plug wires before performing any service, repairs, maintenance, or adjustments.
- If any maintenance or repair requires the loader arms to be in the raised position, secure the arms in the raised position with the hydraulic cylinder locks included with traction unit.
- Never run a traction unit inside a closed area.
- Keep nuts and bolts tight. Keep equipment in good condition.
- Never tamper with safety devices. Check safety systems for proper operation before each use.
- Keep the traction unit free of grass, leaves, or other debris build-up. Clean up oil or fuel spillage. Allow the traction unit to cool before storing.
- Use extra care when handling gasoline and other fuels. They are flammable and vapors are explosive.
    - Use only an approved container.
    - Never remove the gas cap or add fuel when the engine is running. Allow the engine to cool before refueling. Do not smoke.
    - Never refuel the traction unit indoors.
    - Never store the traction unit or fuel container inside where there is an open flame, such as near a water heater or furnace.
    - Never fill a container while it is inside a vehicle, trunk, pick-up bed, or any surface other than the ground.
    - Keep container nozzle in contact with the tank during filling.
- Stop and inspect the equipment if you strike an object. Make any necessary repairs before restarting.
- Use only genuine replacement parts to ensure that original standards are maintained.
- Battery acid is poisonous and can cause burns. Avoid contact with skin, eyes, and clothing. Protect your face, eyes, and clothing when working with a battery.
- Battery gases can explode. Keep cigarettes, sparks and flames away from the battery.
- Keep your body and hands away from pin hole leaks or nozzles that eject high pressure hydraulic fluid. Use cardboard or paper to find hydraulic leaks. Hydraulic fluid escaping under pressure can penetrate skin and cause injury requiring surgery within a few hours by a qualified surgeon or gangrene may result.

Slope Chart

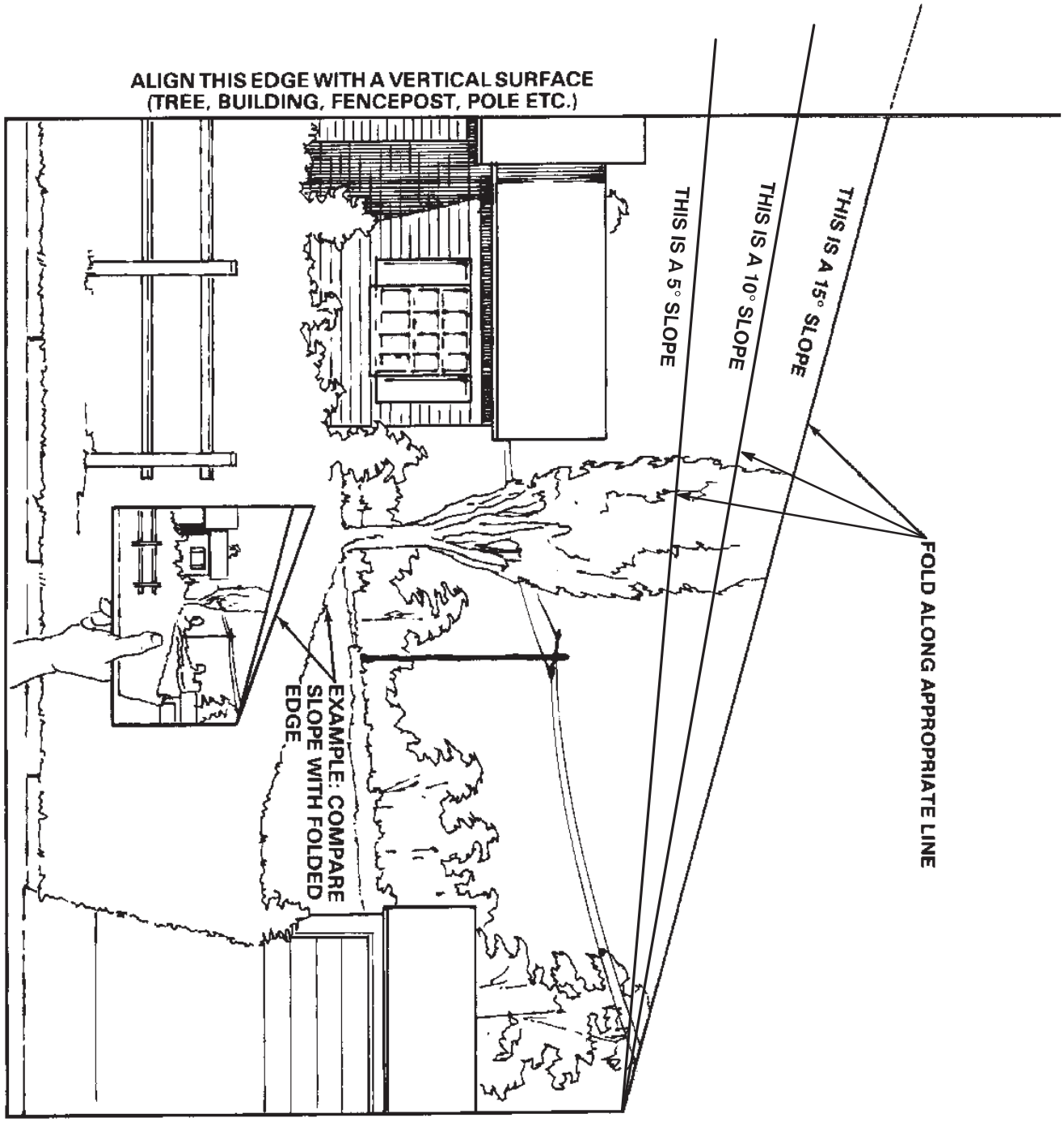
ALIGN THIS EDGE WITH A VERTICAL SURFACE
(TREE, BUILDING, FENCEPOST, POLE ETC.)
THIS IS A 5° SLOPE
THIS IS A 10° SLOPE
THIS IS A 15° SLOPE
FOLD ALONG APPROPRIATE LINE
EXAMPLE: COMPARE SLOPE WITH FOLDED EDGE

Safety and Instruction Decals

Safety decals and instructions are easily visible to the operator and are located near any area of potential danger. Replace any decal that is damaged or lost.

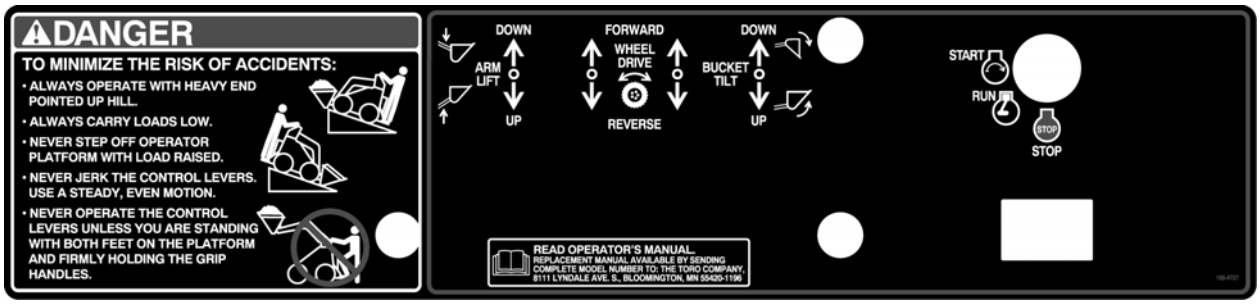

108-4727

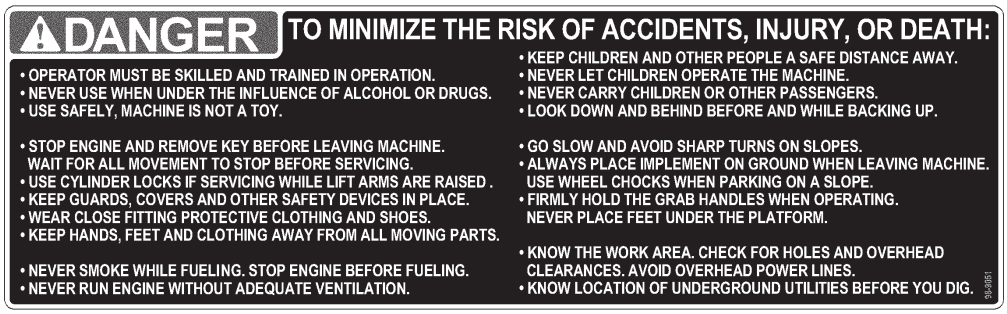

98-9051

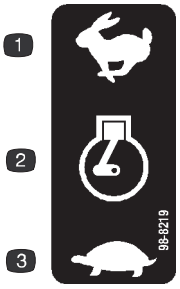

98-8219

1. Fast
2. Throttle
3. Slow



108-9716

1. Fast
2. Traction drive
3. Slow
4. Slow
5. Attachment speed
6. Fast



98-4682



100–9979

1. No fire, open flames, or smoking.
2. Wear eye protection
3. Keep bystanders a safe distance from the battery.
4. Caustic liquid/chemical burn hazard
5. Read the *Operator's Manual.*
6. Explosion hazard
7. Contains lead; do not discard.
8. Recycle
9. Wear eye protection; explosive gases can cause blindness and other injuries
10. No sparks, flame, or smoking
11. Sulfuric acid can cause blindness or severe burns.
12. Flush eyes immediately with water and get medical help fast.



98-4677

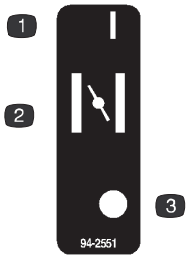

94-2551

1. On
2. Choke
3. Off



100-6141



105-8432

Setup

Note: Determine the left and right side of the machine from the normal operating position.

Loose Parts

Note: Use the chart below to verify that all parts have been shipped.

DESCRIPTION	QTY.	USE
Speed selector lever assembly	1	Install the speed selector lever
Key	2	Start engine
Hydraulic oil filter	1	Break-in oil change
Drain hose	1	Drain the engine oil

Installing the Valve Lever

1. Remove and discard the nut securing the bolt and washer to the speed selector lever.
2. Secure the lever to the speed selector valve using the bolt and washer as illustrated in Figure 2.

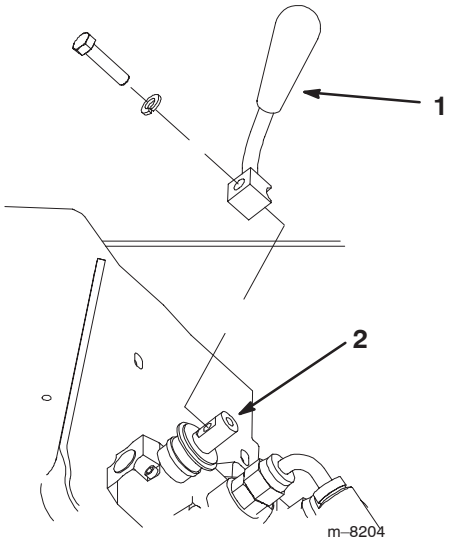

Figure 2

1. Speed selector lever
2. Speed selector valve

Charging the Battery

Warning

CALIFORNIA

Proposition 65 Warning

Battery posts, terminals, and related accessories contain lead and lead compounds, chemicals known to the State of California to cause cancer and reproductive harm. ***Wash hands after handling.***

Warning

Battery terminals or metal tools could short against metal components, causing sparks. Sparks can cause the battery gasses to explode, resulting in personal injury.

- **When removing or installing the battery, do not allow the battery terminals to touch any metal parts of the traction unit.**
- **Do not allow metal tools to short between the battery terminals and metal parts of the traction unit.**

1. Park the traction unit on a level surface, raise the loader arms, and install the cylinder locks; refer to Using the Cylinder Locks, page 17.
2. Stop the engine and remove the key.

3. Remove the hood; refer to Removing the Hood, page 22.

4. Connect a charger to the battery (Fig. 3) and charge it for a minimum of 1 hour at 6 to 10 amps.

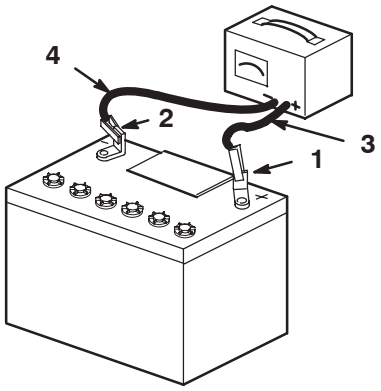

Figure 3

1. Positive Battery Post
2. Negative Battery Post
3. Red (+) Charger Lead
4. Black (–) Charger Lead

Warning

Charging the battery produces gasses that can explode.

Never smoke near the battery and keep sparks and flames away from it.

5. When the battery is fully charged, unplug the charger from the electrical outlet, then disconnect the charger leads from the battery posts (Fig. 3).

Specifications

Overall width	40.5 in. (103 cm)
Overall length	60.0 in. (152 cm)
Overall height	49.0 in. (125 cm)
Weight (without attachment)	1567 lb. (711 kg)
Rated operating capacity (with 200 lb. operator and std. bucket)	515 lb. (234 kg)
Tipping capacity (with 200 lb. operator and st. bucket)	l030 lb. (467 kg)
Wheelbase	28 in. (71 cm)
Dump height (with std. bucket)	47 in. (120 cm)
Reach—fully raised (with std. bucket)	26.0 in. (66 cm)
Height to hinge pin (std bucket in highest position)	66.0 in. (168 cm)
Engine	Kohler Command Pro, 674 cc, V-Twin

Specifications and design are subject to change without notice.

Attachments

Many attachments are available for use with the traction unit. These attachments allow you to perform many different functions with the traction unit such as hauling materials, digging holes, grading, and more. Contact your Toro dealer for a list of all approved attachments and accessories.

Important Use only Toro approved attachments.

Stability Data

The following table lists the maximum slope recommended for the traction unit in the positions listed in the table. Slopes over the listed degree may cause the traction unit to become unstable. The data in the table assumes that the loader arms are fully lowered and that the factory installed tires are on the traction unit, inflated to the recommended pressure; raised arms and other tire types or pressure may affect the stability.

Configuration	Maximum Recommended Slope when Operating with: Front Uphill 	Rear Uphill 	Side Uphill 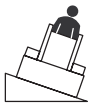
Traction unit without attachment	10°	20°	18°
Traction unit with counterweight, without attachment	8°	20°	19°
Traction unit with an attachment rated with one of the following stability ratings for each slope position:*			
A	25°	25°	20°
B	20°	20°	17°
C	15°	15°	13°
D	10°	10°	9°
E	5°	5°	5°

* In each attachment manual is a set of three stability ratings, one for each hill position. To determine the maximum slope you can traverse with the attachment installed, find the degree of slope that corresponds to the stabilities ratings of the attachment. Unless otherwise specified in the attachment manual, assume that the listed ratings are for use without the counterweight.

Example: If the attachment installed on the traction unit has a Front Uphill rating of B, a Rear Uphill rating of D, and a Side Uphill rating of C, then you could drive forward up a 20° slope, rearward up a 10° slope, or sideways on a 13° slope, as listed in the above table.

Before Operating

Before operating, check the fuel and oil level, remove debris from the traction unit, and check the tire pressure. Also, ensure that the area is clear of people and debris. You should also know and have marked the locations of all utility lines.

Adding Fuel

Danger

In certain conditions, gasoline is extremely flammable and highly explosive. A fire or explosion from gasoline can burn you and others and can damage property.

- **Fill the fuel tank outdoors, in an open area, when the engine is cold. Wipe up any gasoline that spills.**
- **Do not fill the fuel tank completely full. Add gasoline to the fuel tank until the level is 1/4 to 1/2 in. (6 to 13 mm) below the bottom of the filler neck. This empty space in the tank allows gasoline to expand.**
- **Never smoke when handling gasoline, and stay away from an open flame or where gasoline fumes may be ignited by a spark.**
- **Store gasoline in an approved container and keep it out of the reach of children. Never buy more than a 30-day supply of gasoline.**
- **Always place gasoline containers on the ground away from your vehicle before filling.**
- **Do not fill gasoline containers inside a vehicle or on a truck or trailer bed because interior carpets or plastic truck bed liners may insulate the container and slow the loss of any static charge.**
- **When practical, remove gas-powered equipment from the truck or trailer and refuel the equipment with its wheels on the ground.**
- **If this is not possible, then refuel such equipment on a truck or trailer from a portable container, rather than from a gasoline dispenser nozzle.**
- **If a gasoline dispenser nozzle must be used, keep the nozzle in contact with the rim of the fuel tank or container opening at all times until fueling is complete.**

Use unleaded regular gasoline (87 pump octane minimum). Leaded regular gasoline may be used if unleaded regular is not available.

Important Never use methanol, gasoline containing methanol, or gasohol containing more than 10% ethanol because the fuel system could be damaged. Do not mix oil with gasoline.

Important Never use fuel additives containing methanol or ethanol.

Note: The two fuel tanks will run empty equally; however, you must fill them separately because filling one will not fill the other.

Filling the Fuel Tanks

1. Park the traction unit on a level surface, lower the loader arms, and stop the engine.
2. Remove the key and allow the engine to cool.
3. Clean around the fuel tank caps and remove them.
4. Use a funnel and add unleaded regular gasoline to each fuel tank, until the level is 1/4 to 1/2 in. (6 mm to 13 mm) below the bottom of each filler neck.

Important This space in the tank allows gasoline to expand. Do not fill the fuel tank completely full.

5. Install the fuel tank caps securely. Wipe up any gasoline that may have spilled.

Using Stabilizer/Conditioner

Use a fuel stabilizer/conditioner in the machine to provide the following benefits:

- Keeps gasoline fresh during storage of 90 days or less. For longer storage, drain the fuel tank.
- Cleans the engine while it runs
- Eliminates gum-like varnish buildup in the fuel system, which causes hard starting

Important Do not use fuel additives containing methanol or ethanol.

Add the correct amount of gas stabilizer/conditioner to the gas.

Note: A fuel stabilizer/conditioner is most effective when mixed with fresh gasoline. To minimize the chance of varnish deposits in the fuel system, use fuel stabilizer at all times.

Checking the Oil Level

1. Park the traction unit on a level surface, lower the loader arms, and stop the engine.
2. Remove the key and allow the engine to cool.
3. Clean around the oil dipstick (Fig. 4).
4. Pull out the dipstick and wipe the metal end clean (Fig. 4).
5. Slide the dipstick fully into the dipstick tube (Fig. 4).

6. Pull the dipstick out and look at the metal end.
7. If the oil level is low, clean around the oil filler cap and remove the cap (Fig. 4).
8. Slowly pour only enough oil into the valve cover to raise the level to the F (full) mark.

Important Do not overfill the crankcase with oil because the engine may be damaged.

9. Replace the filler cap and dipstick.

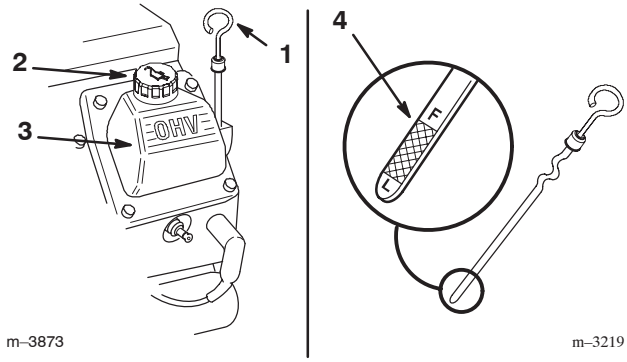

Figure 4

1. Oil dipstick
2. Filler cap
3. Valve cover
4. Metal end

Removing Debris from the Traction Unit

Important Operating the engine with a blocked grass screen, dirty or plugged cooling fins, and/or cooling shrouds removed, will result in engine damage from overheating.

1. Park the traction unit on a level surface, raise the loader arms, and install the cylinder locks; refer to Using the Cylinder Locks, page 17.
2. Stop the engine and remove the key.
3. Remove the hood; refer to Removing the Hood, page 22.
4. Clean any debris from the grill before each use and/or during use, if required.
5. Wipe away debris from the air cleaner before each use and/or during use, if required.
6. Clean any debris build-up on the engine with a brush or blower before each use.

Important It is preferable to blow dirt out, rather than washing it out. If water is used, keep it away from electrical items and hydraulic valves. Do not use a high-pressure washer. High-pressure washing can damage the electrical system and hydraulic valves or deplete grease.

7. Install the hood; refer to Installing the Hood, page 22.
8. Remove and store the cylinder locks (refer to Using the Cylinder Locks, page 17), and lower the loader arms.

Checking the Hydraulic Fluid

Check the hydraulic fluid level before the engine is first started and after every 25 operating hours.

Hydraulic Tank Capacity: 17.25 gal. (67 l)

Hydraulic Fluid: 10W-30 or 15W-40 detergent, diesel engine oil (API service CH-4 or higher).

1. Remove the attachment, if one is installed; refer to Removing an Attachment, page 19.
2. Park the traction unit on a level surface, raise the loader arms, and install the cylinder locks; refer to Using the Cylinder Locks, page 17.
3. Stop the engine and remove the key.
4. Remove the hood; refer to Removing the Hood, page 22.
5. Clean the area around the filler neck of the hydraulic tank (Fig. 5).
6. Remove the cap from the filler neck and check the fluid level on the dipstick (Fig. 5).

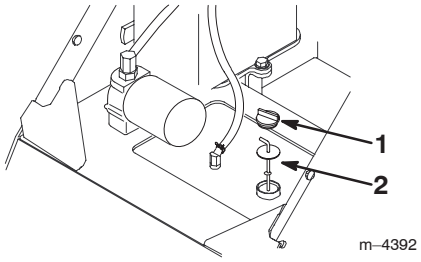

Figure 5

1. Filler neck cap
2. Dipstick

7. If the level is low, add enough fluid to raise it to the proper level.
8. Install the cap on the filler neck.
9. Install the hood; refer to Installing the Hood, page 22.
10. Remove and store the cylinder locks (refer to Using the Cylinder Locks, page 17) and lower the loader arms.

Tire pressure

Maintain the air pressure in the tires as specified. Check the tires when they are cold to get the most accurate reading.

Pressure: 15-20 psi.

Note: Use a lower tire pressure (15 psi.) when operating in sandy soil conditions to provide better traction in the loose soil.

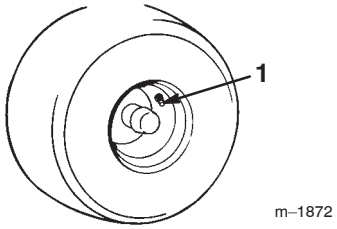

Figure 6

1. Valve stem

Operation

Note: Determine the left and right side of the machine from the normal operating position.

Traction Unit Overview

Figure 7 contains a front and back view of the traction unit. Familiarize yourself with all of the traction unit components listed in Figure 7.

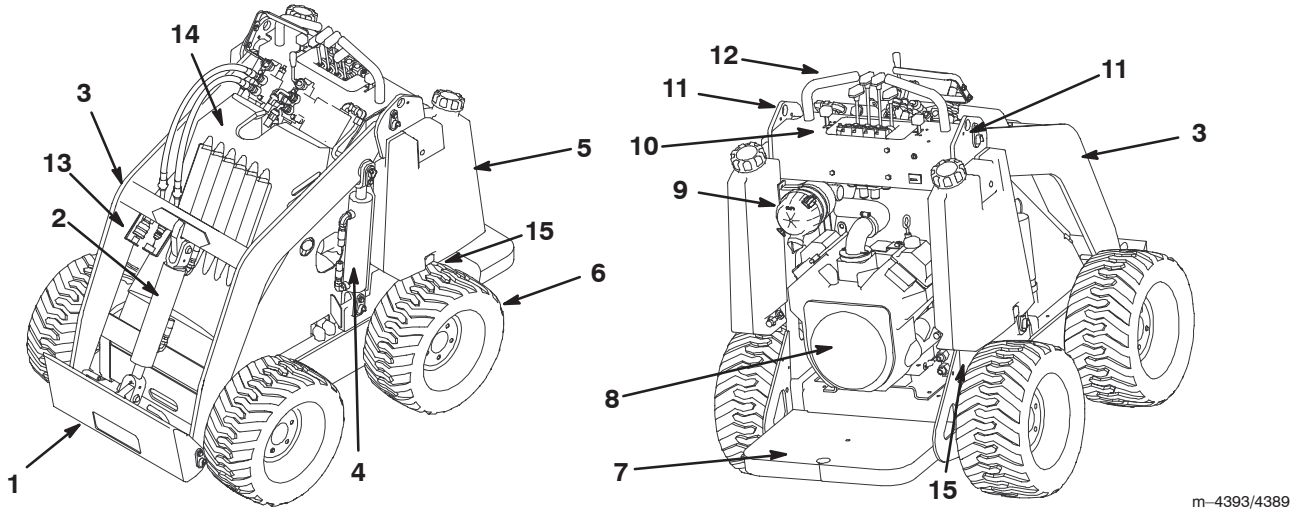

Figure 7

1. Mount plate
2. Tilt cylinder
3. Loader arms
4. Lift cylinder
5. Fuel tank
6. Wheel
7. Operator platform
8. Engine
9. Air filter
10. Control panel
11. Lift points
12. Handle
13. Auxiliary hydraulic couplers
14. Hood
15. Tow valve

Caution

You could fall off of the platform and be seriously injured during operation.

Do not move the control levers unless you are standing with both feet on the platform and your hands are holding the handles.

Controls

Become familiar with all the controls (Fig. 8) before you start the engine and operate the traction unit.

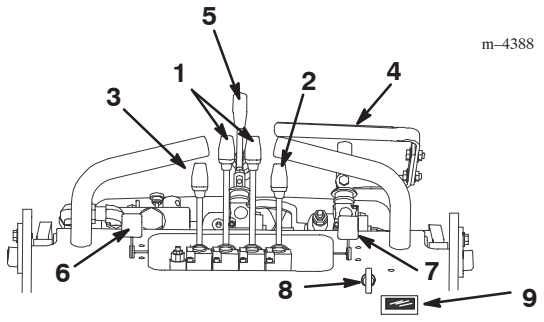

Figure 8

1. Traction control levers
2. Attachment tilt lever
3. Loader arm lever
4. Auxiliary hydraulics lever
5. Speed selector lever
6. Throttle lever
7. Choke lever
8. Key switch
9. Hour meter/tachometer

Key Switch

The key switch, used to start and stop the engine, has three positions: off, run, and start.

To start the engine, rotate the key to the start position. Release the key when engine starts and it will move automatically to the run position.

To stop the engine, rotate the key to the off position.

Throttle Lever

Move the control forward to increase the engine speed and rearward to decrease speed.

Choke Lever

Before starting a cold engine, move the choke lever fully forward. After the engine starts, regulate the choke to keep the engine running smoothly. As soon as possible, move the choke lever rearward as far as possible. A warm engine requires little or no choking.

Traction Control Levers

To move forward, move the traction control levers forward. To move rearward, move the traction control levers rearward.

To go straight, move both traction control levers equally.

To turn, move the lever located on the side you want to turn back toward the neutral position while keeping the other lever engaged.

The farther you move the traction control levers in either direction, the faster the traction unit will move in that direction.

To slow or stop, move the traction control levers to neutral.

Attachment Tilt Lever

To tilt the attachment forward, slowly push the attachment tilt lever forward.

To tilt the attachment rearward, slowly pull the attachment tilt lever rearward.

Loader Arm Lever

To lower the loader arms, slowly push the loader arm lever forward.

To raise the loader arms, slowly pull the loader arm lever rearward.

Auxiliary Hydraulics Lever

To operate a hydraulic attachment in forward direction, slowly pull the auxiliary hydraulics lever rearward.

To operate a hydraulic attachment in reverse direction, slowly push the auxiliary hydraulics lever forward. This is also called the detent position because it does not require operator presence.

Speed Selector Lever

Move the speed selector lever to the forward position to set the traction drive, loader arms, and attachment tilt to high speed and the auxiliary hydraulics to low speed.

Move the speed selector lever to the rearward position to set the auxiliary hydraulics to high speed and the traction drive, loader arms, and attachment tilt to low speed.

Warning

If you move the speed selector lever while the traction unit is in motion, the traction unit will either stop suddenly or accelerate quickly. If you operate the traction unit with the speed selector lever in an intermediate position, the traction unit will operate erratically and may be damaged. You could lose control of the traction unit and injure bystanders or yourself.

- **Do not move the speed selector lever when the traction unit is in motion.**
- **Do not operate the traction unit when the speed selector is in any intermediate position (i.e., any position other than fully forward or fully rearward).**

Hour Meter/Tachometer

When the engine is off, the hour meter/tachometer displays the number of hours of operation that have been logged on the traction unit. When the engine is running, it displays the speed of the engine in revolutions per minute (rpm).

After 50 hours and then every 100 hours thereafter (that is at 150, 250, 350, etc.) the screen displays CHG OIL to remind you to change the oil. After every 100 hours, the screen displays SVC to remind you to perform the other maintenance procedures based on a 100, 200, or 400 hour schedule. These reminders come on starting three hours prior to the service interval time and flash at regular intervals for six hours.

Starting and Stopping the Engine

Starting the Engine

1. Stand on the platform.
2. Move the auxiliary hydraulics valve lever to neutral.
3. Move the throttle lever midway between slow (turtle) and fast (rabbit) positions.
4. Move the choke lever fully forward before starting a cold engine.

Note: A warm or hot engine may not require choking.

5. Turn the ignition key to the start position. When the engines starts, release the key.

Important Do not engage the starter for more than 10 seconds at a time. If the engine fails to start, allow a 30 second cool-down period between attempts. Failure to follow these instructions can burn out the starter motor.

6. After the engine starts, gradually move the choke rearward. If the engine stalls or hesitates, move the choke forward again until the engine warms up.
7. Move the throttle lever to the desired setting.

Important If you run the engine at high speeds when the hydraulic system is cold (i.e., when the ambient air temperature is around freezing or lower), hydraulic system damage could occur. When starting the engine in cold conditions, allow the engine to run in the middle throttle position for 2 to 5 minutes before moving the throttle to fast (rabbit).

Stopping the Engine

1. Move the throttle lever to the slow (turtle) position.
2. Lower the loader arms to the ground.
3. Turn the ignition key off.

Note: If the engine has been working hard or is hot, let it idle for a minute before turning the ignition key off. This helps cool the engine before it is stopped. In an emergency, the engine may be stopped immediately.

Driving Forward or Backward

The throttle control regulates the engine speed as measured in rpm (revolutions per minute). Place the throttle lever in the fast (rabbit) position for best performance.

Note: You can adjust the throttle position to operate at slower speeds.

To drive the traction unit, complete the following actions as necessary:

- To move forward, move the traction control levers forward.
- To move rearward, move the traction control levers rearward.
- To go straight, move both traction control levers equally.
- To turn, move the lever located on the side you want to turn toward the neutral position while keeping the other lever engaged.
- To slow or stop, move the traction control levers to neutral.

Note: The farther you move the traction control levers in either direction, the faster the traction unit will move in that direction.

Stopping the Traction Unit

To stop the traction unit, move the traction control levers to neutral and the throttle lever to slow (turtle), lower loader arms to the ground, and turn the ignition key off to stop the engine. Remove the key.

Caution

A child or untrained bystander could attempt to operate the traction unit and be injured.

Remove the key from the switch when leaving the traction unit, even if just for a few seconds.

Moving a Non-functioning Traction Unit

Important Do not tow or pull the traction unit without first opening the tow valves, or the hydraulic system will be damaged.

1. Stop the engine.
2. Remove the plug covering each tow valve (Fig. 9).

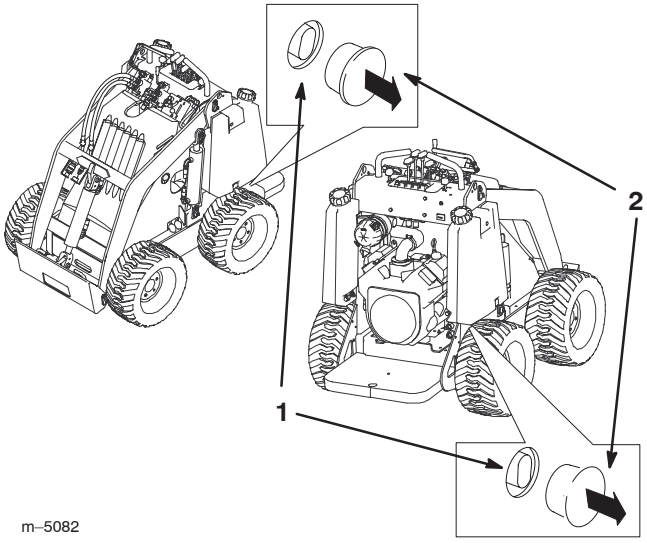

Figure 9

1. Tow valve
2. Plug

3. Loosen the jam nut on each tow valve (Fig. 9).
4. Turn the valves counter-clockwise one turn with a hex wrench to open them.
5. Tow the traction unit as required.

Important Do not exceed 3 mph when towing.

6. When the traction unit has been repaired, close the tow valves and tighten the jam nuts.

Important Do not overtighten the tow valves.

7. Replace the plugs.

Using the Cylinder Locks

Warning

The loader arms may lower when in the raised position crushing anyone under them.

Install the cylinder locks before performing maintenance that requires raised loader arms.

Installing the Cylinder Locks

1. Start the engine.
2. Raise the loader arms to the fully raised position.
3. Stop the engine.
4. Position a loader arm cylinder lock over each lift cylinder rod (Fig. 10).
5. Secure each loader arm cylinder lock with a clevis pin and cotter pin (Fig. 10).

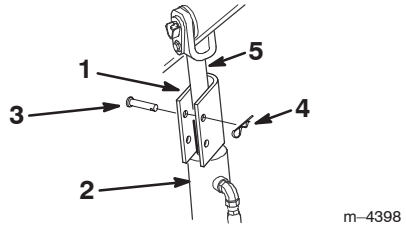

Figure 10

1. Cylinder lock
2. Lift cylinder
3. Hairpin cotter
4. Clevis pin
5. Lift cylinder rod

6. With the engine off, lower the loader arms.

Removing/Storing the Cylinder Locks

1. Start the engine.
2. Raise the loader arms to the fully raised position.
3. Stop the engine.
4. Remove the clevis pin and cotter pin securing each cylinder lock.
5. Remove the cylinder locks.

6. Lower the loader arms.

7. Install the cylinder locks over the hydraulic hoses and secure them with the clevis pins and cotter pins (Fig. 11).

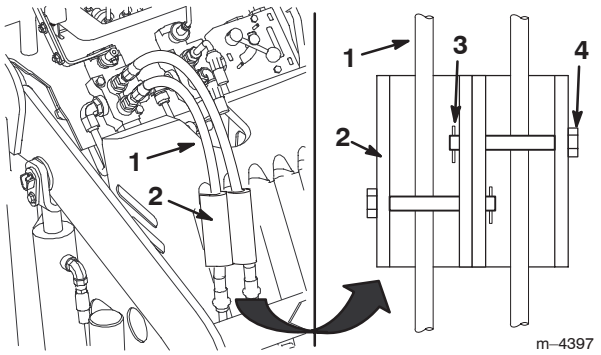

Figure 11

1. Hydraulic hoses
2. Cylinder locks
3. Hairpin cotter
4. Clevis pin

Installing and Removing Attachments

Connecting an Attachment

Important Use only Toro-approved attachments. Attachments can change the stability and the operating characteristics of the traction unit. The warranty of the traction unit may be voided if used with unapproved attachments.

Important Before installing the attachment, ensure that the mount plates are free of any dirt or debris and that the pins rotate freely. If the pins do not rotate freely, grease them; refer to Greasing the Traction Unit, page 22.

1. Position the attachment on a level surface with enough space behind it to accommodate the traction unit.
2. Start the engine.
3. Tilt the attachment mount plate forward.
4. Position mount plate into the upper lip of the attachment receiver plate (Fig. 12).

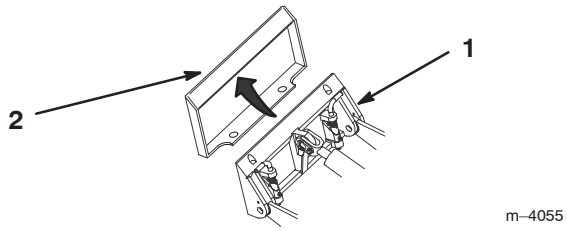

Figure 12

1. Mount plate
2. Receiver plate

5. Raise the loader arms while tilting back the mount plate at the same time.

Important The attachment should be raised enough to clear the ground, and the mount plate should be tilted all the way back.

6. Stop the engine.
7. Engage the quick attach pins, ensuring that they are fully seated in the mount plate (Fig. 13).

Important If the pins do not rotate to the engaged position, the mount plate is not fully aligned with the holes in the attachment receiver plate. Check the receiver plate and clean it if necessary.

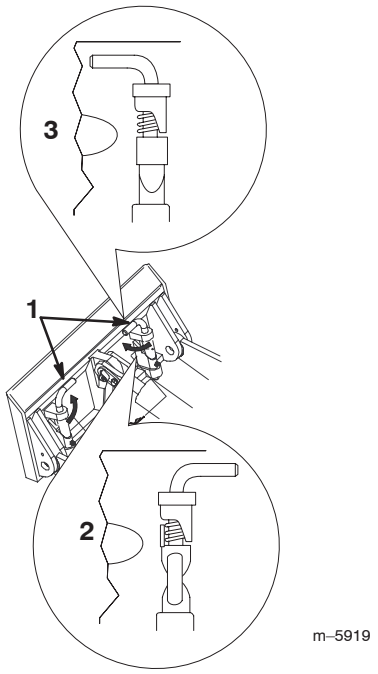

Figure 13

1. Quick attach pins (shown in engaged position)
2. Disengaged position
3. Engaged position

Warning

If you do not fully seat the quick attach pins through the attachment mount plate, the attachment could fall off of the traction unit, crushing you or bystanders.

Ensure that your quick attach pins are fully seated in the attachment mount plate.

Connecting the Hydraulic Hoses

If the attachment requires hydraulics for operation, connect the hydraulic hoses as follows:

1. Stop the engine.
2. Move the auxiliary hydraulics lever forward, backward, and back to neutral to relieve pressure at the hydraulic couplers.
3. Push the auxiliary hydraulics lever forward into the detent position.
4. Remove the protective covers from the hydraulic couplers on the traction unit.
5. Ensure that all foreign matter is cleaned from the hydraulic connectors.
6. Push the attachment male connector into the female connector on the traction unit.

Note: When you connect the attachment male connector first, you will relieve any pressure build up in the attachment.

Warning

Hydraulic fluid escaping under pressure can penetrate skin and cause injury. Fluid injected into the skin must be surgically removed within a few hours by a doctor familiar with this form of injury or gangrene may result.

- **Keep your body and hands away from pin hole leaks or nozzles that eject high pressure hydraulic fluid.**
- **Use cardboard or paper to find hydraulic leaks, never use your hands.**

Caution

Hydraulic couplers, hydraulic lines/valves, and hydraulic fluid may be hot. If you contact hot components you may be burned.

- **Wear gloves when operating the hydraulic couplers.**
- **Allow the traction unit to cool before touching hydraulic components.**
- **Do not touch hydraulic fluid spills.**

7. Push the attachment female connector into the male connector on the traction unit.
8. Confirm that the connection is secure by pulling on the hoses.
9. Move the auxiliary hydraulics lever to neutral.

Removing an Attachment

1. Lower the attachment to the ground
2. Stop the engine.
3. Disengage the quick attach pins by turning them to the outside.
4. If the attachment uses hydraulics, move the auxiliary hydraulics lever forward, backward, and back to neutral to relieve pressure at the hydraulic couplers.
5. If the attachment uses hydraulics, slide the collar back on the hydraulic couplers and disconnect them.

Important Connect the attachment hoses together to prevent hydraulic system contamination during storage.

6. Install the protective covers onto the hydraulic couplers on the traction unit.
7. Start the engine, tilt the mount plate forward, and back the traction unit away from the attachment.

Securing the Traction Unit for Transport

When transporting the traction unit on a trailer, always use the following procedure:

Important Do not operate or drive the traction unit on roadways.

1. Lower the loader arms.
2. Stop the engine.
3. Secure the traction unit to the trailer with chains or straps using the operator platform support openings to secure the rear of the traction unit and the loader arms/mount plate to secure the front of the traction unit.

Adjusting the Thigh Support

To adjust the thigh support (Fig. 14), loosen the knobs and raise or lower the support pad to the desired height. You can also obtain additional adjustment by loosening the nuts securing the pad to the adjustment plate, moving the plate up or down as needed. Tighten all fasteners securely when finished.

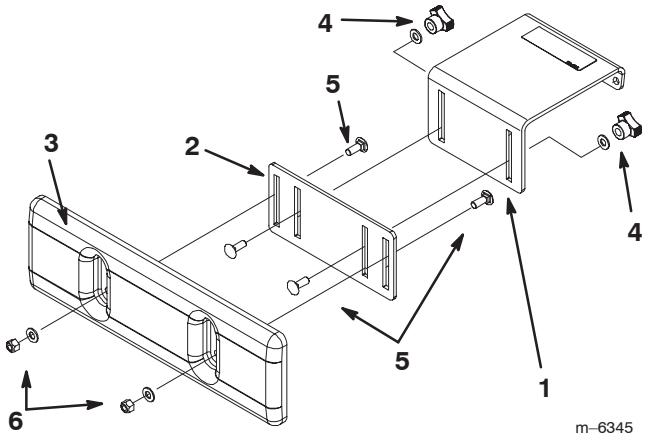

Figure 14

1. Thigh support bracket
2. Adjustment plate
3. Thigh support pad
4. Knob and flat washer
5. Carriage bolt
6. Locknut and flat washer

Maintenance

Note: Determine the left and right side of the machine from the normal operating position.

Recommended Maintenance Schedule

Maintenance Service Interval	Maintenance Procedure
After the first 8 hours	• Change the hydraulic filter • Torque the wheel lugnuts to 50 ft-lb (68 N·m)
After the first 50 hours	• Change engine oil and filter
8 hours	• Grease the traction unit • Check engine oil level • Check for loose fasteners • Check tire pressure (20 psi.)
25 hours	• Check hydraulic oil level • Inspect hydraulic lines for leaks
100 hours	• Change engine oil and filter[1] • Torque the wheel lugnuts to 50 ft-lb (68 N·m) • Check battery cable connections
200 hours	• Check engine speed (1400 rpm idle and 3600 full throttle, ± 75) • Check spark plugs • Replace primary air filter[1]
400 hours	• Change hydraulic filter[1, 3] • Inspect fuel lines for leaks
Yearly/Storage	• Change hydraulic oil[1, 4] • Replace secondary air filter[1] • Replace the fuel filter[1] • Touch up chipped paint

[1]More often in dusty, dirty conditions.
[2]For severe duty or rental applications, change every 100 operating hours.
[3]For severe duty or rental applications, change every 200 operating hours.
[4]For severe duty or rental applications, change every 400 operating hours.

Important Refer to your engine operator's manual for additional maintenance procedures.

Note: After 50 hours and then every 100 hours thereafter (that is at 150, 250, 350, etc.) the screen displays CHG OIL to remind you to change the oil. After every 100 hours, the screen displays SVC to remind you to perform the other maintenance procedures based on a 100, 200, or 400 hour schedule. These reminders come on starting three hours prior to the service interval time and flash at regular intervals for six hours.

Caution

If you leave the key in the ignition switch, someone could accidently start the engine and seriously injure you or other bystanders.

Remove the key from the ignition and disconnect the wires from the spark plugs before you do any maintenance. Set the wire aside so that it does not accidentally contact the spark plug.

Removing/Installing the Hood

Removing the Hood

Before performing many maintenance procedures, you will need to remove the hood.

1. Raise the loader arms and install the cylinder locks; refer to Using the Cylinder Locks, page 17.

Note: In the case that you need to remove the hood without raising the loader arms, be very careful not to damage the hood or hydraulic hoses as you maneuver the hood out from under the arms.

2. Stop the engine and remove the key.
3. Release the four locking tabs (Fig. 15).

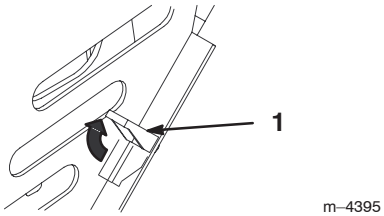

Figure 15

1. Locking tabs

4. Pull the hood off of the traction unit.

Installing the Hood

1. Position the hood over the traction unit frame with the posts on the hood fitting into the holes on the frame (Fig. 15).
2. Secure the hood by pushing the locking tabs forward and down (Fig. 15).

Greasing the Traction Unit

Grease all pivot joints every 8 operating hours and immediately after every washing.

Grease Type: General-purpose grease.

1. Lower the loader arms and stop the engine. Remove the key.
2. Clean the grease fittings with a rag.
3. Connect a grease gun to each fitting (Fig. 16 and 17).

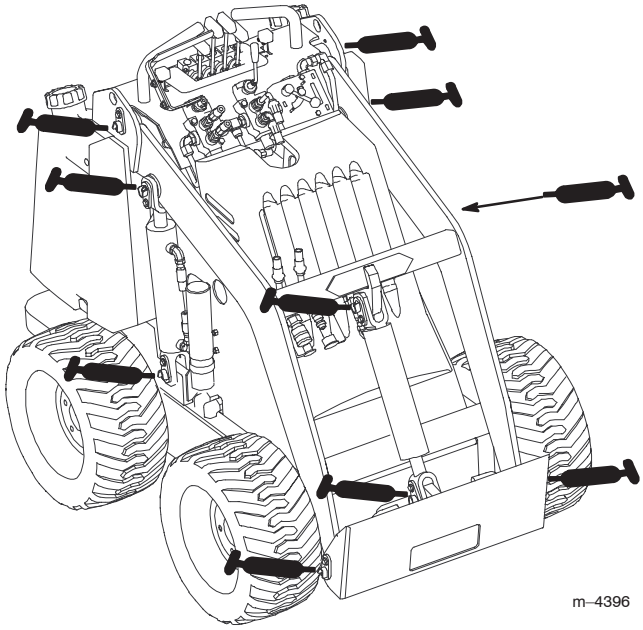

Figure 16

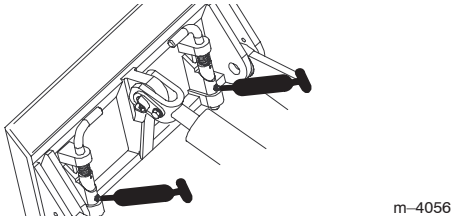

Figure 17

4. Pump grease into the fittings until grease begins to ooze out of the bearings (approximately 3 pumps).
5. Wipe up any excess grease.

Servicing the Air Cleaner

Replace the primary filter every 200 operating hours. Replace the secondary filter yearly.

Note: Replace the filters more frequently if operating conditions are extremely dusty or sandy.

Important Do not clean the filters. Cleaning them may damage them, allowing contaminants into the engine.

Removing the Filter

1. Lower the loader arms and stop the engine. Remove the key.
2. Release the latches on the air cleaner and pull the air cleaner cover off of the air cleaner body (Fig. 18).
3. Clean the inside of the air cleaner cover with compressed air.

4. Remove the rubber outlet on the cover and clean it and the port it covers thoroughly.

5. Replace the rubber outlet.

6. Gently slide the primary filter out of the air cleaner body and discard it (Fig. 18). Avoid knocking the filter into the side of the body.

7. If you are also replacing the safety filter, gently slide it out of the air cleaner body and discard it (Fig. 18). Avoid knocking the filter into the side of the body.

Important Never clean the paper element with pressurized air or liquids, such as solvent, gas, or kerosene. Cleaning it may damage it, allowing contaminants into the engine. Replace the paper element if it is dirty or damaged (i.e., after approximately 100 operating hours).

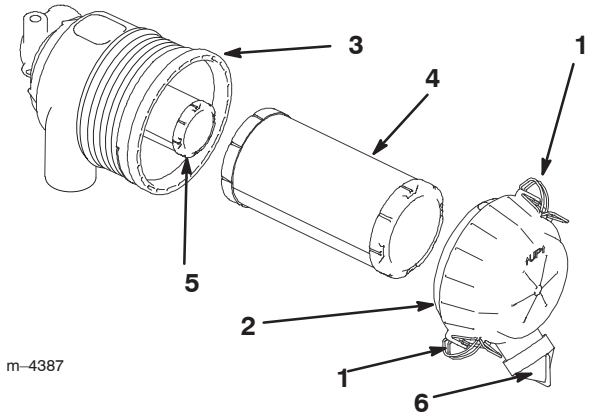

Figure 18

1. Latches
2. Air cleaner cover
3. Air filter body
4. Primary filter
5. Safety filter
6. Rubber outlet

Installing the Filters

1. Check each filter for shipping damage, especially to the sealing end.

Important Do not use a damaged filter.

2. If the safety filter is being replaced, carefully slide it into the filter body (Fig. 18). Ensure that it is fully seated by pushing on the outer rim of the filter while installing it.

3. Carefully slide the primary filter over the safety filter (Fig. 18). Ensure that it is fully seated by pushing on the outer rim of the filter while installing it.

Important Do not press on the soft inside area of the filter.

4. Install the air cleaner cover with the rubber outlet pointing down in a 5:00 to 7:00 orientation (viewed from the end) (Fig. 18) and secure it with the latches.

Servicing the Engine Oil

Change oil and filter after the first 50 operating hours and then every 100 operating hours thereafter.

Note: Change oil more frequently when operating conditions are extremely dusty or sandy.

Oil Type: Detergent oil (API service SH, SJ, SL, or higher)

Crankcase Capacity: w/filter, 2.1 qt. (2 l)

Viscosity: See table below

USE THESE SAE VISCOSITY OILS

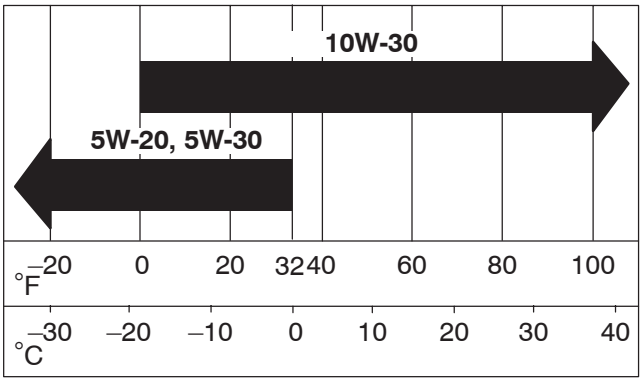

Changing the Oil

1. Start the engine and let it run for five minutes. This warms the oil so it drains better.

2. Park the traction unit so that the drain side is slightly lower than the opposite side to ensure that the oil drains completely.

3. Lower the loader arms, chock the wheels, and stop the engine. Remove the key.

Caution

Components will be hot if the traction unit has been running. If you touch hot components you may be burned.

Allow the traction unit to cool before performing maintenance or touching components under the hood.

4. Place one end of a hose on the drain valve and the other end in a pan.

5. Open the drain valve by turning it counterclockwise, pulling out as you turn it (Fig. 19).

6. When the oil has drained completely, close the drain valve and remove the hose.

Note: Dispose of the used oil at a certified recycling center.

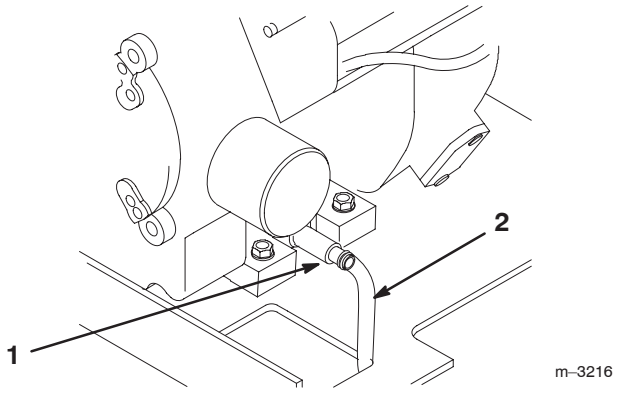

Figure 19

1. Oil drain valve
2. Drain hose

7. Remove the old filter and wipe the filter adapter (Fig. 20) gasket surface.

8. Pour new oil of the proper type in through the center hole of the filter. Stop pouring when the oil reaches the bottom of the threads.

9. Allow a minute or two for the oil to be absorbed by filter material, then pour off the excess oil.

10. Apply a thin coat of new oil to the rubber gasket on the replacement filter (Fig. 20).

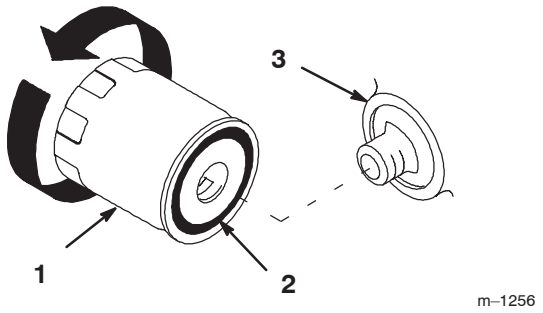

Figure 20

1. Oil filter
2. Gasket
3. Adapter

11. Install the replacement oil filter to the filter adapter. Turn the oil filter clockwise until the rubber gasket contacts the filter adapter, then tighten the filter an additional 1/2 turn (Fig. 20).

12. Remove the oil fill cap and slowly pour approximately 80% of the specified amount of oil in through the valve cover.

13. Check the oil level; refer to Checking the Oil Level, page 12.

14. Slowly add additional oil to bring the level to the F (full) mark on the dipstick.

15. Replace the fill cap.

Replacing the Battery

When the battery no longer holds a charge, replace it.

Important Use only a genuine Toro replacement battery.

Warning

CALIFORNIA

Proposition 65 Warning

Battery posts, terminals, and related accessories contain lead and lead compounds, chemicals known to the State of California to cause cancer and reproductive harm. ***Wash hands after handling.***

1. Park the traction unit on a level surface, raise the loader arms, and install the cylinder locks; refer to Using the Cylinder Locks, page 17.

2. Stop the engine and remove the key.

3. Remove the hood; refer to Removing the Hood, page 22.

4. Remove the wing nuts and bar securing the battery (Fig. 21).

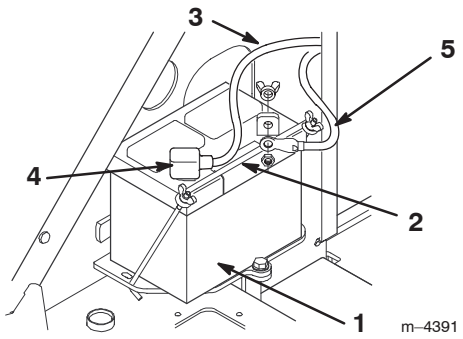

Figure 21

1. Battery
2. Bar
3. Positive cable
4. Rubber cover
5. Negative cable

Warning

Battery terminals or metal tools could short against metal components, causing sparks. Sparks can cause the battery gasses to explode, resulting in personal injury.

- **When removing or installing the battery, do not allow the battery terminals to touch any metal parts of the traction unit.**
- **Do not allow metal tools to short between the battery terminals and metal parts of the traction unit.**

5. Disconnect the negative (black) battery cable from the battery, saving the bolt and wing nut.
6. Disconnect the positive (red) battery cable from the battery, saving the bolt and wing nut.
7. Gently push the hydraulic hoses aside and lift the battery out of the chassis.
8. Activate the new battery as directed on the battery labeling.
9. Install the battery into the chassis (Fig. NO TAG).
10. Secure the battery in the chassis (Fig. NO TAG).
11. Using the bolt and wing nut supplied with the battery, connect the positive (red) cable to the positive (+) battery post (Fig. NO TAG). Slide the rubber cover over the battery post.

Warning

Incorrect battery cable routing could damage the traction unit and cables, causing sparks. Sparks can cause the battery gasses to explode, resulting in personal injury.

- **Always *disconnect* the negative (black) battery cable before disconnecting the positive (red) cable.**
- **Always *connect* the positive (red) battery cable before connecting the negative (black) cable.**

12. Using the bolt and wing nut supplied with the battery, connect the negative (black) cable to the negative (–) battery post (Fig. NO TAG).

Note: Ensure that the battery cables do not contact any sharp edges or each other.

13. Install the hood.

Important Follow the new battery maintenance procedures as directed on the battery labeling.

Servicing the Spark Plugs

Check the spark plugs after every 200 operating hours. Ensure that the air gap between the center and side electrodes is correct before installing each spark plug. Use a spark plug wrench for removing and installing the spark plugs and a gapping tool/feeler gauge to check and adjust the air gap. Install new spark plugs if necessary.

Type: Champion Premium Gold 2071 or Champion RC12YC (or equivalent) Air Gap: 0.030 in. (0.76 mm)

Removing the Spark Plugs

1. Lower the loader arms and stop the engine. Remove the key.
2. Pull the wires off of the spark plugs (Fig. 22).
3. Clean around the spark plugs.
4. Remove the spark plugs and metal washers.

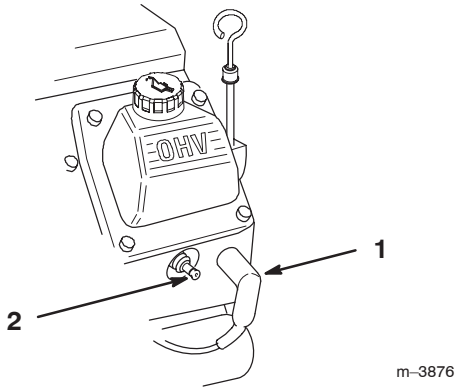

Figure 22

1. Spark plug wire
2. Spark plug

Checking the Spark Plugs

1. Look at the center of the spark plugs (Fig. 23). If you see light brown or gray on the insulator, the engine is operating properly. A black coating on the insulator usually means the air cleaner is dirty.

Important Never clean the spark plugs. Always replace the spark plugs when they have a black coating, worn electrodes, an oily film, or cracks.

2. Check the gap between the center and side electrodes (Fig. 23).

3. Bend the side electrode (Fig. 23) if the gap is not correct.

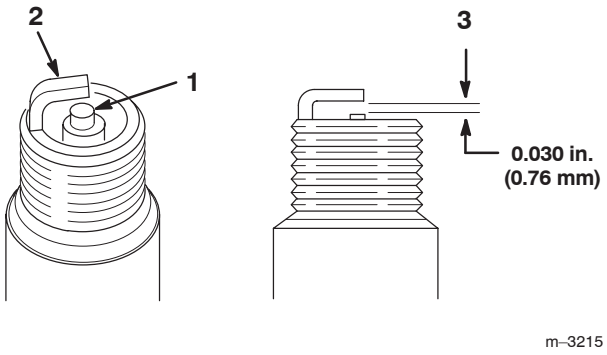

Figure 23

1. Center electrode insulator
2. Side electrode
3. Air gap (not to scale)

Installing the Spark Plugs

1. Thread the spark plugs into the spark plug holes.
2. Tighten the spark plugs to 20 ft.-lb (27 N.m).
3. Push the wires onto the spark plugs (Fig. 22).

Servicing the Hydraulic System

Replacing the Hydraulic Filter

Change the hydraulic filter:

- After the first 8 to 10 operating hours.
- After every 400 operating hours.

1. Position traction unit on a level surface.
2. Raise the loader arms and install the cylinder locks; refer to Using the Cylinder Locks, page 17.
3. Stop the engine and remove the key.
4. Remove the hood, refer to Removing the Hood, page 22.

Important Do not substitute an automotive oil filter or severe hydraulic system damage may result.

5. Place a drain pan under the filter.
6. Remove the old filter and wipe the filter adapter, gasket surface clean.
7. Apply a thin coat hydraulic fluid to the rubber gasket on the replacement filter (Fig. 24).
8. Install the replacement hydraulic filter onto the filter adapter. Tighten it clockwise until the rubber gasket contacts the filter adapter, then tighten the filter an additional 1/2 turn (Fig. 24).
9. Clean up any spilled fluid.
10. Start the engine and let it run for about two minutes to purge air from the system.
11. Stop the engine and check for leaks.
12. Check the fluid level in the hydraulic tank (refer to Checking the Hydraulic Fluid, page 13) and add fluid to raise the level to mark on dipstick. Do not over fill the tank.

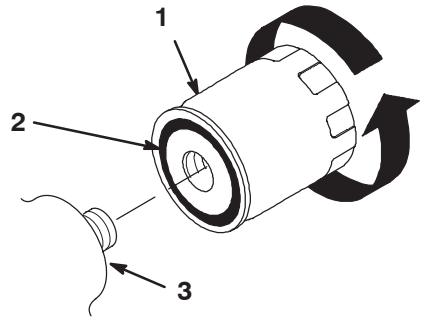

Figure 24

1. Hydraulic filter
2. Gasket
3. Adapter

13. Install the hood; refer to Installing the Hood, page 22.
14. Remove and store the cylinder locks (refer to Using the Cylinder Locks, page 17) and lower the loader arms.

Changing the Hydraulic Fluid

Change the hydraulic fluid yearly.

1. Position traction unit on a level surface.
2. Raise the loader arms and install the cylinder locks; refer to Using the Cylinder Locks, page 17.
3. Stop the engine and remove the key.
4. Remove the hood; refer to Removing the Hood, page 22.
5. Place a large drain pan under the traction unit that can hold at least 17 gal. (67 l).
6. Remove the drain plug from the bottom of the hydraulic tank and allow the fluid to completely drain out.
7. Install the drain plug.

8. Fill the hydraulic tank with approximately 15 gal. 10W-30 or 15W-40 detergent, diesel engine oil (API service CH-4 or higher) (refer to Checking Hydraulic Fluid, page 13).

Important Do not substitute automotive transmission fluid or severe hydraulic system damage may result.

Note: Dispose of used oil at a certified recycling center.

9. Install the hood; refer to Installing the Hood, page 22.

10. Remove and store the cylinder locks (refer to Using the Cylinder Locks, page 17) and lower the loader arms.

Checking Hydraulic Lines

After every 25 operating hours, check the hydraulic lines and hoses for leaks, loose fittings, kinked lines, loose mounting supports, wear, weather, and chemical deterioration. Replace all moving hydraulic hoses every 1500 hours or 2 years, which ever comes first. Make necessary repairs before operating.

Warning

Hydraulic fluid escaping under pressure can penetrate skin and cause injury. Fluid injected into the skin must be surgically removed within a few hours by a doctor familiar with this form of injury or gangrene may result.

- **Keep your body and hands away from pin hole leaks or nozzles that eject high pressure hydraulic fluid.**
- **Use cardboard or paper to find hydraulic leaks, never use your hands.**

Replacing the Fuel Filter

Replace the fuel filter yearly. Never install a dirty filter.

1. Lower the loader arms and stop the engine. Remove the key.
2. Shut off the fuel valve on the bottom of each fuel tank (Fig. 26).
3. Clamp the fuel line between the fuel tanks and the fuel filter to block the fuel flow.
4. Squeeze the ends of the hose clamps together and slide them away from the filter (Fig. 25).
5. Place a drain pan under the fuel lines to catch any leaks, then remove the filter from the fuel lines.
6. Install a new filter and move the hose clamps close to the filter.
7. Remove the clamp blocking fuel flow and open the fuel valves.

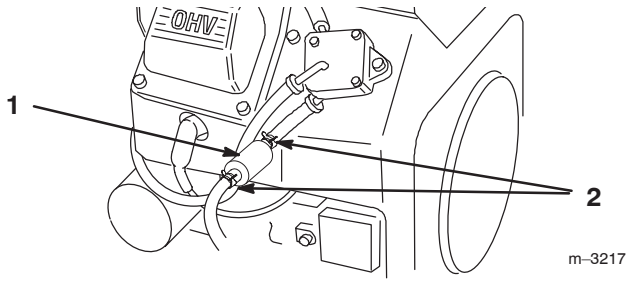

Figure 25

1. Filter
2. Hose clamp

Draining the Fuel Tanks

Danger

In certain conditions, gasoline is extremely flammable and highly explosive. A fire or explosion from gasoline can burn you and others and can damage property.

- **Drain gasoline from the fuel tank when the engine is cold. Do this outdoors in an open area. Wipe up any gasoline that spills.**
- **Never smoke when draining gasoline, and stay away from an open flame or where a spark may ignite the gasoline fumes.**

1. Park the traction unit on a level surface, to ensure that the fuel tanks drain completely.
2. Lower the loader arms and stop the engine. Remove the key.
3. Shut off the fuel valve in the hose near the bottom of each fuel tank as illustrated in Figure 26.

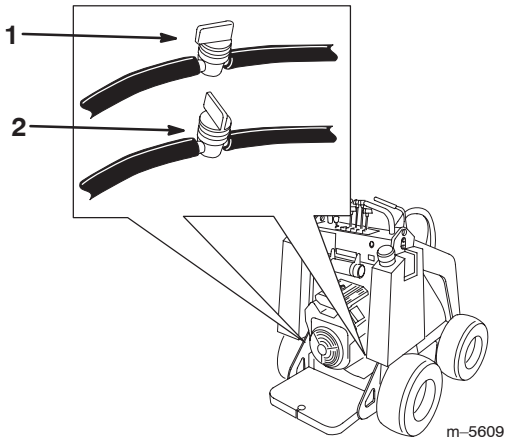

Figure 26

1. Fuel valve, open 2. Fuel valve closed

4. Loosen the hose clamp at the fuel filter and slide it up the fuel line away from the filter.
5. Pull the fuel line off of the fuel filter, open the fuel valves, and allow the gasoline to drain into a gas can or drain pan.

Note: Now is the best time to install a new fuel filter because the fuel tanks are empty.

6. Install the fuel line onto the fuel filter.
7. Slide the hose clamp close to the fuel filter to secure the fuel line.
8. Open the fuel valve in the hose near the bottom of each fuel tank as illustrated in Figure 26.

Cleaning and Storage

1. Lower the loader arms and stop the engine. Remove the key.
2. Remove dirt and grime from the external parts of the entire traction unit, especially the engine. Clean dirt and chaff from the outside of the engine's cylinder head fins and blower housing.

Important You can wash the traction unit with mild detergent and water. Do not pressure wash the traction unit. Avoid excessive use of water, especially near the control panel, engine, hydraulic pumps, and motors.

3. Service the air cleaner; refer to Servicing the Air Cleaner, page 22.
4. Grease the traction unit; refer to Greasing the Traction Unit, page 22.
5. Change the crankcase oil; refer to Servicing the Engine Oil, page 23.
6. Remove the spark plugs and check the condition of each; refer to Servicing the Spark Plugs, page 25.
7. With the spark plugs removed from the engine, pour two tablespoons of engine oil into each spark plug hole.
8. Place rags over the spark plug holes to catch any oil spray, then use the starter to crank the engine and distribute the oil inside the cylinder.
9. Install the spark plugs, but do not install the wires on the spark plugs.
10. Check the tire pressure; refer to Tire Pressure, page 14.
11. Charge the battery; refer to the Setup section.
12. For storage over 30 days, prepare the traction unit as follows.

    A. Add a petroleum based stabilizer/conditioner to fuel in the tank. Follow mixing instructions from stabilizer manufacturer (1 oz. per gal.). **Do not use an alcohol based stabilizer (ethanol or methanol).**

Note: A fuel stabilizer/conditioner is most effective when mixed with fresh gasoline and used at all times.

    B. Run the engine to distribute conditioned fuel through the fuel system (5 minutes).
    C. Stop the engine, allow it to cool, and drain the fuel tanks; refer to Draining Fuel Tanks, page 27.
    D. Start the engine and run it until it stops.
    E. Choke the engine.
    F. Start and run the engine until it will not start again.
    G. Dispose of fuel properly. Recycle as per local codes.

Important Do not store stabilizer/conditioned gasoline over 90 days.

13. Check and tighten all bolts, nuts, and screws. Repair or replace any part that is damaged or defective.
14. Paint all scratched or bare metal surfaces. Paint is available from your Authorized Service Dealer.
15. Store the traction unit in a clean, dry garage or storage area. Remove the key from the ignition switch and keep it in a memorable place.
16. Cover the traction unit to protect it and keep it clean.

Important When **removing the traction unit from storage**, charge the battery; refer to the Setup section.

Troubleshooting

Problem	Possible Causes	Corrective Action
Starter does not crank	1. Auxiliary hydraulics lever is not in neutral position. 2. Battery is dead. 3. Electrical connections are corroded or loose. 4. Relay or switch is defective.	1. Move lever to neutral position. 2. Charge the battery. 3. Check electrical connections for good contact. 4. Contact Authorized Service Dealer.
Engine will not start, starts hard, or fails to keep running.	1. Fuel tanks are empty. 2. Choke is not on. 3. The fuel valves are closed. 4. Air cleaner is dirty. 5. Spark plug wires are loose or disconnected. 6. Spark plugs are pitted, fouled, or gap is incorrect. 7. Dirt in fuel filter. 8. Dirt, water, or stale fuel is in fuel system.	1. Fill fuel tanks with gasoline. 2. Move choke lever fully forward. 3. Open the fuel valves. 4. Replace the air cleaner element. 5. Install wires on spark plugs. 6. Install new, correctly gapped spark plugs. 7. Replace fuel filter. 8. Contact Authorized Service Dealer.
Engine loses power.	1. Engine load is excessive. 2. Air cleaner is dirty. 3. Oil level in crankcase is low. 4. Cooling fins and air passages under engine blower housing are plugged. 5. Spark plugs are pitted, fouled, or gap is incorrect. 6. Dirt in fuel filter. 7. Dirt, water, or stale fuel is in fuel system.	1. Reduce ground speed. 2. Replace the air cleaner element. 3. Add oil to crankcase. 4. Remove obstruction from cooling fins and air passages. 5. Install new, correctly gapped spark plugs. 6. Replace fuel filter. 7. Contact Authorized Service Dealer.
Engine overheats.	1. Engine load is excessive. 2. Oil level in crankcase is low. 3. Cooling fins and air passages under engine blower housing are plugged.	1. Reduce ground speed. 2. Add oil to crankcase. 3. Remove obstruction from cooling fins and air passages.
Abnormal vibration.	1. Engine mounting bolts are loose.	1. Tighten engine mounting bolts.

Problem	Possible Causes	Corrective Action
Traction unit does not drive.	1. Tow-valves are open. 2. Hydro fluid level low. 3. Traction pump drive coupler is loose or broken. 4. Pump and/or wheel motor is defective or damaged. 5. Control valve is defective or damaged. 6. Relief valve is defective or damaged.	1. Close the tow-valves. 2. Add hydro fluid to reservoir. 3. Contact Service Dealer. 4. Contact Service Dealer. 5. Contact Service Dealer. 6. Contact Service Dealer.
When at rest, loader arms creep downward more than 3 inches per hour (less than 3 inches an hour is normal for this traction unit).	1. Valve spool leakage	1. Contact Service Dealer.
When at rest, loader arms settle downward 2 inches quickly and then stop.	1. Cylinder seals are leaking	1. Replace seals.

Schematics

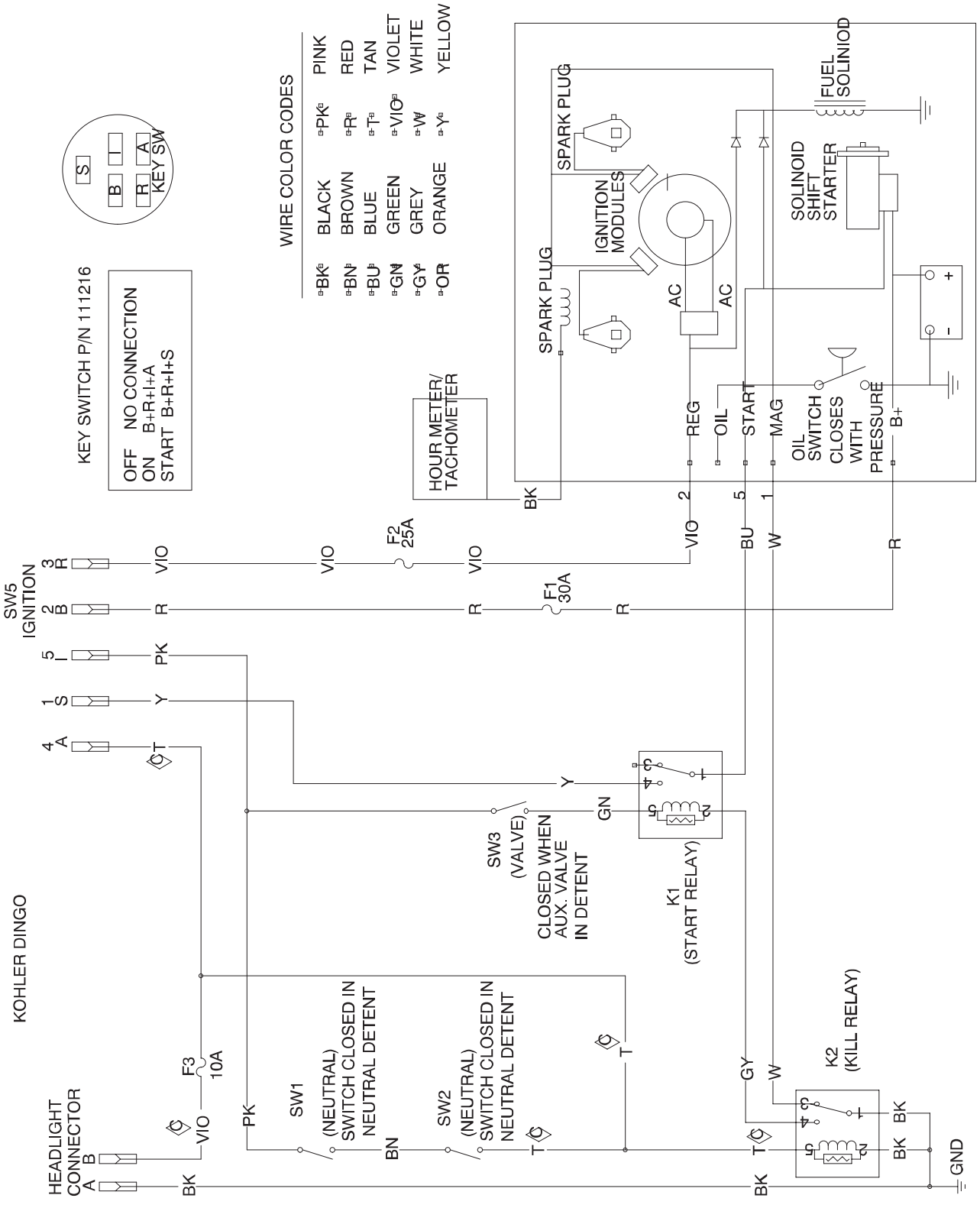

Electrical Schematic

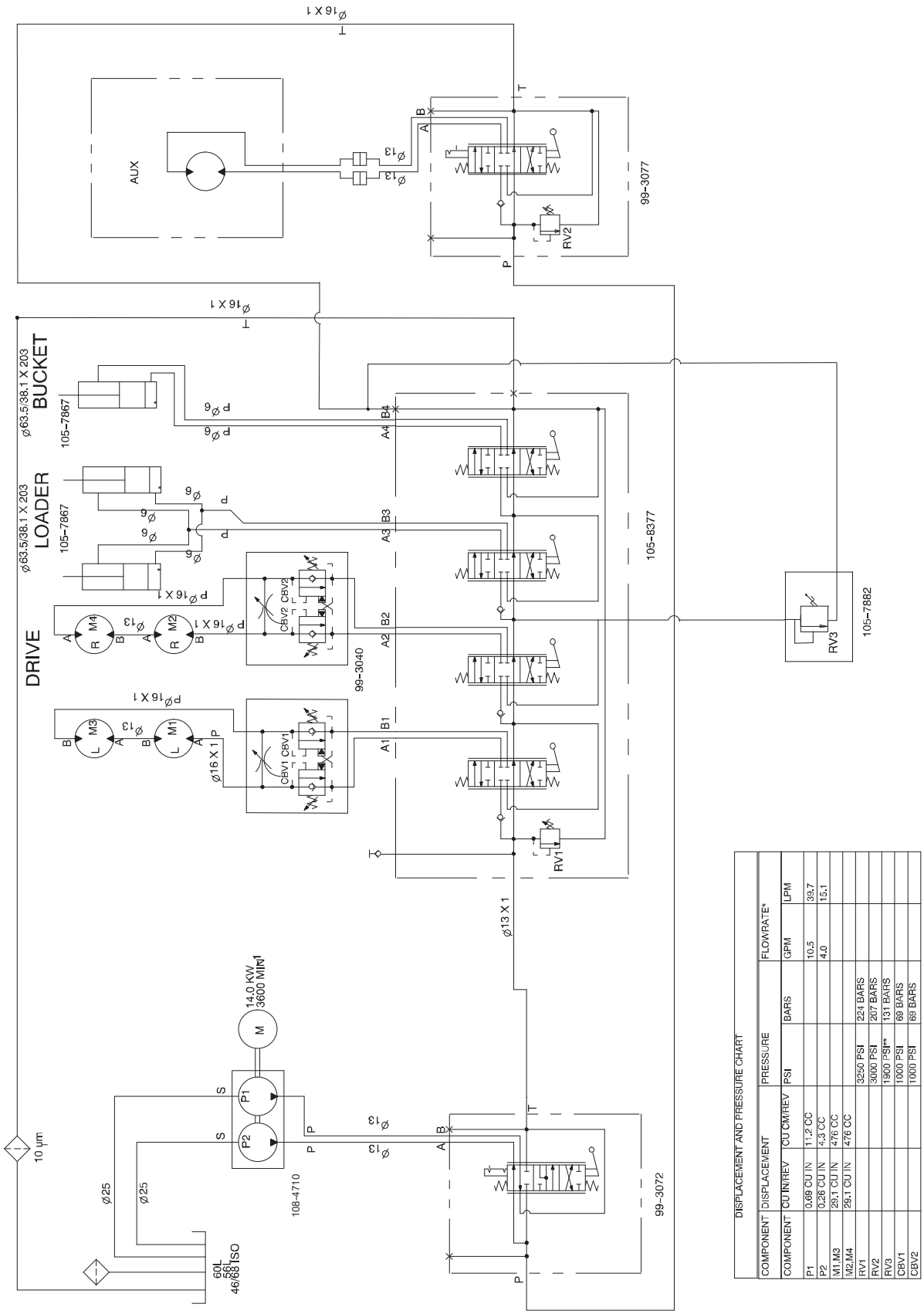

DISPLACEMENT AND PRESSURE CHART

COMPONENT	DISPLACEMENT		PRESSURE		FLOWRATE*	
COMPONENT	CU IN/REV	CU CM/REV	PSI	BARS	GPM	LPM
P1	0.69 CU IN	11.2 CC			10.5	39.7
P2	0.26 CU IN	4.3 CC			4.0	15.1
M1,M3	29.1 CU IN	476 CC				
M2,M4	29.1 CU IN	476 CC				
RV1			3250 PSI	224 BARS		
RV2			3000 PSI	207 BARS		
RV3			1900 PSI**	131 BARS		
CBV1			1000 PSI	69 BARS		
CBV2			1000 PSI	69 BARS		

* FLOWRATE CALCULATED AT 3600 RPM AND 98% EFFICIENCY.
** CRACKING PRESSURE. FULL FLOW (-8 GPM) RELIEF PRESSURE APPROX. 2100 PSI.

Hydraulic Schematic

Evaporative Emission Control Warranty Statement

California Evaporative Emission Control Warranty Statement
Your Warranty Rights and Obligations

Introduction

The California Air Resources Board and The Toro® Company are pleased to explain the evaporative emission control system's warranty on your 2006 model year equipment. In California, new equipment that use small off–road engines must be designed, built, and equipped to meet the State's stringent anti–smog standards. The Toro) Company must warrant the evaporative emission control system on your equipment for two years provided there has been no abuse, neglect or improper maintenance of your equipment.
Your evaporative emission control system may include parts such as: fuel lines, fuel line fittings, and clamps.

Manufacturer's Warranty Coverage:

This evaporative emission control system is warranted for two years. If any evaporative emission–related part on your equipment is defective, the part will be repaired or replaced by The Toro® Company.

Owner's Warranty Responsibilities:

- As the equipment owner, you are responsible for performance of the required maintenance listed in your Operator's Manual. The Toro® Company recommends that you retain all receipts covering maintenance on your equipment, but The Toro® Company cannot deny warranty solely for the lack of receipts.
- As the equipment owner, you should however be aware that The Toro® Company may deny you warranty coverage if your emission warranty parts have failed due to abuse, neglect, or improper maintenance or unapproved modifications.
- You are responsible for presenting your equipment to an Authorized Service Dealer as soon as the problem exists. The warranty repairs should be completed in a reasonable amount of time, not to exceed 30 days. If you have a question regarding your warranty coverage, you should contact The Toro® Company at 1–952–948–4027 or call us toll free at the number listed in your Toro Warranty statement.

Defects Warranty Requirements:

17. The warranty period begins on the date the engine or equipment is delivered to an ultimate purchaser.

18. General Evaporative Emissions Warranty Coverage. The emission warranty parts must be warranted to the ultimate purchaser and any subsequent owner that the evaporative emission control system when installed was

    A. Designed, built, and equipped so as to conform with all applicable regulations; and

    B. Free from defects in materials and workmanship that causes the failure of a warranted part for a period of two years.

19. The warranty on evaporative emissions–related parts will be interpreted as follows:

    A. Any warranted part that is not scheduled for replacement as required maintenance in the written instructions must be warranted for the warranty period of two years. If any such part fails during the period of warranty coverage, it must be repaired or replaced by The Toro® Company. Any such part repaired or replaced under the warranty must be warranted for a time not less than the remaining warranty period.

    B. Any warranted part that is scheduled only for regular inspection in the written instructions must be warranted for the warranty period of two years. A statement in such written instructions to the effect of "repair or replace as necessary" will not reduce the period of warranty coverage. Any such part repaired or replaced under warranty must be warranted for a time not less than the remaining warranty period.

    C. Any warranted part that is scheduled for replacement as required maintenance in the written instructions must be warranted for the period of time prior to the first scheduled replacement point for that part. If the part fails prior to the first scheduled replacement, the part must be repaired or replaced by The Toro® Company. Any such part repaired or replaced under warranty must be warranted for a time not less than the remainder of the period prior to the first scheduled replacement point for the part.

    D. Repair or replacement of any warranted part under the warranty provisions of this article must be performed at no charge to the owner at an Authorized Service Dealer.

    E. Notwithstanding the provisions of subsection (D) above, warranty services or repairs must be provided at an Authorized Service Dealer.

    F. The owner must not be charged for diagnostic labor that leads to the determination that a warranted part is in fact defective, provided that such diagnostic work is performed at an Authorized Service Dealer.

    G. Throughout the evaporative emission control system's two year warranty period, The Toro® Company must maintain a supply of warranted parts sufficient to meet the expected demand for such parts.

    H. Manufacturer approved replacement parts must be used in the performance of any warranty maintenance or repairs and must be provided without charge to the owner. Such use will not reduce the warranty obligations of The Toro® Company.

    I. The use of any add–on or modified parts will be grounds for disallowing a warranty claim made in accordance with this article. The Toro® Company will not be liable under this Article to warrant failures of warranted parts caused by the use of an add–on or modified part.

    J. The Toro® Company shall provide any documents that describe the warranty procedures or policies within five working days of request by the Air Resources Board.

Emission Warranty Parts List:

The following list includes the parts covered under this warranty:

- Fuel Lines
- Fuel Line Fittings
- Clamps

The Toro Dingo Product Line Warranty

A One-Year Limited Warranty

Conditions and Products Covered

The Toro Company and its affiliate, Toro Warranty Company, pursuant to an agreement between them, jointly warrant your Toro Dingo Product ("Product") to be free from defects in materials or workmanship. The following time periods apply from the date the Product is delivered to the original retail purchaser:

Products	Warranty Period
• All traction units and attachments	1 year or 1000 operational hours, whichever occurs first
• All engines	2 years

Where a warrantable condition exists, we will repair the Product at no cost to you including diagnosis, labor, and parts.

Instructions for Obtaining Warranty Service

If you think that your Toro Product contains a defect in materials or workmanship, follow this procedure:

1. Contact any Authorized Dingo Service Dealer to arrange service at their dealership. To locate a dealer convenient to you, access our website at www.Toro.com. U.S. Customers may also call 800-348-2424.
2. Bring the product and your proof of purchase (sales receipt) to the Service Dealer.

If for any reason you are dissatisfied with the Service Dealer's analysis or with the assistance provided, contact us at:

LCB Customer Service Department
Toro Warranty Company
8111 Lyndale Avenue South
Bloomington, MN 55420-1196
888-577-7466 (U.S. customers)
877-484-9255 (Canada customers)

Owner Responsibilities

You must maintain your Toro Product by following the maintenance procedures described in the operator's manual. Such routine maintenance, whether performed by a dealer or by you, is at your expense. Parts scheduled for replacement as required maintenance ("Maintenance Parts"), are warranted for the period of time up to the scheduled replacement time for that part. Failure to perform required maintenance and adjustments can be grounds for disallowing a warranty claim.

Items and Conditions Not Covered

Not all product failures or malfunctions that occur during the warranty period are defects in materials or workmanship. This express warranty does not cover the following:

- Product failures which result from the use of non-Toro replacement parts, or from installation and use of add-on, modified, or unapproved accessories
- Product failures which result from failure to perform required maintenance and/or adjustments
- Product failures which result from operating the Product in an abusive, negligent or reckless manner
- Parts subject to consumption through use unless found to be defective. Examples of parts which are consumed, or used up, during normal Product operation include, but are not limited to, digging teeth, tines, spark plugs, tires, tracks, filters, chains, etc.
- Failures caused by outside influence. Items considered to be outside influence include, but are not limited to, weather, storage practices, contamination, use of unapproved coolants, lubricants, additives, or chemicals, etc.
- Normal "wear and tear" items. Normal "wear and tear" includes, but is not limited to, worn painted surfaces, scratched decals or windows, etc.
- Any component covered by a separate manufacturer's warranty
- Pickup and delivery charges

General Conditions

Repair by an Authorized Toro Service Dealer is your sole remedy under this warranty.

Neither The Toro Company nor Toro Warranty Company is liable for indirect, incidental or consequential damages in connection with the use of the Toro Products covered by this warranty, including any cost or expense of providing substitute equipment or service during reasonable periods of malfunction or non-use pending completion of repairs under this warranty.

Some states do not allow exclusions of incidental or consequential damages, or limitations on how long an implied warranty lasts, so the above exclusions and limitations may not apply to you.

This warranty gives you specific legal rights, and you may also have other rights which vary from state to state.

Except for the Emissions warranty referenced below, if applicable, there is no other express warranty. All implied warranties of merchantability and fitness for use are limited to the duration of this express warranty.

Note to California residents: The Emissions Control System on your Product may be covered by a separate warranty meeting requirements established by the U.S. Environmental Protection Agency (EPA) or the California Air Resources Board (CARB). The hour limitations set forth above do not apply to the Emissions Control System Warranty. Refer to the California Emission Control Warranty Statement printed in you operator's manual or contained in the engine manufacturer's documentation for details.

Countries Other than the United States or Canada

Customers who have purchased Toro products exported from the United States or Canada should contact their Toro Distributor (Dealer) to obtain guarantee policies for your country, province, or state. If for any reason you are dissatisfied with your Distributor's service or have difficulty obtaining guarantee information, contact the Toro importer. If all other remedies fail, you may contact us at Toro Warranty Company.

Part No. 374-0047 Rev. –