FORM NO. 3313-601

TORO®

MODEL NO. 38080 — 9000001 & UP

PARTS CATALOG

824 SNOWTHROWER

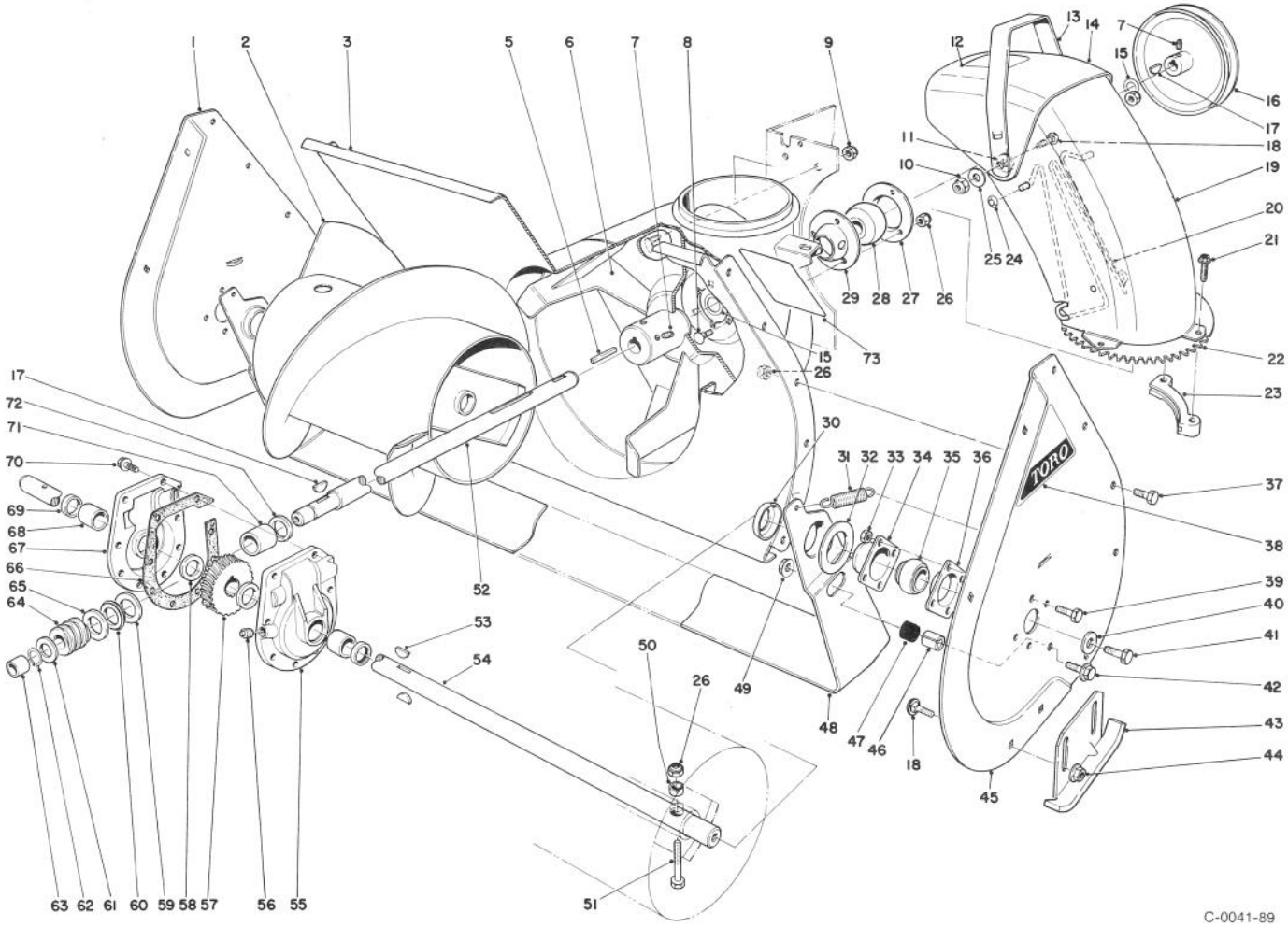

AUGER ASSEMBLY

Ref. No.	Part No.	Description	No. Used
1	43-7440	Sideplate Auger Right	1
2	26-6140	Auger Right	1
*	26-6150	Auger Left	1
3	40-8120	Auger Housing	1
5	6-8590	Key - Impeller	1
6	20-1260	Impeller	1
7	3242-4	Set Screw	4
8	3230-1	Carriage Bolt	3
9	3296-39	Locknut	4
10	32152-2	Nut - Lock	2
11	20-4320	Washer Rubber	2
12	63-3760	Decal - Discharge	1
13	20-1410	Handle Deflector	1

Ref. No.	Part No.	Description	No. Used
14	11-9379	Deflector Chute (Incl. Ref. #12)	1
15	3-0737	Thrust Washer	2
16	20-1310	Pulley Impeller	1
17	3257-23	Woodruff Key	2
18	3231-27	Carriage Bolt	6
19	56-2450	Chute	1
20	54-9770	Wire Chute	1
21	27-0210	Special Screw	4
22	43-7470	Swivel Gear Chute	1
23	40-8150	Retainer Chute	2
24	3290-326	Pushnuts	2
25	3290-340	Washer Belleville	2
26	3296-29	Locknut	15

*Not Illustrated

©The Toro Company — 1988

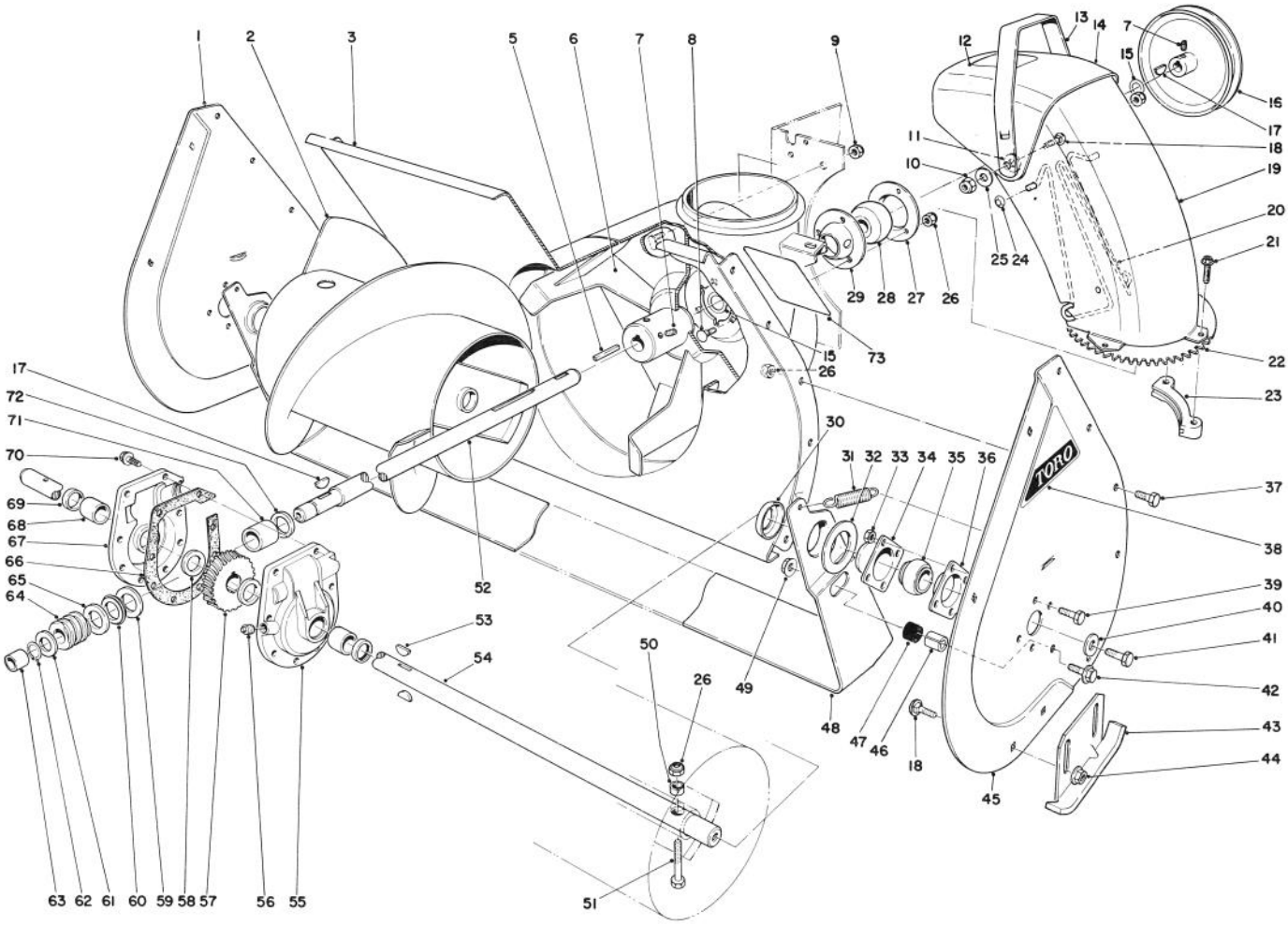

C-0041-89

AUGER ASSEMBLY (Continued)

Ref. No.	Part No.	Description	No. Used
27		Bearing Flange Rear	1
28	63-3450	Bearing Impeller	1
29		Bearing Flange Front	1
30	26-6400	Positioner – Scraper Blade	2
31	5-7290	Spring – Scraper Blade	2
32	20-0300	Spacer – Scraper Blade	2
33	32152-4	Locknut	8
34	20-0990	Bearing Flange Auger	2
35	20-0980	Bearing Auger	2
36	20-1000	Bearing Flange Auger	2
37	322-2	Capscrew	10
38	17-6500	Decal – Auger Side Plate	2
39	321-3	Capscrew	8
40	3-0750	Flat Washer	2
41	323-6	Capscrew	2
42	3234-11	Hex Flange Bolt	2
43	20-2840	Skid – Auger	2
44	3290-357	Flange Nut	4
45	43-7430	Sideplate Auger Left	1
46	25-5140	Standoff – Scraper Blade	2
47	25-5150	Bumper – Scraper Blade	2

Ref. No.	Part No.	Description	No. Used
48	20-1320	Scraper Blade	1
49	32128-21	Locknut	2
50	25-5090	Spacer Auger Hub	2
51	17-7030	Bolt Auger	2
52	36-2580	Shaft Impeller	1
53	3257-33	Key Woodruff	2
54	20-1170	Shaft Auger	1
55	37-8860	Gear Case (Incl. Ref. #68 & 69)	1
56	281-1	Pipe Plug	1
57	5-7180	Gear Worm	1
58	252-71	Thrust Bearing	2
59	252-78	Thrust Washer	1
60	252-76	Thrust Bearing	1
61	3-8664	Thrust Washer	1
62	32120-72	Retaining Ring	1
63	256-32	Bushing	1
64	5-7170	Worm	1
65	252-77	Thrust Washer	1
66	51-0460	Gasket	1
67	37-8850	Gear Case (Incl. Ref. #68 & 69)	1

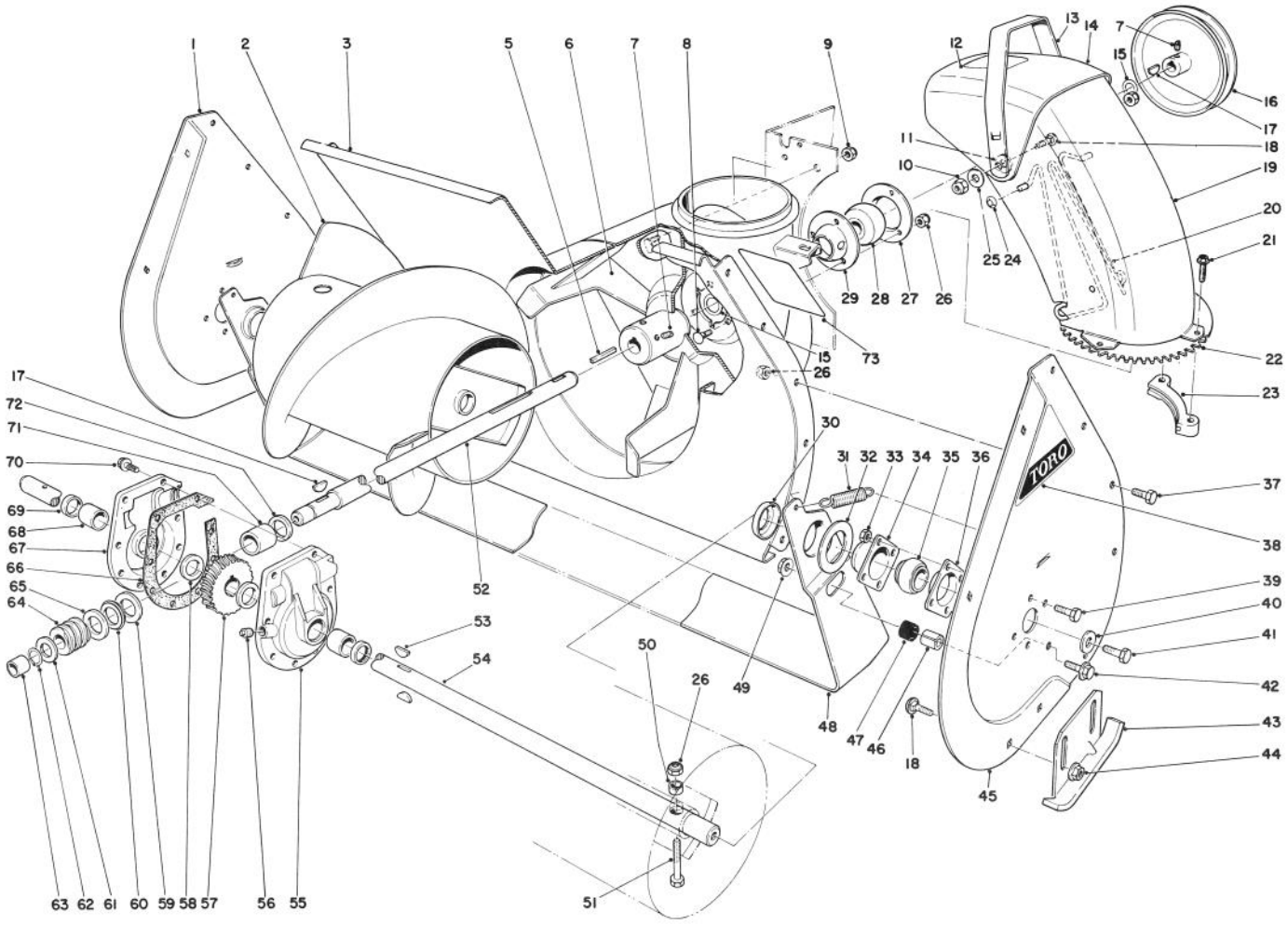

C-0041-89

AUGER ASSEMBLY (Continued)

Ref. No.	Part No.	Description	No. Used
68	256-237	Bushing	2
69	7-0045	Oil Seal	2
70	32144-41	Thread Form Screw	8
71	20-3210	Bushing	1
72	237-87	Seal	1

Ref. No.	Part No.	Description	No. Used
73	53-7670	Decal — Auger Warning	1
*	19-7000	Gear Case Assembly Complete	1
*	20-0690	Drift Breaker Kit (Optional)	1
*	12-8789	Bearing Assembly (Incl. Ref. #27-29)	1

*Not Illustrated

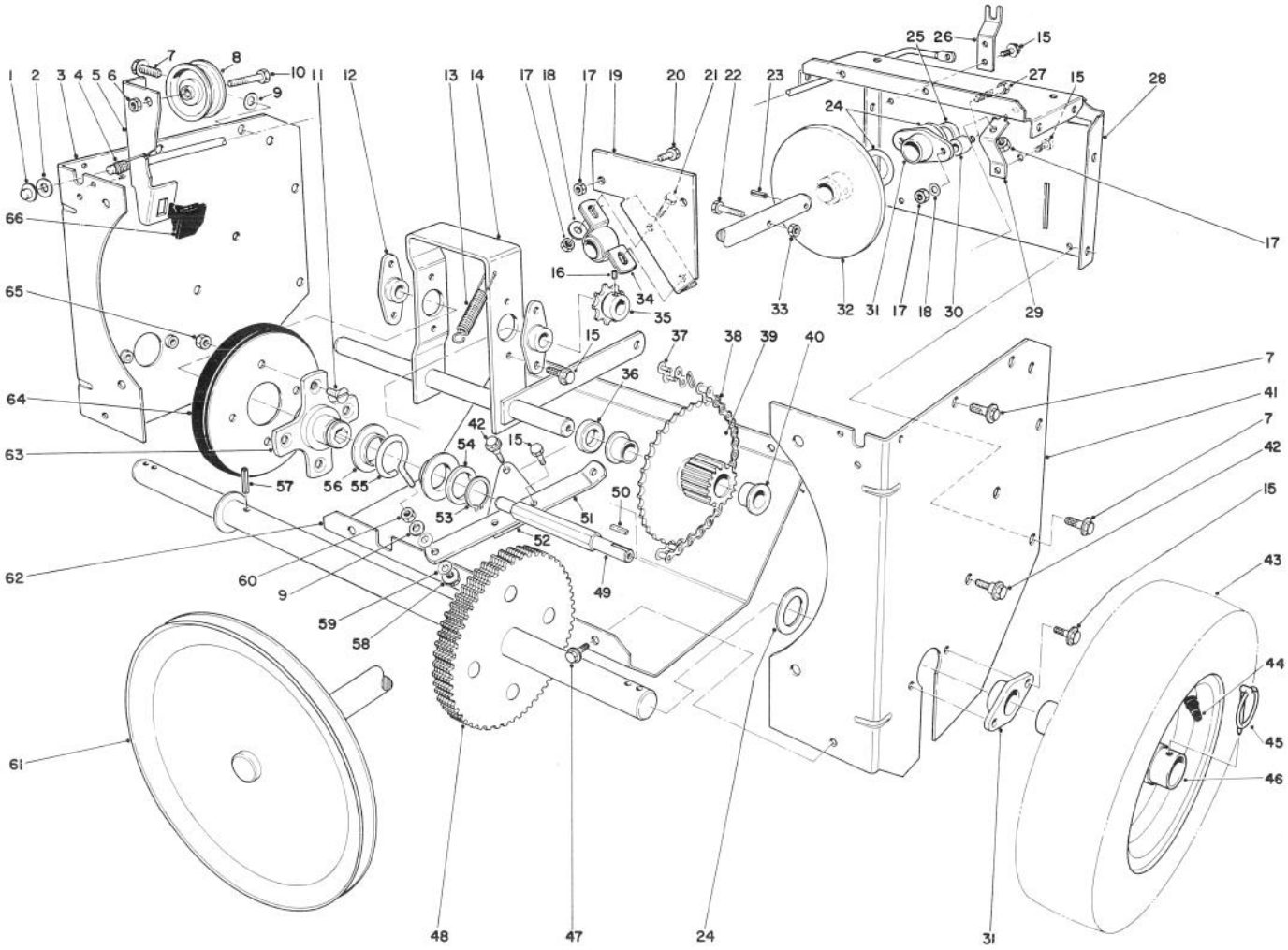

C-0042-89

TRACTION ASSEMBLY

Ref. No.	Part No.	Description	No. Used
1	3290-383	Pushnut	1
2	3256-25	Flat Washer	1
3	20-1420	Side Plate Traction	1
4	20-1160	Torsion Spring Clutch	1
5	8-9019	Clutch Rod (Incl. Ref. #66)	1
6	3296-44	Locknut	1
7	32144-69	Hex Hd. Thread Forming Screw	8
8	3-4244	Idler Pulley	1
9	3256-45	Flat Washer	2
10	323-8	Capscrew	1
11	32108-94	Screw Flat Head	4
12	20-1620	Bearing Friction Wheel	2
13	11-4640	Spring – Clutch Control	1
14	20-1580	Pivot Shaft	1
15	32144-11	Screw Thread Forming	13
16	3245-32	Set Screw	2
17	3296-29	Locknut	7
18	3256-23	Washer	4
19	36-9990	Bracket – Shaft Support	1
20	322-2	Capscrew	2
21	322-3	Capscrew	2

Ref. No.	Part No.	Description	No. Used
22	321-33	Capscrew	1
23	32121-6	Roll Pin	1
24	3-0737	Thrust Washer	5
25	26-6370	Spacer Drive Shaft	1
26	20-1080	Support Clutch Rod	1
27	322-9	Capscrew	2
28	26-6360	Frame Center	1
29	20-1760	Pivot Bracket	1
30	26-6380	Standoff Drive Shaft	2
31	20-1730	Bearing Axle	3
32	20-1550	Friction Plate	1
33	32152-4	Locknut	1
34	36-9980	Bearing – Pillow Block	1
35	5-9820	Sprocket	1
36	3-7384	Spacer	1
37	2710-6	Connecting Link	1
38	20-1810	Chain	1
39	20-1640	Gear & Bushing (Incl. Ref. #40)	1
40	3-1506	Bushing – Flanged	2
41	20-1430	Side Plate Traction	1
42	11-8140	Shoulder Screw	3

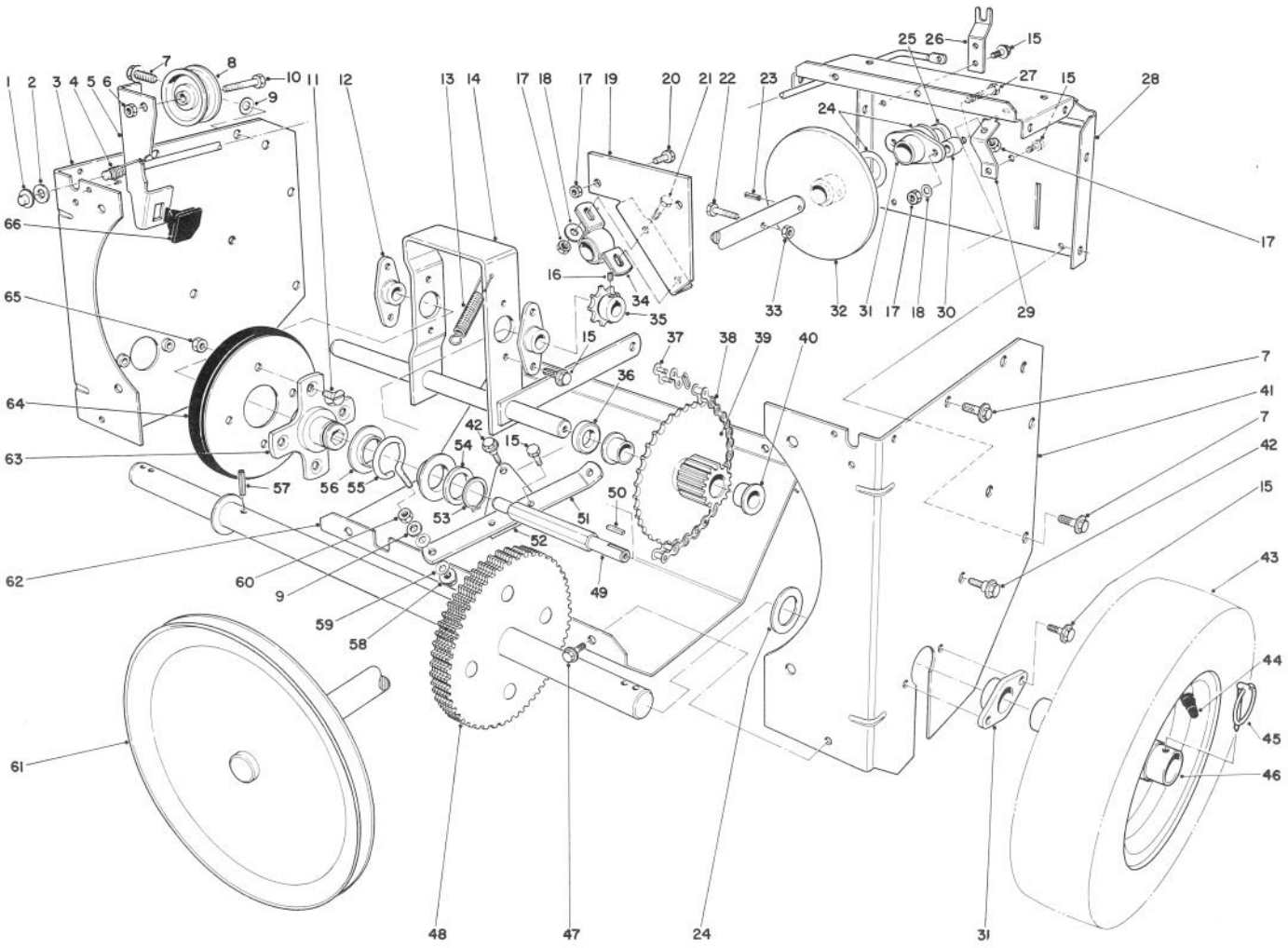

C-0042-89

TRACTOR ASSEMBLY (Continued)

Ref. No.	Part No.	Description	No. Used
43	231-120	Tire	2
44	232-46	Tube	2
45	3290-243	Klik Pin	2
46	241-128	Wheel	2
47	32144-10	Screw Thread Forming	4
48	20-1680	Axle & Gear	1
49	20-1630	Shaft Friction Wheel	1
50	3-6168	Square Key	1
51	20-1780	Linkage Shift	1
52	20-1770	Pivot Plate	1
53	32151-36	Snap Ring	1
54	252-71	Thrust Bearing	1
55	11-8050	Slider Ring Collar	1

Ref. No.	Part No.	Description	No. Used
56	11-8080	Ring — Slider	2
57	32121-9	Roll Pin	1
58	32128-12	Flange Nut	1
59	3290-212	Spring Washer	2
60	3296-6	Nut	1
61	22-7930	Drive Shaft	1
62	20-1840	Lower Shield	1
63	20-3310	Hub — Traction Disc	1
64	40-8170	Friction Wheel	1
65	3296-47	Nut — Lock	4
66	66-8060	Brake Pad — Molded	1
*	12-0179	Loose Parts Kit	1
*	56-2700	Tire Chain Kit (Optional)	1

*Not Illustrated

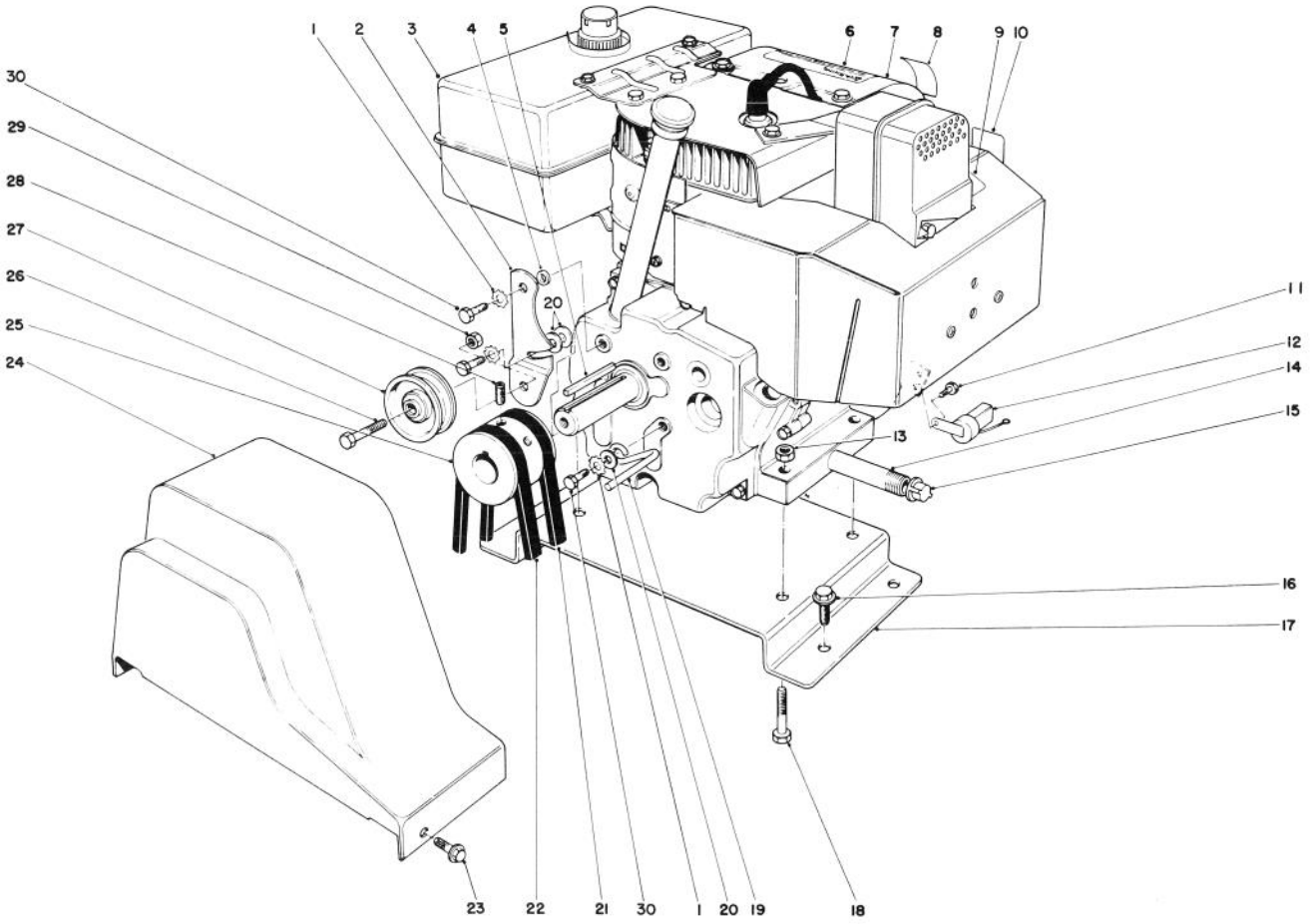

C-0058-89

ENGINE ASSEMBLY

Ref. No.	Part No.	Description	No. Used
1	3255-8	Lockwasher	3
2	20-1800	Idler Arm	1
3	52-2670	Fuel Tank w/Cap	1
4	40-8490	Spacer	1
5	5-0930	Key	1
6	63-3730	Decal – Hazards Caution	1
7		Engine	1
8	62-5760	Decal – Primer	1
9	53-7680	Decal – Hot Surface Warning	1
10	39-3850	Decal – Choke	1
11	32144-4	Screw Thread Forming	1
12	41-8601	Module Interlock	1
13	3296-29	Locknut	4
14	289-34	Pipe Nipple	1
15	288-2	Pipe Cap	1

Ref. No.	Part No.	Description	No. Used
16	32144-69	Hex Form Screw	4
17	37-0320	Plate Engine Mounting	1
18	322-7	Capscrew	4
19	17-5530	Belt Retainer	1
20	3256-23	Washer	3
21	20-1820	V-Belt Traction	1
22	26-9670	V-Belt Auger	1
23	32144-10	Screw Thread Forming	2
24	20-1830	Belt Guard	1
25	21-4100	Pulley	1
26	323-8	Capscrew	1
27	3-4244	Idler Pulley	1
28	3246-18	Set Screw	2
29	3296-44	Locknut	1
30	3210-3	Capscrew	3

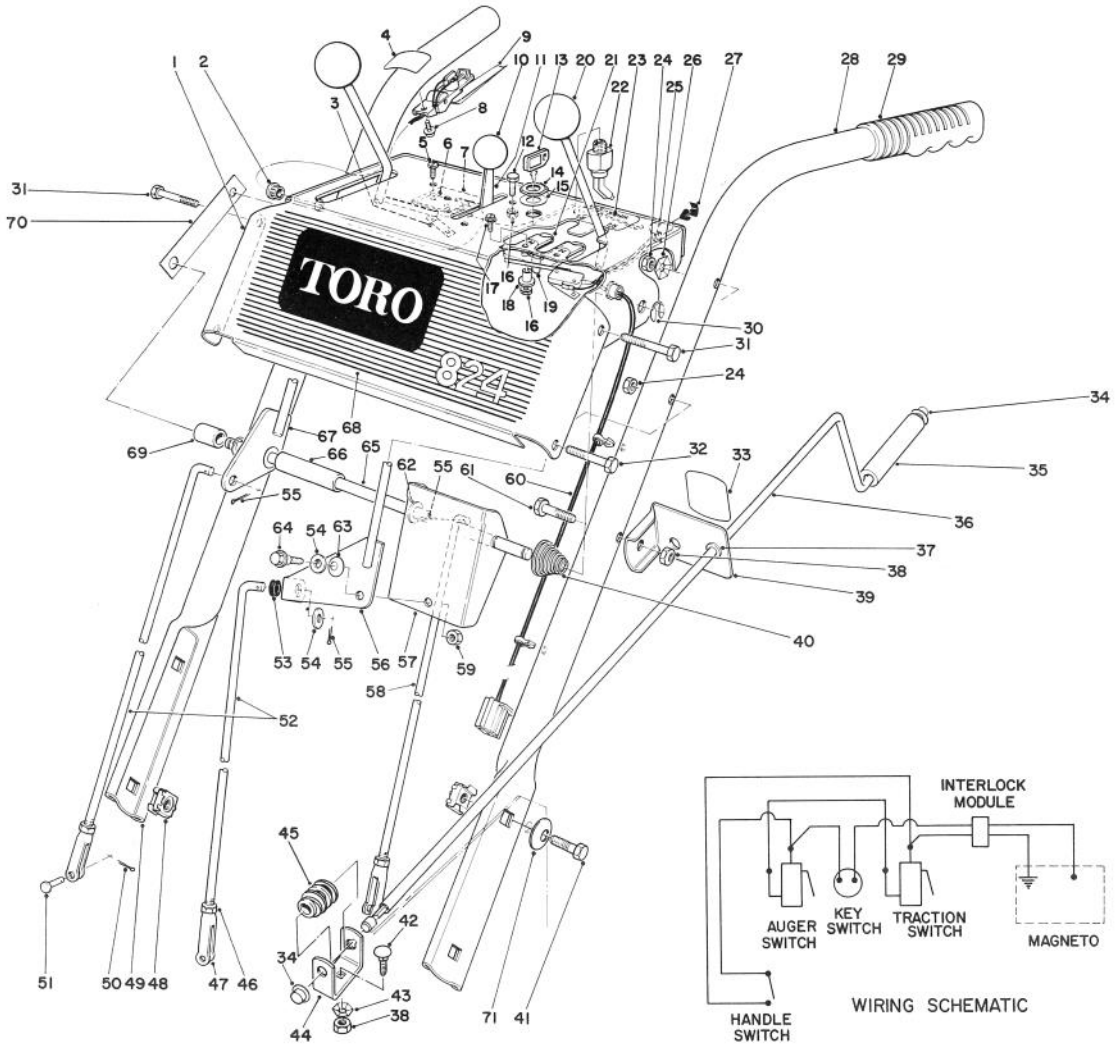

C-0059-89

HANDLE ASSEMBLY

Ref. No.	Part No.	Description	No. Used
1	40-8470	Escutcheon Plate	1
2	237-130	Snap Bushing	1
3	3290-354	Clip	2
4	29-6360	Decal – Safety Interlock	1
5	3290-313	Pan Head Machine Screw	4
6	40-8200	Switch Micro	2
7	22-7950	Switch Mounting Pad	1
8	12-3270	Screw – Special	1
9	40-9690	Interlock Handle Switch	1
10	233-36	Knob	1
11	40-8480	Throttle Control	1
12	32140-99	Screw – Hex Hd.	2
13	62-7770	Key	2
14	218-461	Nut – Hex	1
15	3254-5	Lockwasher	1
16	3296-2	Locknut	2
17	3251-5	Screw – Machine	2
18	22-9740	Spacer – Interlock	2
19	22-9730	Spring – Interlock	1
20	233-21	Knob	2
21	22-9750	Slide – Interlock	1
22	40-8240	On-Off Switch (Incl. Ref. #14 & 15)	1
23	29-6340	Decal – Instructions	1

Ref. No.	Part No.	Description	No. Used
24	32152-4	Locknut	4
25	43-7450	Wire Clamp	5
26	3290-257	Washer – Pyramidal	2
27	43-7460	Stud Mounting	5
28	25-6040	Handle Left	1
29	6-0450	Handle Grip	2
30	32151-43	Klip Ring	2
31	321-11	Capscrew	3
32	321-9	Capscrew	1
33	63-3510	Decal – Chute Direction	1
34	3290-320	Push-On Speed Nut	2
35	66-6540	Chute Control Grip	1
36	40-8380	Rod – Chute Control	1
37	256-249	Nyliner	1
38	3296-29	Locknut	2
39	12-7739	Chute Control Rod Mounting (Incl. Ref. #33 & 37)	1
40	17-5630	Spring Conical	1
41	323-4	Hex Screw	4
42	3230-2	Carriage Bolt	1
43	3290-238	Washer Pyramidal	1
44	40-8280	Worm Bracket	1
45	40-8250	Worm Chute	1

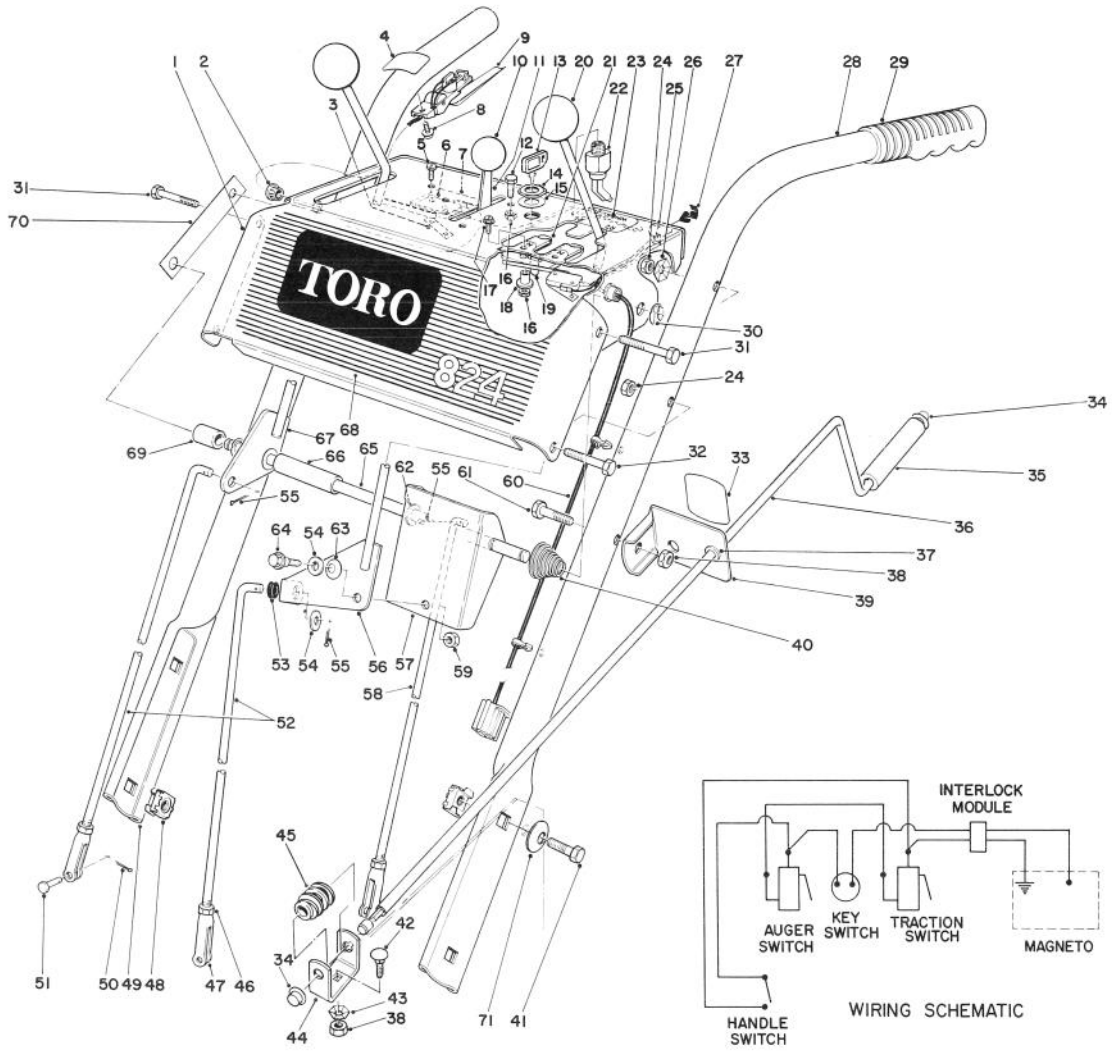

C-0059-89

HANDLE ASSEMBLY (Continued)

Ref. No.	Part No.	Description	No. Used
46	3220-3	Nut – Jam	3
47	40-8180	Clevis	3
48	3290-398	Retainer Nut	4
49	40-8430	Handle Right	1
50	3272-5	Cotter Pin	3
51	283-1	Clevis Pin	3
52	20-1980	Control Rod – Speed Select	2
53	237-89	Rubber Grommet	1
54	3256-24	Washer	2
55	3272-6	Cotter Pin	3
56	20-2020	Shift Lever	1
57	20-2010	Bracket Shift	1
58	20-1970	Control Rod – Traction	1
59	32152-1	Locknut	1

Ref. No.	Part No.	Description	No. Used
60	40-8630	Wire Harness Interlock	1
61	322-9	Capscrew	1
62	3256-25	Washer	2
63	3290-213	Spring Washer	1
64	11-8140	Shoulder Screw	1
65	20-1910	Pivot Rod	1
66	28-5660	Spacer Shift Lever	1
67	20-1920	Lever	1
68	66-6580	Decal – Escutcheon	1
69	28-5670	Spacer – Auger Lever	1
70	25-9760	Strap Escutcheon Support	1
71	3290-461	Washer — Belleville	4
*	3290-378	Tie Wrap	2

*Not Illustrated

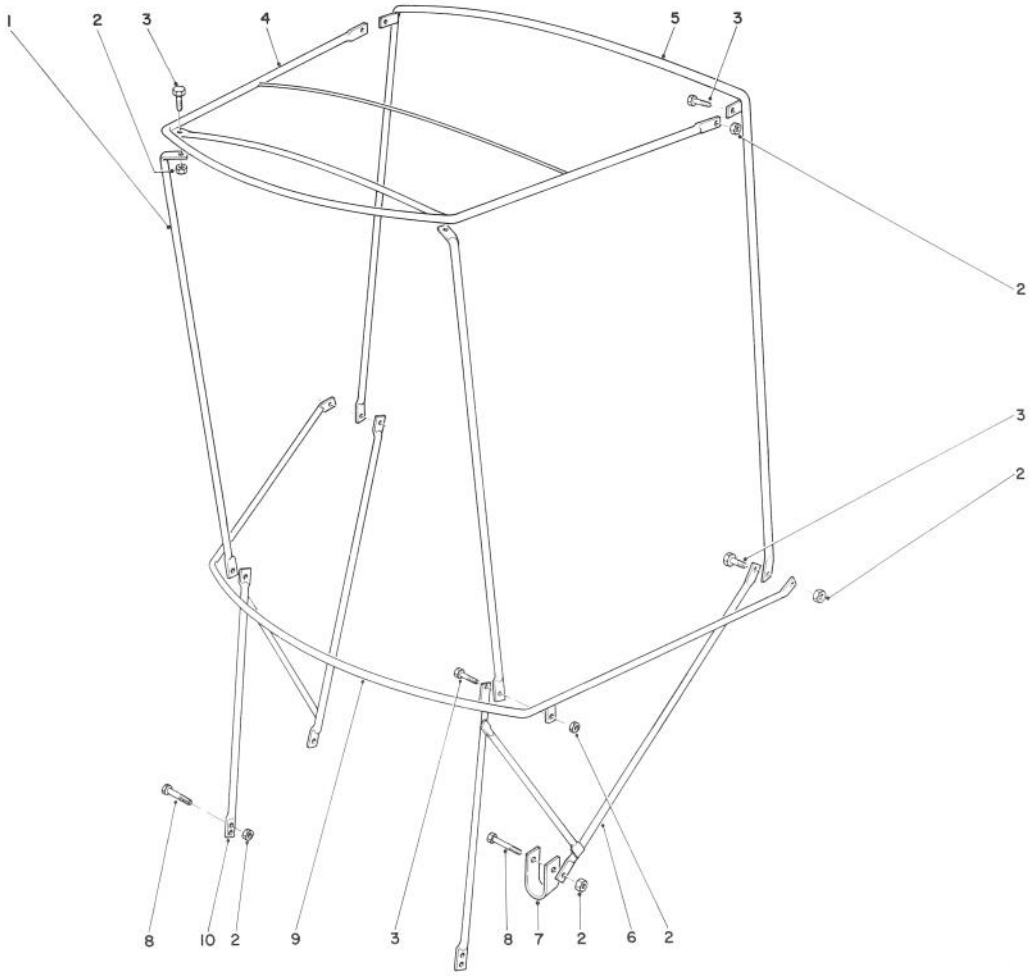

C-0044-89

SNOW CAB ASSEMBLY MODEL 42-3380 (Optional)

Ref. No.	Part No.	Description	No. Used
1	12-8040	Front Corner Post	2
2	32153-4	Locknut	12
3	321-4	Capscrew	8
4	12-8010	Top Frame	1
5	12-8030	Rear Vertical Bow	1
6	42-4060	Attaching Bracket L.H.	1

Ref. No.	Part No.	Description	No. Used
7	12-8050	"U" Clamp	2
8	321-11	Capscrew	4
9	12-8020	Horizontal Curved Bow	1
10	42-4050	Attaching Bracket R.H.	1
*		Vinyl Cover	1

*Not Illustrated

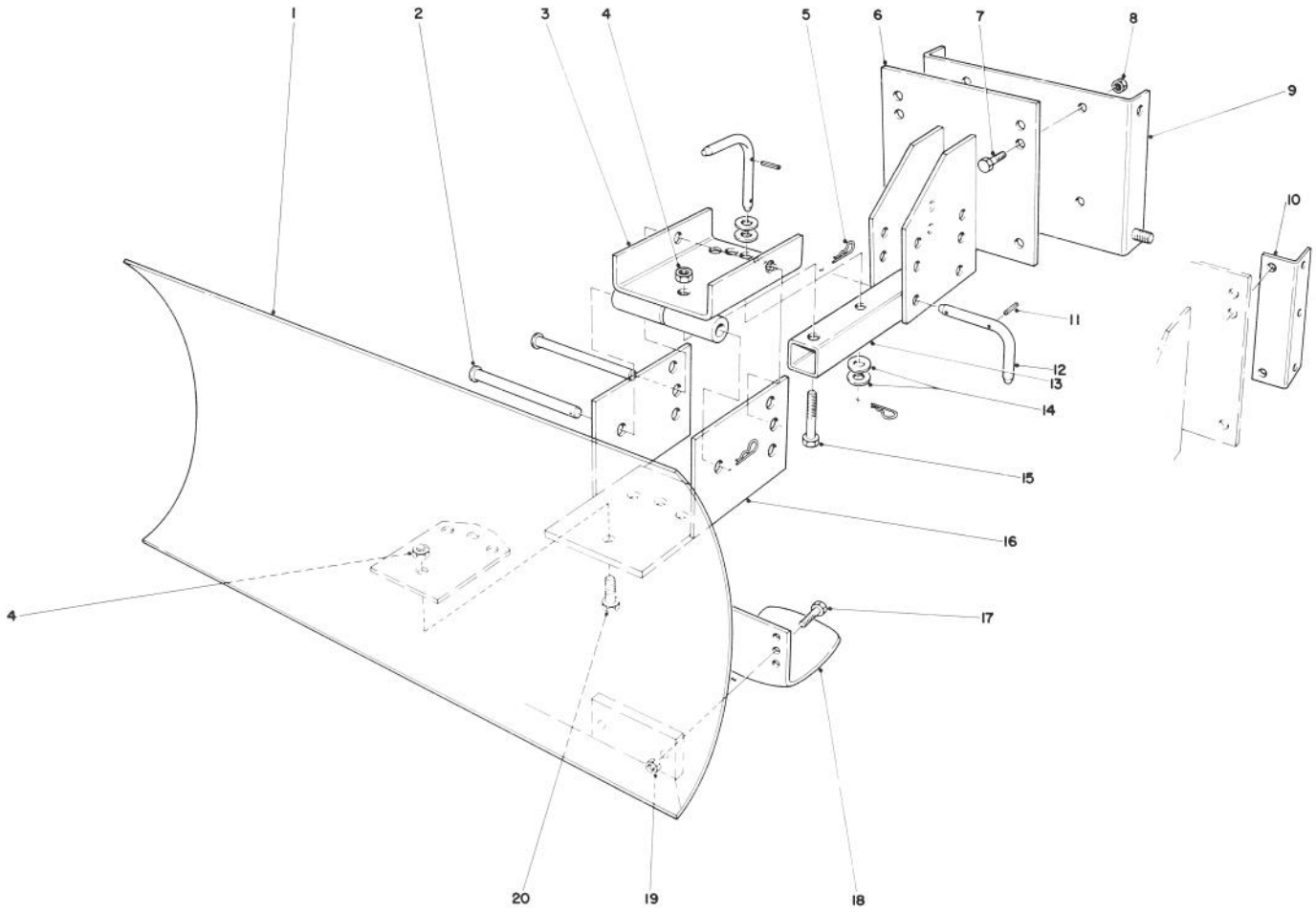

C-0036-89

GRADER BLADE ASSEMBLY MODEL 59099 (Optional)

Ref. No.	Part No.	Description	No. Used
1	7-4374	Blade	1
2	283-38	Pin	2
3	20-5090	Swivel Bracket	1
4	32152-3	Locknut	5
5	3290-322	Hair Pin Cotter	5
6	20-5170	Mounting Plate	1
7	323-6	Capscrew	4
8	32152-2	Locknut	4
9	22-4920	Mounting Plate Bracket (Used with 826 and 1132 Only)	1
10	39-7850	Mounting Rail (Used With 3521, 421 & 521 Units Only)	2
11	32121-45	Roll Pin	3
12	20-5210	Pivot Pin (Incl. Ref. #11)	3
13	20-5140	Blade Tongue	1

Ref. No.	Part No.	Description	No. Used
14	3256-5	Flat Washer	4
15	325-11	Capscrew	1
16	20-5130	Blade Adjustment Plate	1
17	322-6	Capscrew	4
18	7-1023	Skid	2
19	32152-1	Locknut	4
20	325-5	Capscrew	4
*		Air Cleaner Kit (Tecumseh)	1
*†	650152	Screw	2
*†	31752	Decal	1
*†	31692	Body	1
*†	30727	Element	1
*†	28820	Screw w/Lockwasher	2
*†	31691	Bracket	1
*†	27277	Gasket	1

*Not Illustrated

†Obtain From Your Local Tecumseh Dealer

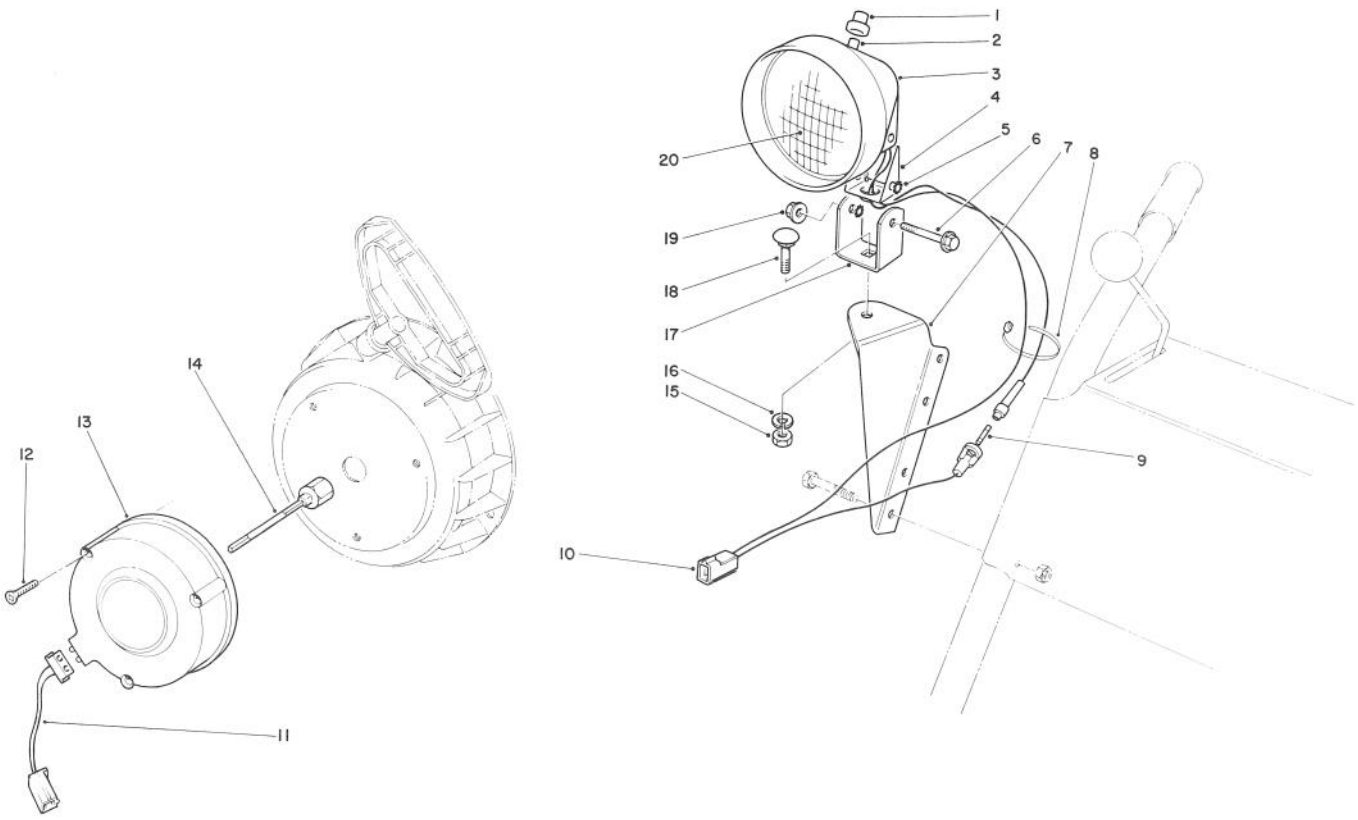

C-0037-89

LIGHT KIT NO. 54-9822 (Optional)

Ref. No.	Part No.	Description	No. Used
1	218-473	Boot — Switch	1
2	218-553	Switch Assembly	1
3	218-552	Bucket — Headlamp	1
4	218-554	Bracket	1
5	3255-8	Washer — Lock	2
6	322-13	Screw — Hex. Flange Hd.	1
7	54-9830	Mount — Lamp	1
8	3290-378	Tie Wrap	2
9†		Fuse — 7½ Amp.	1
10	218-555	Wire Assembly	1
11	2210-272	Connector — Light	1
12	2210-273	Screw — Self Tapping	3

Ref. No.	Part No.	Description	No. Used
13	2210-274	Alternator	1
14	2210-269	Shaft — Alternator 4"	1
15	3217-7	Nut — Hex	1
16	3253-21	Washer — Lock	1
17	218-556	Bracket — U	1
18	3231-2	Bolt — Carriage	1
19	32128-35	Nut — Flange Lock	1
20	218-16	Lens — Sealed Beam	1
*	54-9871	Headlamp Assembly Complete (Incl. Ref. #1-6, 9-10 & 15-20)	1

*Not Illustrated
†Obtain Locally

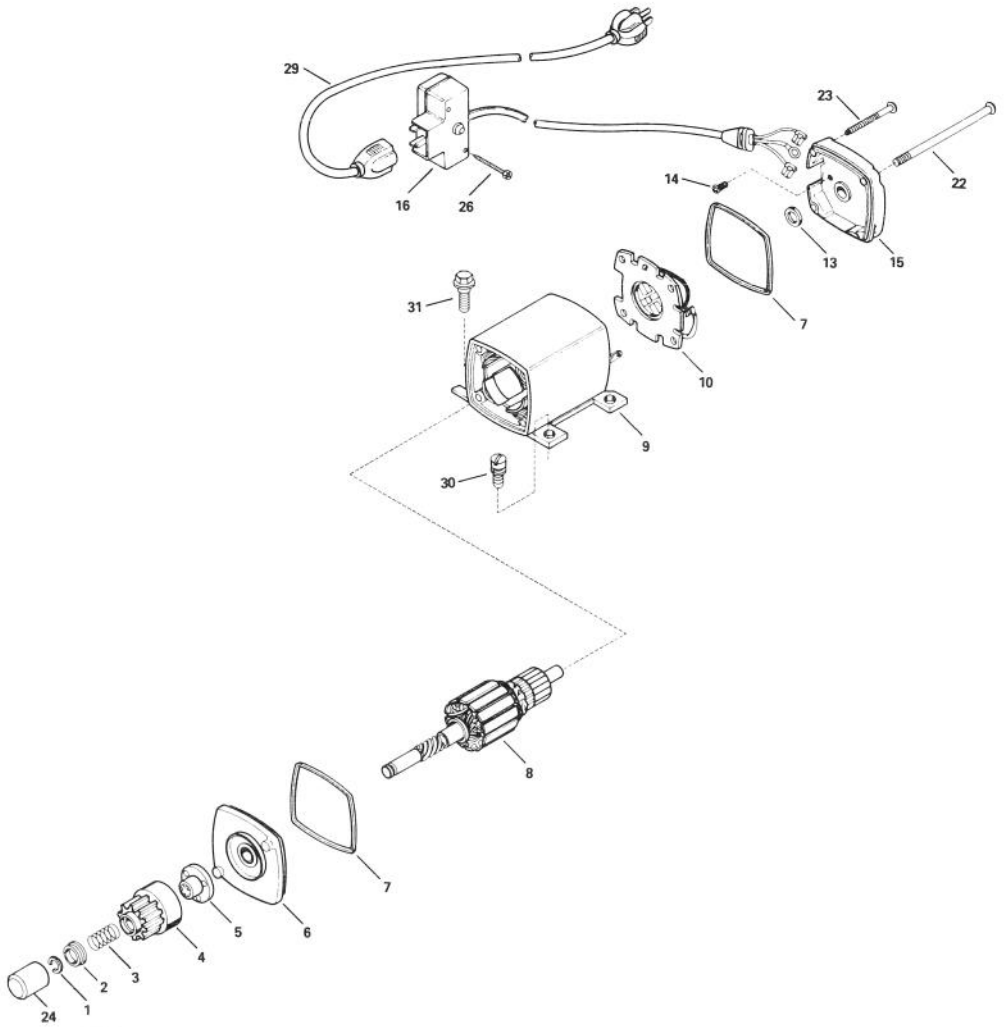

ELECTRIC STARTER MOTOR KIT NO. 37-4810

Ref. No.	Part No.	Description	No. Used
1	33842	Ring, Retainer	1
2	33430	Retainer, Spring	1
3	33431	Spring, Anti-drift	1
4	33432	Gear	1
5	33433	Nut, Engaging	1
6	35449	Cap Assy., Drive End (Incl. Ref. #7)	1
7	35450	"O" Ring	2
8	33541A	Armature	1
9	35451	Housing Assy.	1
10	35452	Card Assy., Brush	1
13	590500	Washer, Thrust	1

Ref. No.	Part No.	Description	No. Used
14	33441	Screw, Ground	1
15	35453	Cap Assy., Commutator End (Incl. Ref. #7)	1
16	35454	Box Assy., Switch	1
22	35455	Bolt, Case	2
23	35456	Screw, Grounding	1
24	33451	Cover, Dust	1
26	650819	Screw, Hex Hd. Self-Tap	2
29	32450A	Cord, Extension (10'6")	1
30	30063	Screw, Fil. Hd.	2
31	650820	Screw, Hex Hd. Shoulder	2

Note: Order individual parts from your local Tecumseh dealer.

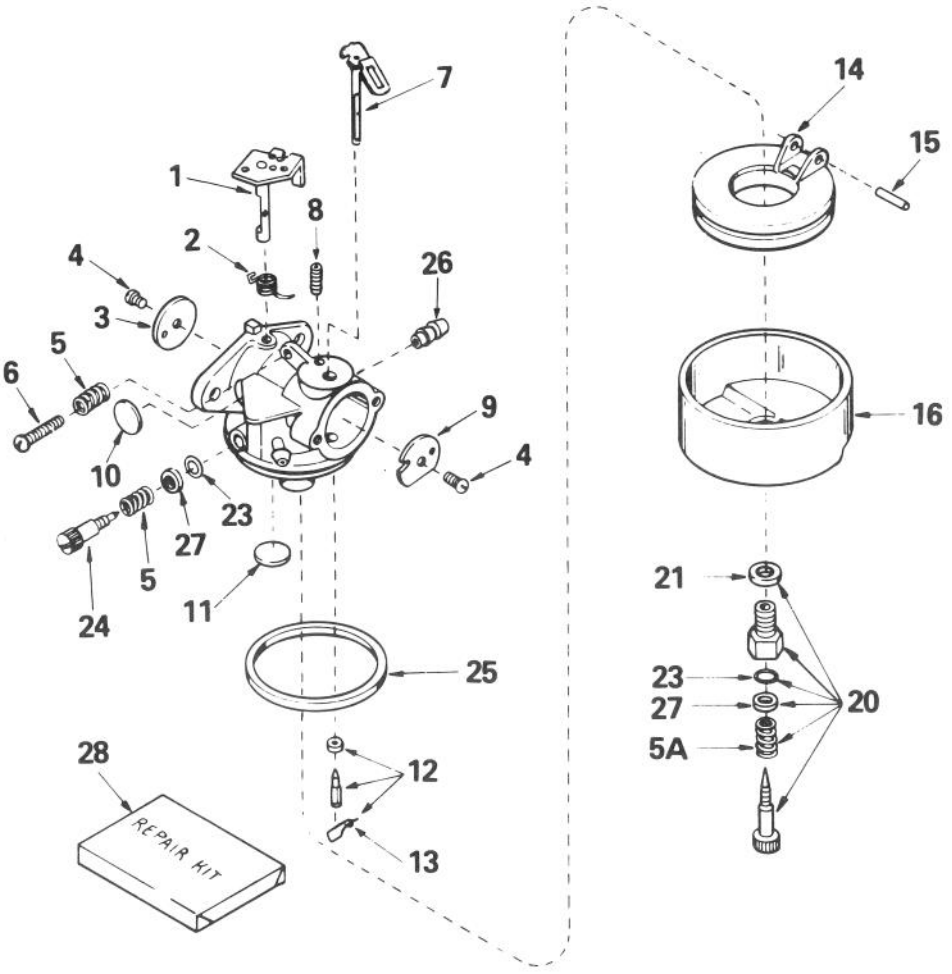

CARBURETOR NO. 632334

Ref. No.	Part No.	Description	No. Used
	632334	Carburetor	1
1	631776	Shaft & Lever Assy., Throttle	1
2	631970	Spring, Throttle Return	1
3	631778	Shutter, Throttle	1
4	650506	Screw, Throttle & Choke Shutter	2
5	630766	Spring, Regulating Screw	2
5A	630738	Spring, Main Adjustment Screw	1
6	650417	Screw, Idle Regulating	1
7	632112	Shaft & Lever Assy., Choke	1
8	630735	Spring, Choke Positioning	1
9	632174	Shutter, Choke	1
10	*630748	Plug, Welch	1
11	*631027	Plug, Welch	1

Ref. No.	Part No.	Description	No. Used
12	*631021	Inlet Needle, Seat & Clip Assy. (Incl. Ref. #13)	1
13	631022	Clip, Inlet Needle	1
14	632019	Float, Carburetor	1
15	*631024	Shaft, Float	1
16	631867	Bowl, Float	1
20	*632239	Adjustment Screw Assy., Main (Incl. Ref. #5A, 21, 23 & 27)	1
21	27110	Gasket, Bowl-to-body	1
23	*630740	"O" Ring, Adjustment Screw	2
24	*632281	Screw, Idle Adjustment	1
25	*631028	Gasket, Bowl-to-body	1
26	632164	Fitting, Fuel Inlet	1
27	630739	Washer	2
28	632347	Repair Kit (Incl. Items Marked *)	1

ENGINE TECUMSEH MODEL NO. HM80-155291N

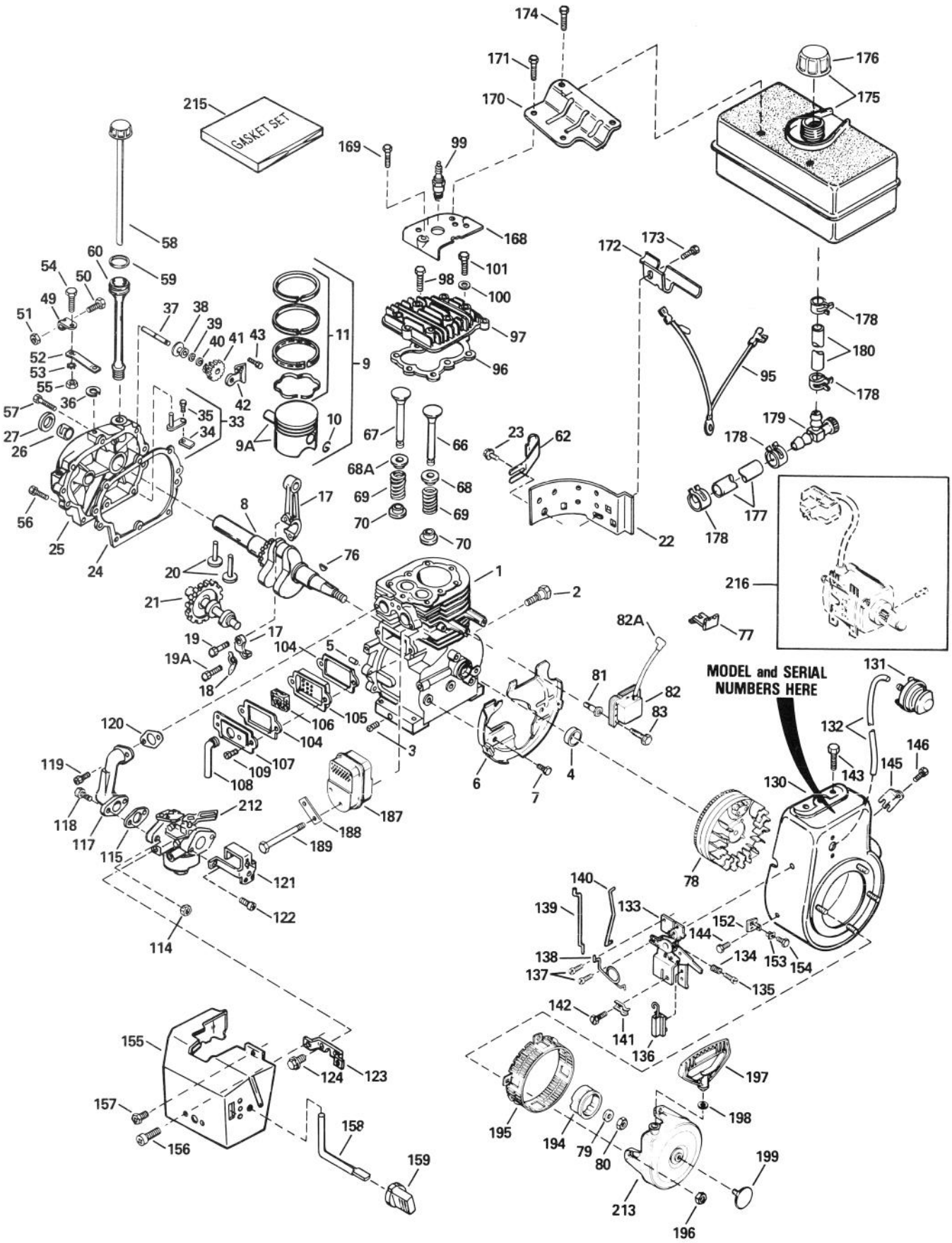

ENGINE TECUMSEH MODEL NO. HM80-155291 N

Ref. No.	Part No.	Description	No. Used
1	35385	Cylinder (Incl. Ref. #3, 4 & 5)	1
2	650820	Screw, Hex Hd. Shoulder	1
3	27642	Plug, Pipe	1
4	35319	Seal, Oil	1
5	27652	Pin, Dowel	1
6	35326	Baffle, Blower Housing	1
7	650561	Screw, Hex Washer Hd. Durlok	1
8	35372	Crankshaft	1
9	34552	Piston, Pin & Ring Assy. (Incl. Ref. #9A, 10 & 11) (Std.)	1
9	34553	Piston, Pin & Ring Assy. (Incl. Ref. #9A, 10 & 11) (.010 oversize)	1
9	34554	Piston, Pin & Ring Assy. (Incl. Ref. #9A, 10 & 11) (.020 oversize)	1
9A	34329A	Piston & Pin Assy. (Incl. Ref. #10)(Std.)	1
9A	34330A	Piston & Pin Assy. (Incl. Ref. #10)(.010 oversize)	1
9A	34331A	Piston & Pin Assy. (Incl. Ref. #10)(.020 oversize)	1
10	27888	Ring, Piston Pin Retaining	1
11	34332	Ring Set, Piston (Std.)	1
11	34333	Ring Set, Piston (.010 oversize)	1
11	34334	Ring Set, Piston (.020 oversize)	1
17	35373A	Rod Assy., Connecting (Incl. Ref. #18, 19 & 19A)	1
18	35374	Dipper, Oil	1
19	650908	Bolt, Connecting Rod	1
19A	650882	Bolt, Connecting Rod	1
20	34034	Lifter, Valve	1
21	35375	Camshaft (Mechanical Compression Release)	1
22	33273A	Extension, Blower Housing	1
23	650128	Screw, Hex Hd. Sems	1
24	*35262	Gasket, Cylinder Cover	1
25	35376	Cover Assy., Cylinder (Incl. Ref. #26, 27 & 37)	1
26	35377	Bushing, Crankshaft	1
27	35319	Seal, Oil	1
33	30699C	Rod Assy., Governor (Incl. Ref. #34 & 35)	1
34	30700	Yoke, Governor	1
35	650494	Screw, Fil. Hd. Sems	1
36	29642	Ring, Retaining	1
37	31845	Shaft, Governor	1
38	30588A	Spool, Governor	1
39	30590A	Washer, Flat	1
40	29193	Ring, Retaining	1
41	35378	Gear, Governor (Incl. Ref. #39)	1
42	33369	Bracket, Governor Gear	1
43	650836	Screw, Hex Washer Hd., Thread Forming	1
49	29916	Clamp, Governor Lever	1
50	29826	Screw, Hex Washer Hd.	1
51	29216	Locknut, Hex "Keps"	1
52	33454	Lever, Governor	1
53	29918	Washer, E.T. Lock	1
54	650548	Screw, Hex Washer Hd.	1
55	30322	Locknut, Hex "Keps"	1
56	650832	Screw, Hex Washer Hd. Powerlok	1
57	650833	Screw, Hex Washer Hd. Powerlok	1
58	35555	Dipstick, Oil	1
59	35499	"O" Ring	1
60	35554	Tube, Oil Fill	1
62	35540	Clip, Fill Tube	1
66	27878A	Valve, Exhaust (Incl. Ref. #70)(Std.)	1
66	27880A	Valve, Exhaust (Incl. Ref. #70)(1/32" oversize)	1
67	34035	Valve, Intake (Incl. Ref #70)(Std.)	1
67	34036	Valve, Intake (Incl. Ref. #70) (1/32" oversize)	1
68	27882	Cap, Upper Valve Spring	1
68A	34689	Seal Assy., Intake Valve	1
69	27881	Spring, Valve	1
70	32581	Cap, Lower Valve Spring	1
76	32589	Key, Flywheel	1
77	29443	Clip, Spring	1
78	611091	Flywheel (w/Ring Gear)	1
79	650880	Washer, Lock	1
80	650881	Nut, Flywheel	1
81	650872	Stud, Solid State Mounting	1
82	35135	Solid State Assy.	1
82A	610118	Cover, Spark Plug	1
83	650814	Screw, Hex Hd. Sems,	1
95	35253	Wire, Ground	1
96	*34041	Gasket, Cylinder Head	1
97	34030	Head, Cylinder	1
98	6021A	Screw, Hex Flange Hd.	1
99	35395	Spark Plug (Champion RJ-19LM or equivalent)	1
100	650691	Washer, Flat	1
101	650727	Screw, Special Hex Hd. Tapped	1
104	*27896	Gasket, Breather	1
105	28423	Body, Breather	1
106	28424	Element, Breather	1

*Indicates Parts Included in Gasket Set, Ref. #215.

ENGINE TECUMSEH MODEL NO. HM80-155291N (Continued)

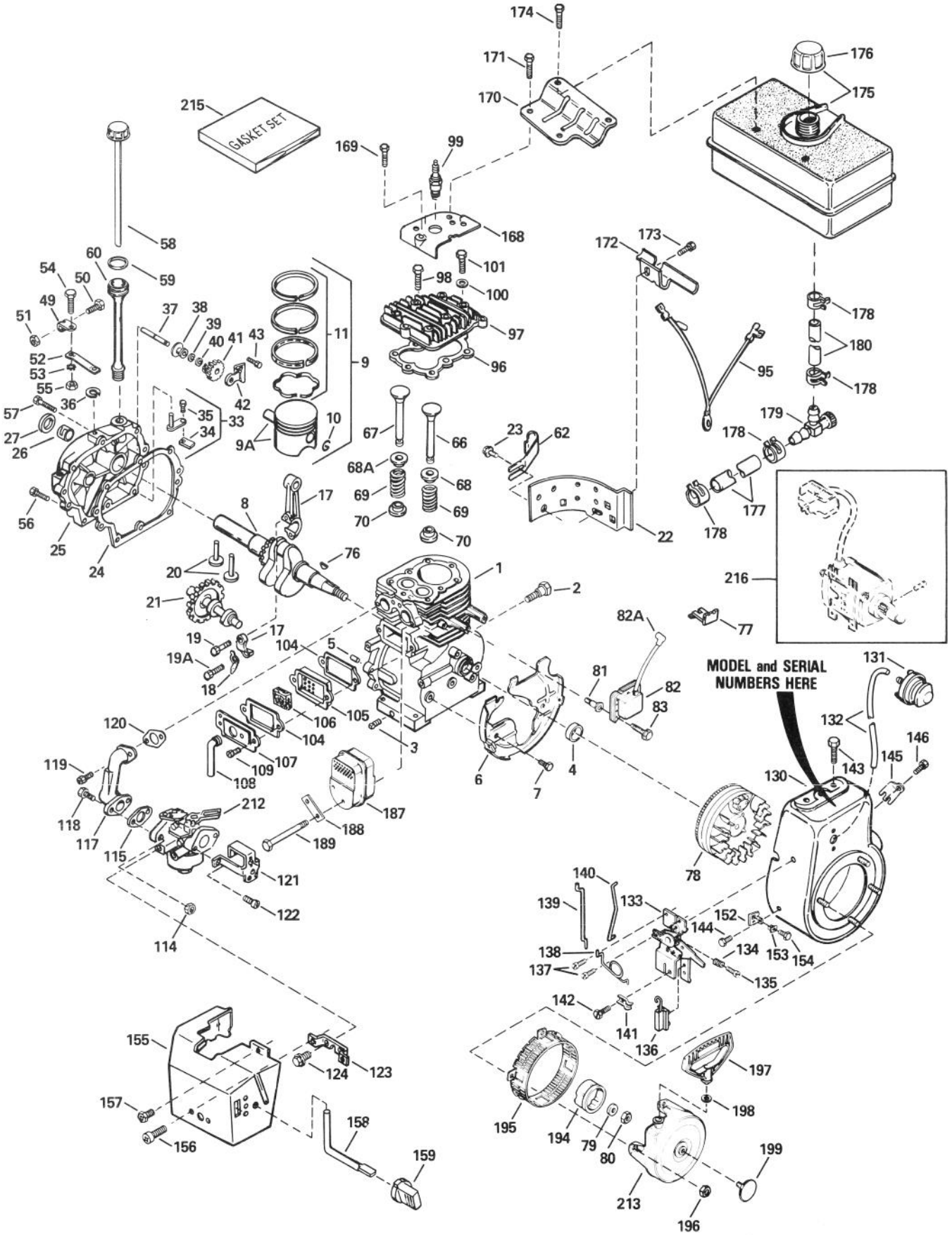

TECUMSEH 4-CYCLE ENGINE MODEL NO. HM80-155291N (Continued)

Ref. No.	Part No.	Description	No. Used
107	28425	Cover, Breather	1
108	35350	Tube, Breather	1
109	650128	Screw, Hex Hd. Sems	1
114	29752	Nut & Lockwasher	1
115	*33263	Gasket, Carburetor	1
117	33877	Pipe, Intake	1
118	30088A	Screw, Fil. Hd. Sems	1
119	650378	Screw, Torx Fil. Hd. Sems	1
120	*27915	Gasket, Intake Pipe	1
121	34587	Bracket, Choke	1
122	28820	Screw, Fil. Hd. Sems	1
123	33377	Bracket, Carburetor Cover Mounting	1
124	650767	Screw, Hex Washer Hd. Sems, Taptite	1
130	34822A	Housing, Blower	1
131	570682	Primer Assembly	1
132	32180C	Line, Primer	1
133	34664	Bracket Assy., Control (Incl. Ref. #134, 135, 136 & 138)	1
134	31342	Spring, Compression	1
135	650549	Screw, Fil. Hd.	1
136	610973	Terminal Assembly	1
137	650821	Screw, Hex Washer Hd. Thread Cutting	1
138	34663	Spring, Speed Control	1
139	34667	Link, Governor	1
140	33878	Link, Governor-to-throttle	1
141	27793	Clip, Conduit	1
142	28942	Screw, Hex Washer Hd. Sems	1
143	650788	Screw, Hex Hd. Spinlock Thread Forming	1
144	29747B	Screw, Phil. Hex Hd. Sems	1
145	33013	Cover, Starter Hole	1
146	650760	Screw, Pan Hd. Taptite	1
152	34126	Bracket, Grommet Mounting	1
153	28545	Grommet, Plastic	1
154	650760	Screw, Pan Hd. Taptite	1

Ref. No.	Part No.	Description	No. Used
155	35057	Cover, Carburetor	1
156	28942	Screw, hex Washer Hd. Sems	1
157	650765	Screw, Hex Washer Hd., Self-Drilling	1
158	34586	Rod, Choke	1
159	35438	Knob, Choke	1
168	33272A	Cover, Cylinder Head	1
169	650802	Screw, Hex Washer Hd., Taptite	1
170	34154	Plate, Fuel Tank Mounting	1
171	650713	Screw, Hex Hd.	1
172	34155	Bracket, Fuel Tank	1
173	650561	Screw, Hex Washer Hd. Durlok	1
174	650665	Screw, Hex Washer Hd. Thread Cutting	1
175	34156A	Tank, Fuel (Incl. Ref. #176 & 178)	1
176	35355	Cap, Fuel Tank	1
177	30705	Line, Fuel	1
178	26460	Clamp, Fuel Line	1
179	32961	Valve, Fuel Shut-Off	1
180	29774	Line, Fuel	1
187	35056	Muffler	1
188	31588	Plate, Lock	1
189	792093	Screw, Flanged Hex Hd.	1
194	35287	Hub, Starter	1
195	35446	Screen, Starter	1
196	29752	Nut & Lockwasher	1
197	590574	Starter Handle, Mitten Grip	1
198	650168	Washer, Flat	1
199	35392	Plug, Starter	1
212	632334	Carburetor (Incl. Ref. #115)	1
213	590630	Starter, Rewind	1
215	33279F	Gasket Set (Incl. items marked *) Electric Starter Kit No. 33329C (Optional) Order as an Accessory	1

*Indicates Parts Included in Gasket Set, Ref. #215.

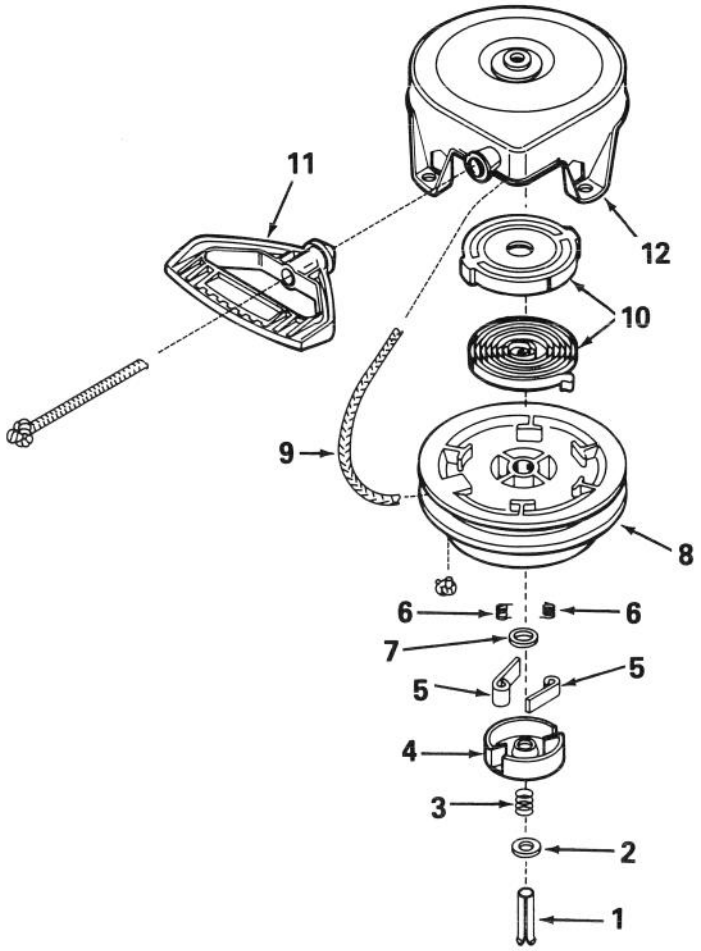

REWIND STARTER NO. 590630

Ref. No.	Part No.	Description	No. Used
	590630	Starter, Rewind	1
1	590599A	Pin, Spring (Incl. Ref. #7)	1
2	590600	Washer	1
3	590598	Spring, Brake	1
4	590627	Retainer	1
5	590641	Dog, Starter	2
6	590617	Spring, Dog	2

Ref. No.	Part No.	Description	No. Used
7	590601	Washer	1
8	590628	Pulley	1
9	590451A	Rope, Starter	1
10	590629	Spring & Keeper Assy.	1
11	590574	Handle, Mitten Grip (Not included with Starter)	1
12	590631	Housing Assy., Starter	1

THE TORO PROMISE

It is Toro's policy to design and produce TORO products to provide our customers with a high level of performance and durability in normal operation. Our products, however, are produced in high volume, and it is inevitable that occasionally a unit will reach a customer with a defect in materials or workmanship which causes the unit to fall below the normal high level of TORO performance. Invariably, such a defect will be noticed in a residential product within two years after purchase. Recognizing this possibility, Toro has established a simple guarantee policy and procedure that is intended to assure customer satisfaction. This guarantee statement is as follows:

The Toro Promise

A Two Year Limited Warranty
On All
Gasoline Powered Consumer Products

The Toro Company promises to repair these TORO Products if defective in materials or workmanship. The following time periods from the date of purchase apply:

Residential Product . . . . . 2 Years
Residential Products Used Commercially . . . 45 Days

The costs of parts and labor are included, but the customer pays the transportation costs. Just return any residential product to an Authorized TORO Service Dealer or TORO Distributor.

Should you feel your TORO is defective and wish to rely on The Toro Promise, the following procedure is recommended:

1. Contact any Authorized TORO Service Dealer, TORO Master Service Dealer, or TORO Distributor (the Yellow Pages of your telephone directory is a good reference source).
2. He will either instruct you to return the product to him or recommend another Authorized TORO Service outlet which might be more convenient.
3. Bring the product along with your original sales slip, or other evidence of purchase date, to the service dealer.
4. The servicing dealer will inspect the unit, advise you whether the product is defective and, if so, make all repairs necessary to correct the defect without extra charge to you.

If for any reason you are dissatisfied with the dealer's analysis of the defect or the service performed, you may contact us.

Write: TORO Customer Service Department
8111 Lyndale Avenue South
Minneapolis, Minnesota 55420

The above remedy of product defects through repair by an Authorized TORO Service Dealer is the purchaser's sole remedy for any defect.

THERE IS NO OTHER EXPRESS WARRANTY. ALL IMPLIED WARRANTIES OF MERCHANTABILITY AND FITNESS FOR USE ARE LIMITED TO THE DURATION OF THE EXPRESS WARRANTY.

Some states do not allow limitations on how long an implied warranty lasts, so the above limitation may not apply to you.

This warranty applies only to parts or components which are defective and does not cover repairs necessary due to normal wear, misuse, accidents, or lack of proper maintenance. Regular, routine maintenance of the unit to keep it in proper operating condition is the responsibility of the owner.

All warranty repairs reimbursable under The Toro Promise must be performed by an Authorized TORO Service Dealer using Toro approved replacement parts.

Repairs or attempted repairs by anyone other than an Authorized TORO Service Account are not reimbursable under The Toro Promise. In addition, these unauthorized repair attempts may result in additional malfunctions, the correction of which is not covered by warranty.

THE TORO COMPANY IS NOT LIABLE FOR INDIRECT, INCIDENTAL OR CONSEQUENTIAL DAMAGES IN CONNECTION WITH THE USE OF THE PRODUCT INCLUDING ANY COST OR EXPENSE OF PROVIDING SUBSTITUTE EQUIPMENT OR SERVICE DURING PERIODS OF MALFUNCTION OR NON-USE.

Some states do not allow the exclusion of incidental or consequential damages, so the above exclusion may not apply to you.

This warranty gives you specific legal rights, and you may also have other rights which vary from state to state.

COUNTRIES OTHER THAN THE UNITED STATES OR CANADA

Customers who have purchased TORO products exported from the United States or Canada should contact their TORO Distributor (Dealer) to obtain guarantee policies for your country, province or state. If for any reason you are dissatisfied with your Distributor's service or have difficulty obtaining guarantee information, contact the TORO importer. If all other remedies fail, you may contact us at The Toro Company.

Compliance with Radio Interference Regulations Certified.
Certifie Conforme au Reglement sur le Brouillage Radioelectrique.

V35-595

PRODUCT CHANGES

In an effort to make improvements available to TORO owners as quickly as possible, minor changes are incorporated into Toro's products from time to time that do not become immediately shown in the Parts Catalog. If such a change apparently has been made in your unit, which is not reflected in your manual, see your TORO Distributor or his authorized TORO Service Dealer for information and part number.

IDENTIFICATION AND ORDERING

Model and Serial Numbers

The Snowthrower has two identification numbers: a model number and a serial number. The two numbers are stamped on a decal which is located on back of engine mounting plate. In any correspondence concerning the Snowthrower, supply model and serial numbers to assure that correct information and replacement parts are obtained.

To order replacement parts from an Authorized TORO Service Dealer, supply the following information:

1. Model and serial numbers of the Snowthrower.
2. Part number, description, and quantity of part(s) desired.

NOTE: Do not order by reference number if a parts catalog is being used; use the PART NUMBER.

Keep Your TORO All Toro Genuine TORO PARTS & ACCESSORIES ***Insist on Genuine Toro Parts***

MAINTENANCE RECORD

Litho in U.S.A.