Form No. 3354-735 Rev A

Dingo® 320-D Compact Utility Loader

Model No. 22303—260000001 and Up

Operator's Manual

Register your product at www.toro.com.

Original Instructions (EN)

Warning

CALIFORNIA

Proposition 65 Warning

Diesel engine exhaust and some of its constituents are known to the State of California to cause cancer, birth defects, and other reproductive harm.

Because in some areas there are local, state, or federal regulations requiring that a spark arrestor be used on the engine of this machine, a spark arrestor is incorporated with the muffler assembly.

These parts are approved by the United States Department of Agriculture Forestry Service.

Important This engine is equipped with a spark arrester muffler. It is a violation of California Public Resource Code Section 4442 to use or operate this engine without a spark arrester muffler on any forest–covered, brush–covered or grass–covered land. Other states or federal areas may have similar laws.

This spark ignition system complies with Canadian ICES-002.

Ce système d'allumage par étincelle de véhicule est conforme à la norme NMB-002 du Canada.

The enclosed Engine Owner's Manual is supplied for information regarding The U.S. Environmental Protection Agency (EPA) and the California Emission Control Regulation of emission systems, maintenance and warranty.

Keep this engine Owner's Manual with your unit. Should this engine Owner's Manual become damaged or illegible, replace immediately. Replacements may be ordered through the engine manufacturer.

Contents

	Page
Introduction	2
Safety	3
Safe Operating Practices	3
Slope Chart	6
Safety and Instruction Decals	7
Assembly	9
Loose Parts	9
Installing the Valve Lever	10
Charging and Connecting the Battery	10
Specifications	11
Attachments	11
Stability Data	11
Before Operating	13
Adding Fuel	13
Draining Water from the Fuel Filter	13
Checking the Oil Level	13
Checking the Cooling System	14
Removing Debris from the Traction Unit	14
Checking the Hydraulic Fluid	15
Tire pressure	15
Operation	16
Traction Unit Overview	16
Controls	16
Indicator Lights	18
Starting and Stopping the Engine	19
Driving Forward or Backward	19
Stopping the Traction Unit	19
Moving a Non-functioning Traction Unit	20
Using the Cylinder Locks	20
Installing and Removing Attachments	21
Securing the Traction Unit for Transport	22
Maintenance	23
Recommended Maintenance Schedule	23
Opening the Access Covers	24
Greasing the Traction Unit	24
Servicing the Air Cleaner	25
Servicing the Engine Oil	25
Servicing the Battery	27
Servicing the Hydraulic System	28
Changing the Fuel Filter	29
Bleeding the Fuel System	30
Draining the Fuel Tank	30
Cleaning and Storage	31
Troubleshooting	32
Schematics	37
The Toro Dingo Product Line Warranty	40

Introduction

Thank you for purchasing a Toro product.

All of us at Toro want you to be completely satisfied with your new product, so feel free to contact your local Authorized Service Dealer for help with service, genuine replacement parts, or other information you may require.

Whenever you contact your Authorized Service Dealer or the factory, always know the model and serial numbers of your product. These numbers will help the Service Dealer

© 2005 by The Toro Company

8111 Lyndale Avenue South
Bloomington, MN 55420-1196

Contact us at www.toro.com
All Rights Reserved
Printed in the USA

or Service Representative provide exact information about your specific product. You will find the model and serial number plate at the location shown in Figure 1.

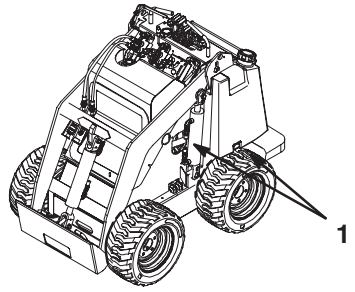

Figure 1

1. Model and serial number plate (it will be in one of two locations)

For your convenience, write the product model and serial numbers in the space below.

Model No: _____

Serial No. _____

Read this manual carefully to learn how to operate and maintain your product correctly. Reading this manual will help you and others avoid personal injury and damage to the product. Although we design, produce and market safe, state-of-the-art products, you are responsible for using the product properly and safely. You are also responsible for training persons, who you allow to use the product, about safe operation.

The warning system in this manual identifies potential hazards and has special safety messages that help you and others avoid personal injury, even death. ***Danger***, ***Warning***, and ***Caution*** are signal words used to identify the level of hazard. However, regardless of the hazard, be extremely careful.

Danger signals an extreme hazard that will cause serious injury or death if the recommended precautions are not followed.

Warning signals a hazard that may cause serious injury or death if the recommended precautions are not followed.

Caution signals a hazard that may cause minor or moderate injury if the recommended precautions are not followed.

Two other words are also used to highlight information. *Important* calls attention to special mechanical information, and *Note* emphasizes general information worthy of special attention.

Safety

Improper use or maintenance by the operator or owner can result in injury. To reduce the potential for injury, comply with these safety instructions and always pay attention to the safety alert ⚠ symbol, which means CAUTION, WARNING, or DANGER—"personal safety instruction." Failure to comply with the instruction may result in personal injury or death.

Safe Operating Practices

This product is capable of amputating hands and feet. Always follow all safety instructions to avoid serious injury or death.

⚠ Warning ⚠

Engine exhaust contains carbon monoxide, an odorless, deadly poison that can kill you.

Do not run the engine indoors or in an enclosed area.

General Operation

- Read, understand, and follow all instructions in the operator's manual, in the video, and on the traction unit before starting. Also, read all attachment manuals where supplied
- Allow only responsible adults who are familiar with the instructions to operate the traction unit.
- Wear long pants and substantial shoes. Wearing safety glasses, safety shoes, hearing protection, and a hard hat are advisable and may be required by some local ordinances and insurance regulations.
- Ensure that the area is clear of other people before operating the traction unit. Stop the traction unit if anyone enters the area.
- Never carry passengers on attachments or on the traction unit.
- Always look down and behind before and while backing.
- Do not place your feet under the platform.
- Slow down before turning. Sharp turns on any terrain may cause loss of control.
- Never leave a running traction unit unattended. Always lower the loader arms, stop the engine, and remove the key before dismounting.

- Do not exceed the rated operating capacity, as the traction unit may become unstable which may result in loss of control.
- Do not carry a load with the arms raised. Always carry loads close to the ground. Do not step off of the platform with the load raised.
- Do not over-load the attachment and always keep the load level when raising the loader arms. Logs, boards, and other items could roll down the loader arms, injuring you.
- Never jerk the control levers; use a steady motion.
- Keep your hands, feet, hair, and loose clothing away from any moving parts.
- Operate only in daylight or good artificial light.
- Do not operate the traction unit while under the influence of alcohol or drugs.
- Watch for traffic when operating near or crossing roadways.
- Use extra care when loading or unloading the traction unit onto a trailer or truck.
- Do not touch parts which may be hot from operation. Allow them to cool before attempting to maintain, adjust, or service.
- Do not operate the traction unit with any of the covers or guards removed.
- Check for overhead clearances (i.e. branches, doorways, electrical wires) before driving under any objects and do not contact them.
- Before digging, have the area marked for underground utilities, and do not dig in marked areas.

Slope Operation

Slopes are a major factor related to loss-of-control and tip-over accidents which can result in severe injury or death. All slopes require extra caution.

- Do not operate the traction unit on hillsides or slopes exceeding the angles recommended in the Stability Data section, page 11, and those in the attachment operator's manual. See also the slope chart on page 6.
- **Operate up and down slopes with the heavy end of the traction unit uphill.** Weight distribution changes. An empty bucket will make the rear of the traction unit the heavy end, and a full bucket will make the front of the traction unit the heavy end. Most other attachments will make the front of traction unit the heavy end.
- Raising the loader arms on a slope will affect the stability of the machine. Whenever possible, keep the loader arms in the lowered position when on slopes.
- Removing an attachment on a slope will make the rear of the traction unit heavy. Refer to the Stability Data section, page 11, to determine whether the attachment can be safely removed on the slope.
- Remove obstacles such as rocks, tree limbs, etc. from the work area. Watch for holes, ruts, or bumps, as uneven terrain could overturn the traction unit. Tall grass can hide obstacles.
- Use slow speed on slopes. Before starting the engine, put the pump selector lever in the slow (turtle) position so that you will not have to stop or shift while on the slope.
- Follow the recommendations in the attachment manuals for the use of counterweights to improve stability.
- Use only Toro approved attachments. Attachments can change the stability and the operating characteristics of the traction unit. Warranty may be voided if used with unapproved attachments.
- Keep all movements on slopes slow and gradual. Do not make sudden changes in speed or direction.
- Avoid starting or stopping on a slope. If tires lose traction, proceed slowly, straight down the slope.
- Avoid turning on slopes. If you must turn, turn slowly and keep the heavy end of the traction unit uphill.
- Do not operate near drop-offs, ditches, or embankments. The traction unit could suddenly turn over if a wheel goes over the edge of a cliff or ditch, or if an edge caves in.
- Do not operate on wet grass. Reduced traction could cause sliding.
- Do not park the traction unit on a hillside or slope without lowering the attachment to the ground and chocking the wheels.
- Do not try to stabilize the traction unit by putting your foot on the ground.

Children

Tragic accidents can occur if the operator is not alert to the presence of children. Children are often attracted to the traction unit and the work activity. Never assume that children will remain where you last saw them.

- Keep children out of the work area and under the watchful care of another responsible adult.
- Be alert and turn the traction unit off if children enter the area.

- Before and while backing, look behind and down for small children.
- Never carry children. They may fall off and be seriously injured or interfere with safe traction unit operation.
- Never allow children to operate the traction unit.
- Use extra care when approaching blind corners, shrubs, trees, the end of a fence, or other objects that may obscure vision.

Service

- Stop the engine before performing any service, repairs, maintenance, or adjustments.
- If any maintenance or repair requires the loader arms to be in the raised position, secure the arms in the raised position with the hydraulic cylinder locks included with traction unit.
- Never run a traction unit inside a closed area.
- Keep nuts and bolts tight. Keep equipment in good condition.
- Never tamper with safety devices. Check safety systems for proper operation before each use.
- Keep the traction unit free of grass, leaves, or other debris build-up. Clean up oil or fuel spillage. Allow the traction unit to cool before storing.
- Use extra care when handling fuel. It is flammable and vapors are explosive.
    - Use only an approved container.
    - Never remove the fuel tank cap or add fuel when the engine is running. Allow the engine to cool before refueling. Do not smoke.
    - Never refuel the traction unit indoors.
    - Never store the traction unit or fuel container inside where there is an open flame, such as near a water heater or furnace.
    - Never fill a container while it is inside a vehicle, trunk, pick-up bed, or any surface other than the ground.
    - Keep container nozzle in contact with the tank during filling.
- Stop and inspect the equipment if you strike an object. Make any necessary repairs before restarting.
- Use only genuine replacement parts to ensure that original standards are maintained.
- Battery acid is poisonous and can cause burns. Avoid contact with skin, eyes, and clothing. Protect your face, eyes, and clothing when working with a battery.
- Battery gases can explode. Keep cigarettes, sparks and flames away from the battery.
- Keep your body and hands away from pin hole leaks or nozzles that eject high pressure hydraulic fluid. Use cardboard or paper to find hydraulic leaks. Hydraulic fluid escaping under pressure can penetrate skin and cause injury requiring surgery within a few hours by a qualified surgeon or gangrene may result.

Slope Chart

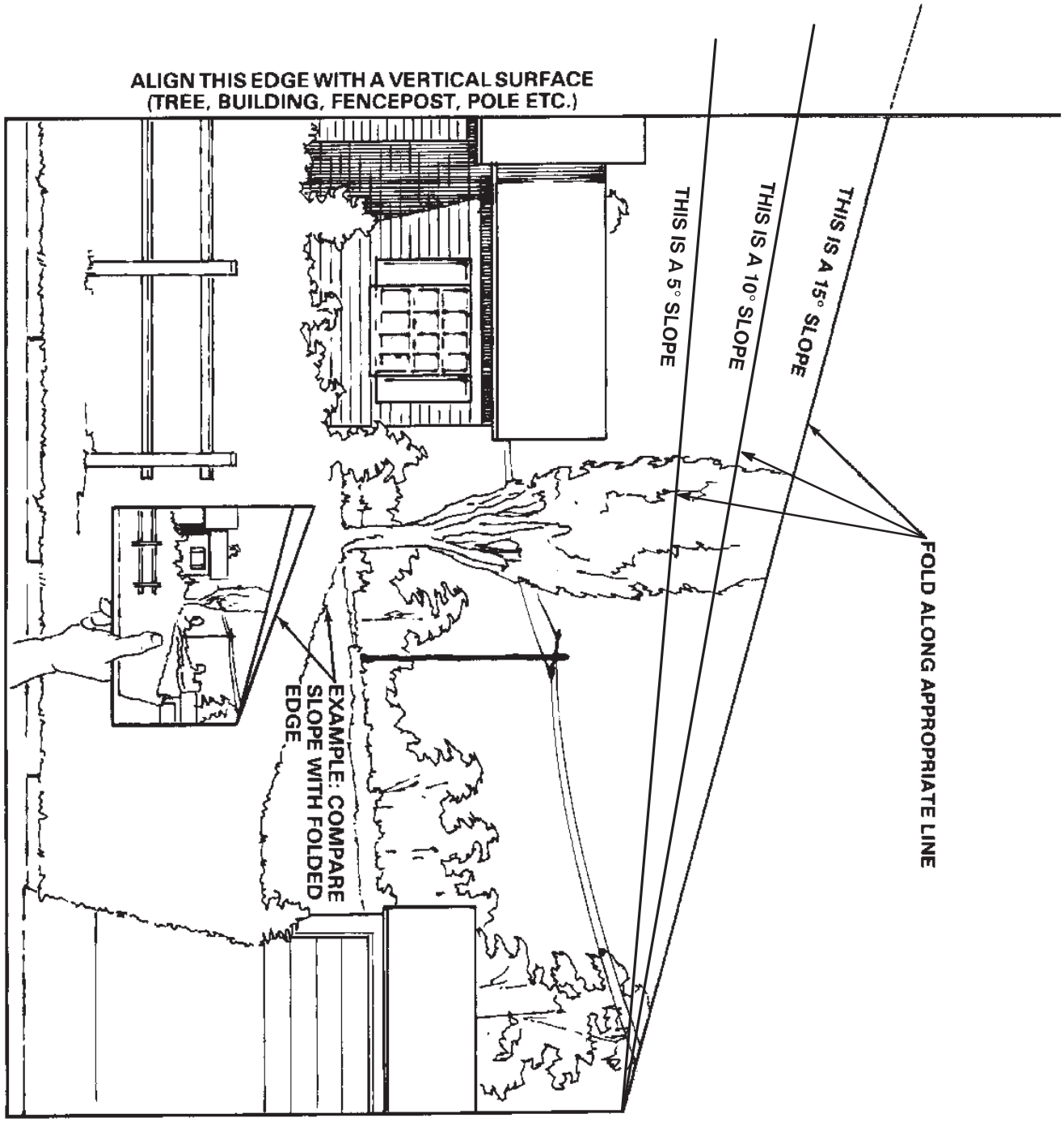
ALIGN THIS EDGE WITH A VERTICAL SURFACE
(TREE, BUILDING, FENCEPOST, POLE ETC.)
THIS IS A 5° SLOPE
THIS IS A 10° SLOPE
THIS IS A 15° SLOPE
FOLD ALONG APPROPRIATE LINE
EXAMPLE: COMPARE SLOPE WITH FOLDED EDGE

Safety and Instruction Decals

Safety decals and instructions are easily visible to the operator and are located near any area of potential danger. Replace any decal that is damaged or lost.

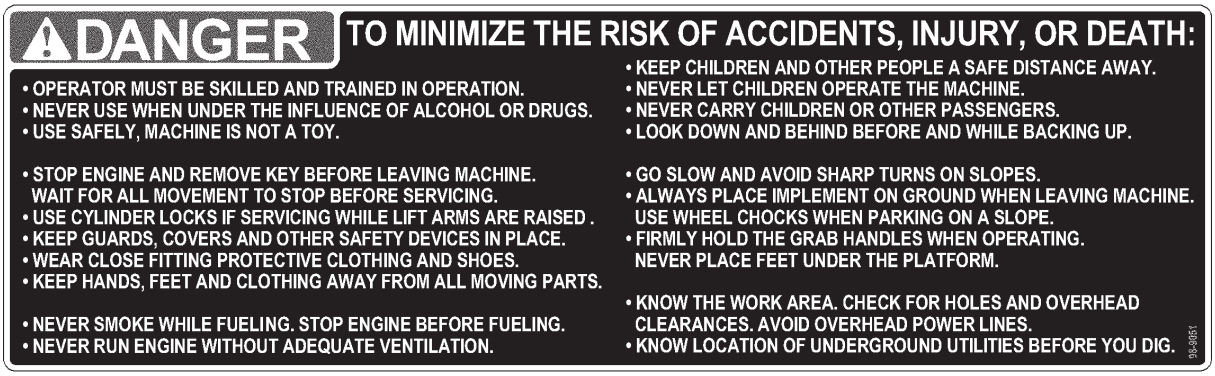

98-9051

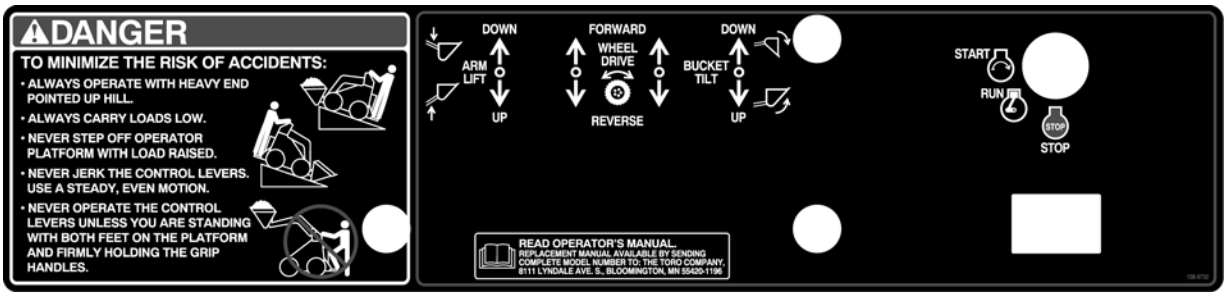

108-9732



93-6680



98-8220



105-8432

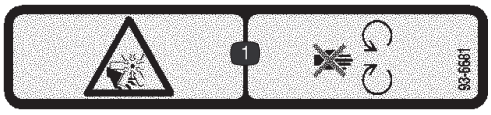

93-6681

1. Cutting/dismembermenthazard, fan—stay away from moving parts.



98-4682



100-6141

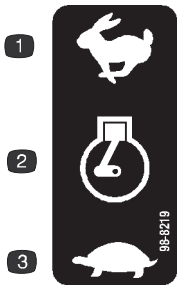

98-8219

1. Fast
2. Throttle
3. Slow

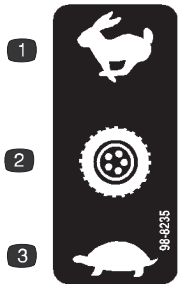

98-8235

1. Fast
2. Traction drive
3. Slow

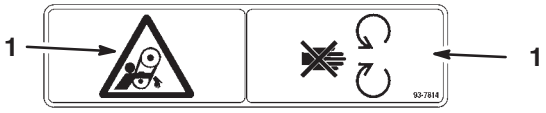

93-7814

1. Entanglement hazard—stay away from moving parts



93-9084

1. Lift point
2. Tie-down point



98-4677

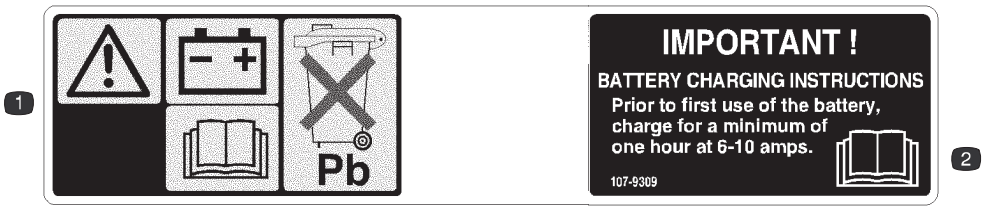

107-9309

1. Warning—read the *Operator's Manual* for information on charging the battery; contains lead; do not discard.
2. Read the *Operator's Manual.*



100–9979

1. No fire, open flames, or smoking.
2. Wear eye protection
3. Keep bystanders a safe distance from the battery.
4. Caustic liquid/chemical burn hazard
5. Read the *Operator's Manual.*
6. Explosion hazard
7. Contains lead; do not discard.
8. Recycle
9. Wear eye protection; explosive gases can cause blindness and other injuries
10. No sparks, flame, or smoking
11. Sulfuric acid can cause blindness or severe burns.
12. Flush eyes immediately with water and get medical help fast.

Assembly

Note: Determine the left and right side of the machine from the normal operating position.

Loose Parts

Note: Use the chart below to verify that all parts have been shipped.

Description	Qty.	Use
Valve Lever	1	Install the valve lever
Key	2	Start engine
Hydraulic oil filter	1	Break-in oil change

Installing the Valve Lever

1. Remove and discard the nut securing the bolt and washer to the speed selector lever.
2. Secure the lever to the speed selector valve using the bolt and washer as illustrated in Figure 2.

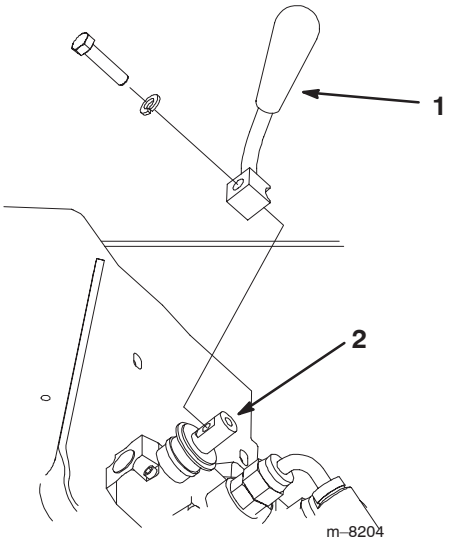

Figure 2

1. Speed selector lever
2. Speed selector valve

Charging and Connecting the Battery

Warning

CALIFORNIA

Proposition 65 Warning

Battery posts, terminals, and related accessories contain lead and lead compounds, chemicals known to the State of California to cause cancer and reproductive harm. ***Wash hands after handling*****.**

Warning

Battery terminals or metal tools could short against metal components, causing sparks. Sparks can cause the battery gasses to explode, resulting in personal injury.

- **When removing or installing the battery, do not allow the battery terminals to touch any metal parts of the traction unit.**
- **Do not allow metal tools to short between the battery terminals and metal parts of the traction unit.**

1. Remove the 4 bolts securing the battery cover and remove it from over the battery.
2. Remove the rear access cover; refer to Removing the Rear Access Cover, page 24.
3. Remove and discard the plastic cap from the negative battery terminal.
4. Connect a charger to the battery (Fig. 3) and charge it for a minimum of 1 hour at 6 to 10 amps. Do not overcharge the battery.

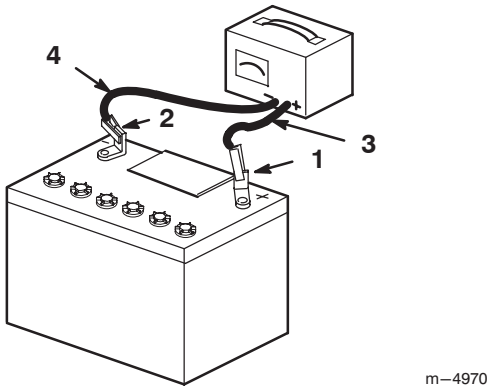

Figure 3

1. Positive Battery Post
2. Negative Battery Post
3. Red (+) Charger Lead
4. Black (–) Charger Lead

Warning

Charging the battery produces gasses that can explode.

Never smoke near the battery and keep sparks and flames away from battery.

5. When the battery is fully charged, unplug the charger from the electrical outlet, then disconnect the charger leads from the battery posts (Fig. 3).

6. Cut the tie securing the loose end of the negative battery cable to the frame. The cable is located to the right of the engine and is routed forward and tied to the frame at the factory.

7. Route the negative battery cable from the engine compartment to the battery and secure it to the negative battery terminal.

8. Install the battery cover and rear access cover.

Specifications

Overall width	40.5 in. (103 cm)
Overall length	60 in. (152 cm)
Overall height	49 in. (125 cm)
Weight	1722 lb. (783 kg)
Rated operating capacity (with 200 lb operator and std. bucket)	524 lb. (238 kg)
Tipping capacity (with 200 lb operator and st. bucket)	l048 lb. (476 kg)
Wheelbase	28 in. (71 cm)
Dump height (with std. bucket)	47 in. (119 cm)
Reach—fully raised (with std. bucket)	26 in. (66 cm)
Height to hinge pin (std bucket in highest position)	66 in. (168 cm)

Specifications and design are subject to change without notice.

Attachments

Many attachments are available for use with the traction unit. These attachments allow you to perform many different functions with the traction unit such as hauling materials, digging holes, grading, and more. Contact your Toro dealer for a list of all approved attachments and accessories.

Important Use only Toro approved attachments.

Stability Data

The following table lists the maximum slope recommended for the traction unit in the positions listed in the table. Slopes over the listed degree may cause the traction unit to become unstable. The data in the table assumes that the loader arms are fully lowered and that the factory installed tires are on the traction unit, inflated to the recommended pressure; raised arms and other tire types or pressure may affect the stability.

Configuration	Maximum Recommended Slope when Operating with: Front Uphill	Rear Uphill	Side Uphill
Traction unit without attachment	7°	20°	17°
Traction unit with counterweight, without attachment	5°	21°	17°
Traction unit with an attachment rated with one of the following stability ratings for each slope position:*			
A	25°	25°	20°
B	18°	19°	18°

Configuration	Maximum Recommended Slope when Operating with: Front Uphill 	Rear Uphill 	Side Uphill 
C	15°	16°	14°
D	10°	10°	9°
E	5°	5°	5°

* In each attachment manual is a set of three stability ratings, one for each hill position. To determine the maximum slope you can traverse with the attachment installed, find the degree of slope that corresponds to the stabilities ratings of the attachment.

Example: If the attachment installed on the traction unit has a Front Uphill rating of B, a Rear Uphill rating of D, and a Side Uphill rating of C, then you could drive forward up an 18° slope, rearward up a 10° slope, or sideways on a 14° slope, as listed in the above table.

Before Operating

Before operating, check the fuel and oil level, remove debris from the traction unit, and check the tire pressure. Also, ensure that the area is clear of people and debris. You should also know and have marked the locations of all utility lines.

Adding Fuel

Danger

In certain conditions, fuel is flammable and explosive. A fire or explosion can burn you and others and can damage property.

- **Fill the fuel tank outdoors, in an open area, when the engine is cold. Wipe up any fuel that spills.**
- **Do not fill the fuel tank completely full. Add fuel to the fuel tank until the level is 1/4 to 1/2 in. (6 to 13 mm) below the bottom of the filler neck. This empty space in the tank allows fuel to expand.**
- **Never smoke when handling fuel, and stay away from an open flame or where fuel fumes may be ignited by a spark.**
- **Store fuel in an approved container and keep it out of the reach of children. Never buy more than a 30-day supply.**

The engine runs on clean, fresh diesel fuel with a minimum cetane rating of 40. Purchase fuel in quantities that can be used within 30 days to ensure fuel freshness.

Use summer grade diesel fuel (No. 2-D) at temperatures above 20° F (–7° C) and winter grade diesel fuel (No. 1-D or No. 1-D/2-D blend) below 20° F (–7° C). Use of winter grade diesel fuel at lower temperatures provides lower flash point and pour point characteristics, allowing easier starts and lessening the chances of chemical separation of the fuel due to lower temperatures.

Use of summer grade diesel fuel above 20° F (–7° C) will contribute toward longer life of the fuel pump components.

Important Do not use kerosene or gasoline in place of diesel fuel. Failure to observe this caution will damage the engine.

1. Park the traction unit on a level surface, lower the loader arms, and stop the engine.
2. Remove the key and allow the engine to cool.
3. Clean around the fuel tank cap and remove the cap.
4. Use a funnel and add diesel fuel to the fuel tank, until the level is 1/4 to 1/2 inch (6 mm to 13 mm) below the bottom of the filler neck.

Note: This space in the tank allows fuel to expand. Do not fill the fuel tank completely full.

5. Install the fuel tank cap securely. Wipe up any fuel that may have spilled.

If possible, fill the fuel tank after each use. This will minimize possible buildup of condensation inside the fuel tank.

Draining Water from the Fuel Filter

Drain water or other contaminants from the fuel filter daily.

1. Stop the engine and remove the key.
2. Open the rear access cover; refer to Opening the Rear Access Cover, page 24.
3. Turn the drain valve until the water runs out of the filter (Fig. 4).

Note: The fuel filter is located near the bottom of the fuel tank.

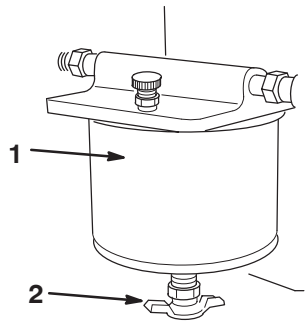

m–3708

Figure 4

1. Fuel filter
2. Drain valve

4. Close the valve.
5. Close the rear access cover.

Checking the Oil Level

1. Park the traction unit on a level surface, lower the loader arms, and stop the engine.
2. Remove the key and allow the engine to cool.
3. Open the rear access cover; refer to Opening the Rear Access Cover, page 24.
4. Clean around the oil dipstick (Fig. 5).

5. Pull out the dipstick and wipe the metal end clean (Fig. 5).
6. Slide the dipstick fully into the dipstick tube (Fig. 5).
7. Pull the dipstick out and look at the metal end.
8. If the oil level is low, clean around the oil filler cap and remove the cap (Fig. 5).
9. Slowly pour only enough oil into the valve cover to raise the level to the upper mark/hole.

Important If you overfill the crankcase with oil, the excess oil may damage the engine.

10. Replace the filler cap and dipstick.

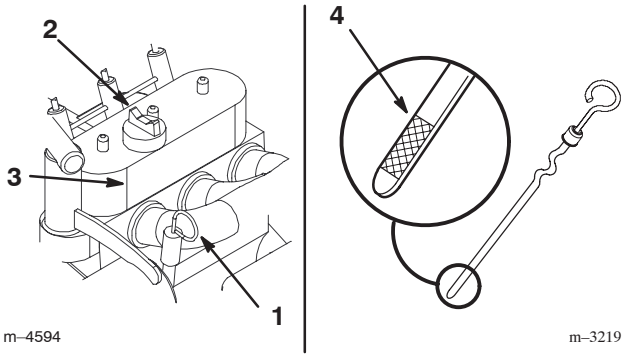

Figure 5

1. Oil dipstick
2. Filler cap
3. Valve cover
4. Metal end

11. Close the rear access cover.

Checking the Cooling System

The cooling system is filled with a 50/50 solution of water and permanent ethylene glycol anti-freeze. Check the level of coolant at the beginning of each day, before starting the engine.

Warning

If the engine has been running, the coolant in the radiator will be hot and pressurized. If you remove the cap, it may spray out, causing severe burns.

- **Do not remove the radiator cap to check coolant levels.**
- **Do not remove the radiator cap when the engine is hot. Allow the engine to cool for at least 15 minutes or until the radiator cap is cool enough to touch without burning your hand.**

1. Park the traction unit on a level surface, lower the loader arms, and stop the engine. Remove the key.
2. Allow the engine to cool.
3. Remove the radiator filler cap and check the coolant level (Fig. 6). The coolant should be up to filler neck.
4. If coolant level is low, replenish the system.

Important Do not over fill the radiator.

5. Replace the radiator filler cap, ensuring that it is tightly sealed.

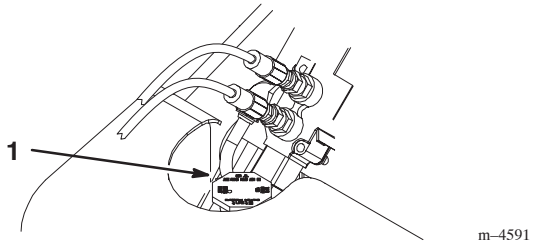

Figure 6

1. Filler Cap

Removing Debris from the Traction Unit

Important Operating the engine with a blocked radiator, may result in engine damage from overheating.

1. Park the traction unit on a level surface, raise the loader arms, and install the cylinder locks; refer to Using the Cylinder Locks, page 20.
2. Stop the engine and remove the key.
3. Remove the front access cover, refer to Removing the Front Access Cover, page 24.
4. Clean any debris from the grill.
5. Open the rear access cover; refer to Opening the Rear Access Cover, page 24.
6. Wipe away debris from the air cleaner.
7. Clean any debris build-up on the engine with a brush or blower before each use.

Important It is preferable to blow dirt out, rather than washing it out. If water is used, keep it away from electrical items and hydraulic valves. Do not use a high-pressure washer. High-pressure washing can damage the electrical system and hydraulic valves or deplete grease.

8. Replace and secure the front and rear access covers.
9. Remove and store the cylinder locks (refer to Using the Cylinder Locks, page 20), and lower the loader arms.

Checking the Hydraulic Fluid

Check the hydraulic fluid level before the engine is first started and after every 25 operating hours.

Hydraulic Tank Capacity: 17.25 gal. (67 l)

Use 10W-30 or 15W-40 detergent, diesel engine oil (API service CH-4 or higher).

1. Remove the attachment, if one is installed; refer to Removing an Attachment, page 22.
2. Park the traction unit on a level surface, raise the loader arms, and install the cylinder locks; refer to Using the Cylinder Locks, page 20.
3. Stop the engine and remove the key.
4. Remove the front access cover, refer to Removing the Front Access Cover, page 24.
5. Clean the area around the filler neck of the hydraulic tank (Fig. 7).
6. Remove the cap from the filler neck and check the fluid level on the dipstick (Fig. 7).

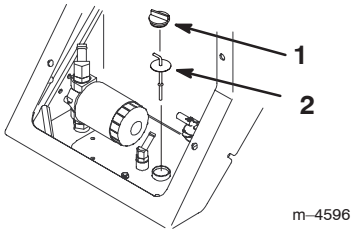

Figure 7

1. Filler neck cap
2. Dipstick

7. If the level is low, add enough fluid to raise it to the proper level.
8. Install the cap on the filler neck.
9. Install the front access cover.
10. Remove and store the cylinder locks (refer to Using the Cylinder Locks, page 20) and lower the loader arms.

Tire pressure

Maintain the air pressure in the tires as specified. Check the tires when they are cold to get the most accurate reading.

Pressure: 15–20 psi (103–138 kPa)

Note: Use a lower tire pressure (15 psi/ 103 kPa) when operating in sandy soil conditions to provide better traction in the loose soil.

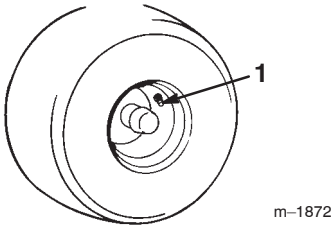

Figure 8

1. Valve stem

Operation

Traction Unit Overview

Note: Determine the left and right side of the machine from the normal operating position.

Figure 9 contains a front and back view of the traction unit. Familiarize yourself with all of the traction unit components listed in Figure 9.

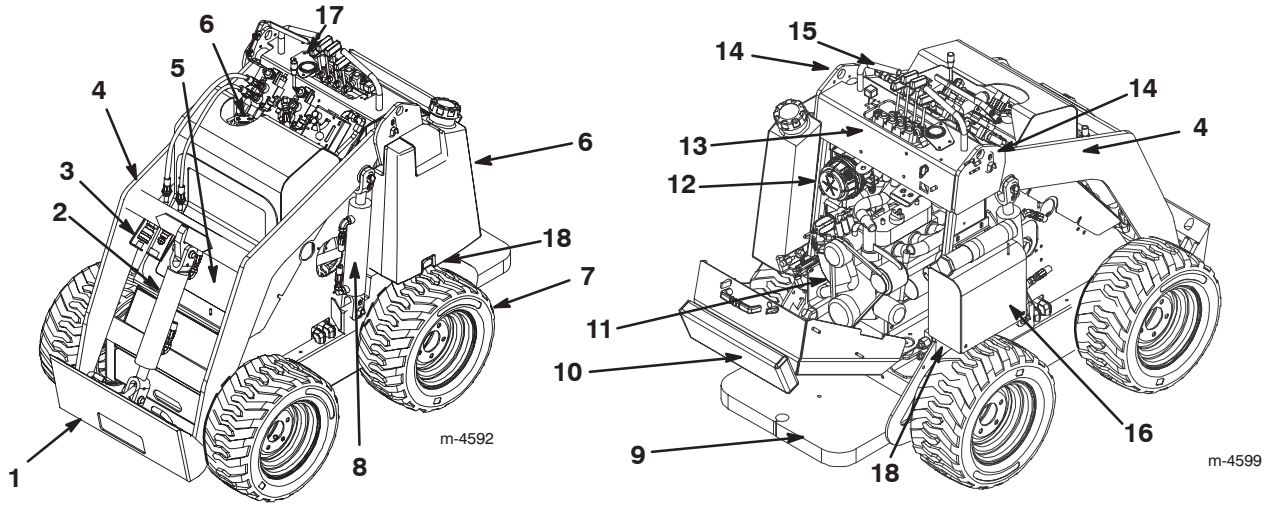

Figure 9

1. Mount plate
2. Tilt cylinder
3. Auxiliary hydraulic couplers
4. Loader arms
5. Front access cover
6. Fuel tank
7. Wheel
8. Lift cylinder
9. Operator platform
10. Rear access cover (open)
11. Engine
12. Air filter
13. Control panel
14. Lift points
15. Handle
16. Battery
17. Indicator lights
18. Tow valves

Caution

You could fall off of the platform and be seriously injured during operation.

Do not move the control levers unless you are standing with both feet on the platform and your hands are holding the handles.

Caution

If you operate the traction unit with out the covers or guards in place, you could be seriously injured by moving parts.

Do not operate the traction unit with any of the covers or guards opened or removed.

Controls

Become familiar with all the controls (Fig. 10) before you start the engine and operate the traction unit.

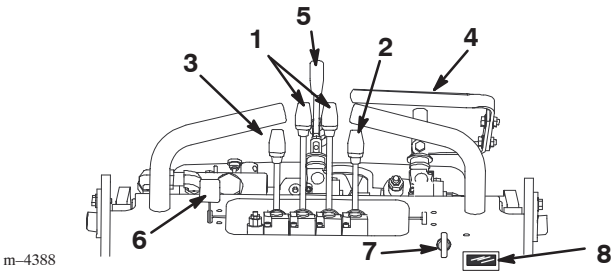

Figure 10

1. Traction control levers
2. Attachment tilt lever
3. Loader arm lever
4. Auxiliary hydraulics lever
5. Speed selector lever
6. Throttle lever
7. Key switch
8. Hour meter

Key Switch

The key switch, used to start and stop the engine, has three positions: stop, run, and start.

To start the engine, rotate the key to the start position. Release the key when engine starts and it will move automatically to the run position.

To stop the engine, rotate the key to the stop position.

Throttle Lever

Move the control forward to increase the engine speed and rearward to decrease speed.

Traction Control Levers

To move forward, move the traction control levers forward. To move rearward, move the traction control levers rearward.

To go straight, move both traction control levers equally.

To turn, move the lever located on the side you want to turn back toward the neutral position while keeping the other lever engaged.

The farther you move the traction control levers in either direction, the faster the traction unit will move in that direction.

To slow or stop, move the traction control levers to neutral.

Attachment Tilt Lever

To tilt the attachment forward, slowly push the attachment tilt lever forward.

To tilt the attachment rearward, slowly pull the attachment tilt lever rearward.

Loader Arm Lever

To lower the loader arms, slowly push the loader arm lever forward.

To raise the loader arms, slowly pull the loader arm lever rearward.

Auxiliary Hydraulics Lever

To operate a hydraulic attachment in forward direction, slowly pull the auxiliary hydraulics lever rearward.

To operate a hydraulic attachment in reverse direction, slowly push the auxiliary hydraulics lever forward. This is also called the detent position because it does not require operator presence.

Speed Selector Lever

Move the speed selector lever to the fast (rabbit) position to set the traction drive, loader arms, and attachment tilt to high speed and the auxiliary hydraulics to low speed.

Move the speed selector lever to the slow (turtle) position to set the auxiliary hydraulics to high speed and the traction drive, loader arms, and attachment tilt to low speed.

Warning

If you move the speed selector lever while the traction unit is in motion, the traction unit will either stop suddenly or accelerate quickly. If you operate the traction unit with the speed selector lever in an intermediate position, the traction unit will operate erratically and may be damaged. You could lose control of the traction unit and injure bystanders or yourself.

- **Do not move the speed selector lever when the traction unit is in motion.**
- **Do not operate the traction unit when the speed selector is in any intermediate position (i.e., any position other than fully forward or fully rearward).**

Hour Meter

The hour meter displays the number of hours of operation that have been logged on the traction unit.

After 50 hours and every 75 hours thereafter (that is at 50, 125, 200, etc.) the hour meter displays SVC on the lower left side of the screen to remind you to change the oil and perform the required maintenance. After every 400 hours (400, 800, 1200, etc.), the hour meter displays SVC on the lower right side of the screen to remind you to perform the maintenance procedures based on a 400 hour schedule. These reminders come on starting three hours prior to the service interval time and flash at regular intervals for six hours.

Flow Divider Control

The traction unit hydraulics (i.e., the traction drive, loader arms, and attachment tilt) work on a separate hydraulic circuit from the auxiliary hydraulics for powering attachments; however, the two systems share the same hydraulic pumps. Using the flow divider control (Fig. 11), you can vary the speed of the traction unit hydraulics by diverting hydraulic flow to the auxiliary hydraulics circuit. The flow divider allows you to divide the flow of fluid in varying degrees to slow the traction unit. Thus, the more hydraulic flow you divert to the auxiliary hydraulics, the slower the traction unit hydraulics will move.

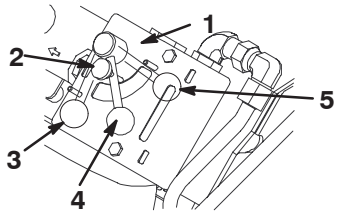

Figure 11

1. Flow divider control
2. Knob
3. 12 o'clock position
4. 10 to 11 o'clock position
5. 9 o'clock position

- Move the flow divider control to the twelve o'clock position to provide maximum speed to the traction unit hydraulics.

  Use this setting for fast operation of the traction unit.

- Move the flow divider control between the twelve o'clock and nine o'clock positions to slow the traction unit hydraulics and fine tune the speed.

  Use a setting in this range with attachments with hydraulics where you need to both run the attachment and move the traction unit hydraulics, such as the auger, boring unit, hydraulic blade, and tiller.

- Move the control to the nine o'clock position to transfer all hydraulic flow to the auxiliary hydraulics of the attachment.

  In this setting, the traction unit hydraulics will not work. Use this setting with hydraulic attachments that do not required the traction unit hydraulics. There are currently no attachments that require the nine o'clock position; however, the trencher does work best if you set it close to nine o'clock so that the traction unit will creep slowly when trenching.

Note: The flow divider control can be fixed in place by turning the knob on the control clockwise until it contacts the dial (Fig. 11).

Indicator Lights

The indicator lights warn you in the case of a system malfunction and, in the case of the glow plug light, indicate that the glow plugs are on. Figure 12 illustrates the four indicator lights.

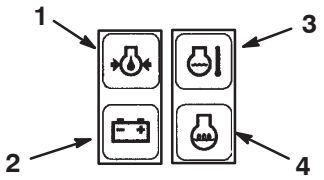

m–4603

Figure 12

1. Oil pressure light
2. Battery light
3. Engine temperature light
4. Glow plug light

Engine Temperature Light

If the engine temperature light is on, the engine is overheating. Stop the engine and allow the traction unit to cool down. Check the coolant level and the belts to the fan and water pump. Fill the coolant as required and replace any worn or slipping belts. If the problem persists, contact your Authorized Toro Dealer for diagnostics and repair.

Oil Pressure Light

This light is on for a few seconds whenever you start the engine. If the oil pressure light is on while the engine is running, the engine oil pressure is low. Stop the engine and allow the traction unit to cool down. Check the oil level and fill the crankcase with oil as needed. If the problem persists, contact your Authorized Toro Dealer for diagnostics and repair.

Battery Light

This light is on for a few seconds whenever you start the engine. If the battery light is on while the engine is running, the alternator, battery, or electrical system is broken. Contact your Authorized Toro Dealer for diagnostics and repair.

Glow Plug Light

This light is on when the key is turned to run before starting the engine. The glow plug light will remain on for up to 10 seconds, indicating that the glow plugs are warming the engine. If the glow plug light is on while the engine is running, the glow plugs are broken. Contact your Authorized Toro Dealer for diagnostics and repair.

Starting and Stopping the Engine

Starting the Engine

Important Do not use ether or starting fluid to start the engine; severe engine damage may occur.

1. Stand on the platform.
2. Move the auxiliary hydraulics valve lever to neutral.
3. Move the throttle lever midway between slow (turtle) and fast (rabbit) positions.
4. Insert the key into the ignition and turn it to the run position.

Note: The battery, oil pressure, and glow plug lights will come on.

5. When the glow plug light turns off, turn the key to the start position. When the engine starts, release the key.

Note: A warm or hot engine may be started without waiting for the light to turn off.

Important Do not engage the starter for more than 10 seconds at a time. If the engine fails to start, allow a 30 second cool-down period between attempts. Failure to follow these instructions can burn out the starter motor.

6. Move the throttle lever to the desired setting.

Important If the engine is run at high speeds when the hydraulic system is cold (i.e., when the ambient air temperature is around freezing or lower), hydraulic system damage could occur. When starting the engine in cold conditions, allow the engine to run in the middle throttle position for 2 to 5 minutes before moving the throttle to fast (rabbit).

Stopping the Engine

1. Move the throttle lever to the slow (turtle) position.
2. Lower the loader arms to the ground.
3. Turn the ignition key to the stop position.

Note: If the engine has been working hard or is hot, let it idle for a minute before stopping it. This helps to cool the engine. In an emergency, the engine may be stopped immediately.

Driving Forward or Backward

The throttle control regulates the engine speed. Place the throttle lever in the fast (rabbit) position for best performance.

Note: Throttle position can be utilized to operate at slower speeds.

To drive the traction unit, complete the following actions as necessary:

- To move forward, move the traction control levers forward.
- To move rearward, move the traction control levers rearward.
- To go straight, move both traction control levers equally.
- To turn, move the lever located on the side you want to turn toward the neutral position while keeping the other lever engaged.
- To slow or stop, move the traction control levers to neutral.

Note: The farther you move the traction control levers in either direction, the faster the traction unit will move in that direction.

Stopping the Traction Unit

To stop the traction unit, move the traction control levers to neutral and the throttle lever to slow (turtle), lower loader arms to the ground, and turn the ignition key off to stop the engine. Remove the key.

Caution

A child or untrained bystander could attempt to operate the traction unit and be injured.

Remove the key from the switch when leaving the traction unit, even if just for a few seconds.

Moving a Non-functioning Traction Unit

Important Do not tow or pull the traction unit without first opening the tow valves, or the hydraulic system will be damaged

1. Stop the engine.
2. Remove the plug covering each tow valve (Fig. 13).

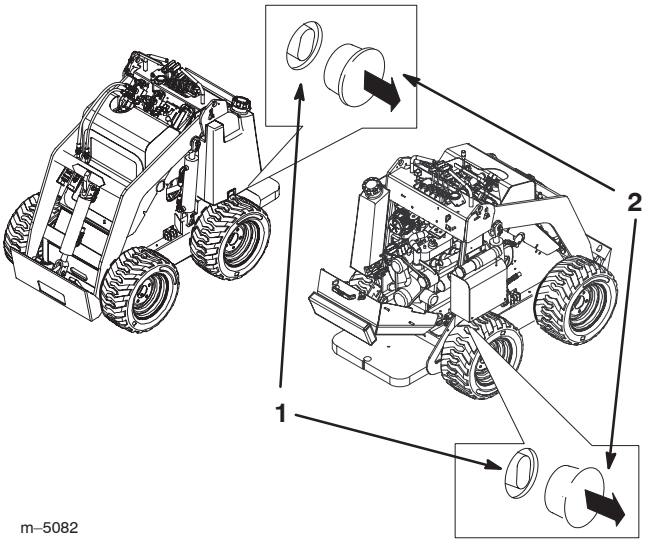

Figure 13

1. Tow valve
2. Plug

3. Loosen the jam nut on each tow valve (Fig. 13).
4. Turn the valves counter-clockwise one turn with a hex wrench to open them.
5. Tow the traction unit as required.

Important Do not exceed 3 MPH when towing.

6. When the traction unit has been repaired, close the tow valves and tighten the jam nuts.

Important Do not overtighten the tow valves.

7. Replace the plugs.

Using the Cylinder Locks

Warning

The loader arms may lower when in the raised position crushing anyone under them.

Install the cylinder locks before performing maintenance that requires raised loader arms.

Installing the Cylinder Locks

1. Start the engine.
2. Raise the loader arms to the fully raised position.
3. Stop the engine.
4. Position a loader arm cylinder lock over each lift cylinder rod (Fig. 14).
5. Secure each loader arm cylinder lock with a clevis pin and cotter pin (Fig. 14).

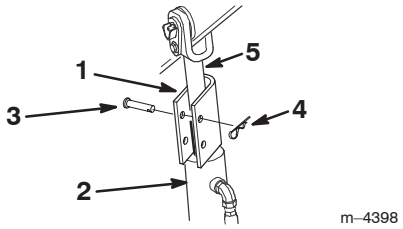

Figure 14

1. Cylinder lock
2. Lift cylinder
3. Hairpin cotter
4. Clevis pin
5. Lift cylinder rod

6. With the engine off, lower the loader arms.

Removing/Storing the Cylinder Locks

1. Start the engine.
2. Raise the loader arms to the fully raised position.
3. Stop the engine.
4. Remove the clevis pin and cotter pin securing each cylinder lock.
5. Remove the cylinder locks.
6. Lower the loader arms.

7. Install the cylinder locks over the hydraulic hoses and secure them with the clevis pins and cotter pins (Fig. 15).

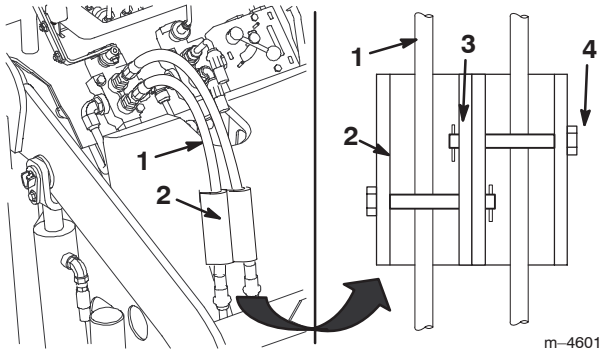

Figure 15

1. Hydraulic hoses
2. Cylinder locks
3. Hairpin cotter
4. Clevis pin

Installing and Removing Attachments

Connecting an Attachment

Important Use only Toro-approved attachments. Attachments can change the stability and the operating characteristics of the traction unit. The warranty of the traction unit may be voided if used with unapproved attachments.

Important Before installing the attachment, ensure that the mount plates are free of any dirt or debris and that the pins rotate freely. If the pins do not rotate freely, grease them; refer to Greasing the Traction Unit, page 24.

1. Position the attachment on a level surface with enough space behind it to accommodate the traction unit.
2. Start the engine.
3. Tilt the attachment mount plate forward.
4. Position mount plate into the upper lip of the attachment receiver plate (Fig. 16).

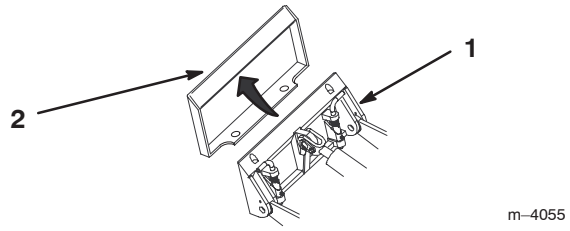

Figure 16

1. Mount plate
2. Receiver plate

5. Raise the loader arms while tilting back the mount plate at the same time.

Important **The attachment should be raised enough to clear the ground, and the mount plate should be tilted all the way back.**

6. Stop the engine.
7. Engage the quick attach pins, ensuring that they are fully seated in the mount plate (Fig. 17).

Important If the pins do not rotate to the engaged position, the mount plate is not fully aligned with the holes in the attachment receiver plate. Check the receiver plate and clean it if necessary.

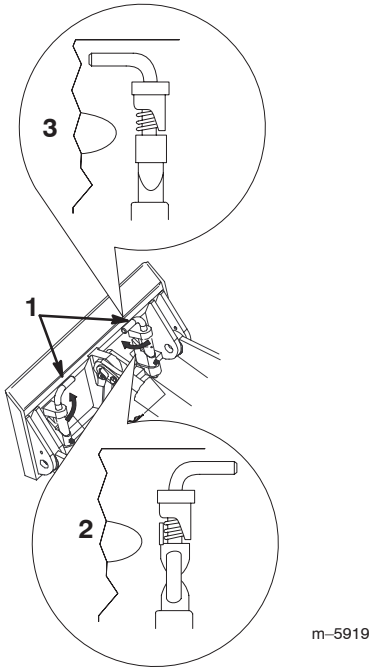

Figure 17

1. Quick attach pins (shown in engaged position)
2. Disengaged position
3. Engaged position

Warning

If you do not fully seat the quick attach pins through the attachment mount plate, the attachment could fall off of the traction unit, crushing you or bystanders.

Ensure that your quick attach pins are fully seated in the attachment mount plate.

1. Position the attachment on a level surface with enough space behind it to accommodate the traction unit.
2. Move the pump control lever to the turtle position.

Connecting the Hydraulic Hoses

If the attachment requires hydraulics for operation, connect the hydraulic hoses as follows:

1. Stop the engine.
2. Move the auxiliary hydraulics lever forward, backward, and back to neutral to relieve pressure at the hydraulic couplers.
3. Push the auxiliary hydraulics lever forward into the detent position.
4. Remove the protective covers from the hydraulic couplers on the traction unit.
5. Ensure that all foreign matter is cleaned from the hydraulic connectors.
6. Push the attachment male connector into the female connector on the traction unit.

Note: When you connect the attachment male connector first, you will relieve any pressure build up in the attachment.

Warning

Hydraulic fluid escaping under pressure can penetrate skin and cause injury. Fluid injected into the skin must be surgically removed within a few hours by a doctor familiar with this form of injury or gangrene may result.

- **Keep your body and hands away from pin hole leaks or nozzles that eject high pressure hydraulic fluid.**
- **Use cardboard or paper to find hydraulic leaks, never use your hands.**

Caution

Hydraulic couplers, hydraulic lines/valves, and hydraulic fluid may be hot. If you contact hot components you may be burned.

- **Wear gloves when operating the hydraulic couplers.**
- **Allow the traction unit to cool before touching hydraulic components.**
- **Do not touch hydraulic fluid spills.**

7. Push the attachment female connector into the male connector on the traction unit.
8. Confirm that the connection is secure by pulling on the hoses.
9. Move the auxiliary hydraulics lever to neutral.

Removing an Attachment

1. Lower the attachment to the ground
2. Stop the engine.
3. Disengage the quick attach pins by turning them to the outside.
4. If the attachment uses hydraulics, move the auxiliary hydraulics lever forward, backward, and back to neutral to relieve pressure at the hydraulic couplers.
5. If the attachment uses hydraulics, slide the collar back on the hydraulic couplers and disconnect them.

Important Connect the attachment hoses together to prevent hydraulic system contamination during storage.

6. Install the protective covers onto the hydraulic couplers on the traction unit.
7. Start the engine, tilt the mount plate forward, and back the traction unit away from the attachment.

Securing the Traction Unit for Transport

When transporting the traction unit on a trailer, always use the following procedure:

Important Do not operate or drive the traction unit on roadways.

1. Lower the loader arms.
2. Stop the engine.
3. Secure the traction unit to the trailer with chains or straps using the operator platform support openings to secure the rear of the traction unit and the loader arms/mount plate to secure the front of the traction unit.

Maintenance

Note: Determine the left and right side of the machine from the normal operating position.

Recommended Maintenance Schedule

Maintenance Service Interval	Maintenance Procedure
8 hours[3]	• Grease the traction unit • Check engine oil level • Check radiator coolant level • Check for loose fasteners • Check tire pressure (20 psi)
25 hours	• Check hydraulic oil level • Inspect hydraulic lines for leaks
75 hours	• Change engine oil[1, 2] • Check wheel lug nut torque (50 ft.-lb.)[3] • Check battery cable connections
150 hours	• Change engine oil filter (every other oil change)[1, 4] • Check engine speed (1300 rpm idle, ± 100, and 3700 full throttle, +50/–100) • Check the fan belt and alternator belt tension[1]
400 hours	• Change hydraulic filter[1, 3, 5] • Inspect fuel lines for leaks
Yearly/Storage	• Change hydraulic oil[1, 6] • Replace primary and safety air filters[1] • Replace the fuel filter[1] • Check radiator coolant protection temperature[7] • Touch up chipped paint

[1]More often in dusty, dirty conditions.
[2]Change oil after the first 50 operating hours.
[3]Change the hydraulic filter and torque the wheel lug nuts after the first 8–10 operating hours
[4]For severe duty or rental applications, change every oil change.
[5]For severe duty or rental applications, change every 200 operating hours.
[6]For severe duty or rental applications, change every 400 operating hours.
[7]Flush radiator coolant system and replace coolant every two years.

Important Refer to your engine operator's manual for additional maintenance procedures.

Note: After 50 hours and every 75 hours thereafter (that is at 50, 125, 200, etc.) the hour meter displays SVC on the lower left side of the screen to remind you to change the oil and perform the required maintenance. After every 400 hours (400, 800, 1200, etc.), the hour meter displays SVC on the lower right side of the screen to remind you to perform the maintenance procedures based on a 400 hour schedule. These reminders come on starting three hours prior to the service interval time and flash at regular intervals for six hours.

Caution

If you leave the key in the ignition switch, someone could accidently start the engine and seriously injure you or other bystanders.

Remove the key from the ignition and disconnect the negative battery cable before you do any maintenance.

Opening the Access Covers

Removing the Front Access Cover

1. Raise the loader arms and install the cylinder locks; refer to Using the Cylinder Locks, page 20.

Note: In the case that you need to remove the front access cover without raising the loader arms, be very careful not to damage the cover or hydraulic hoses as you maneuver the cover out from under the arms.

2. Stop the engine and remove the key.
3. Release the two locking tabs (Fig. 18).
4. Pull the cover off of the traction unit (Fig. 18).

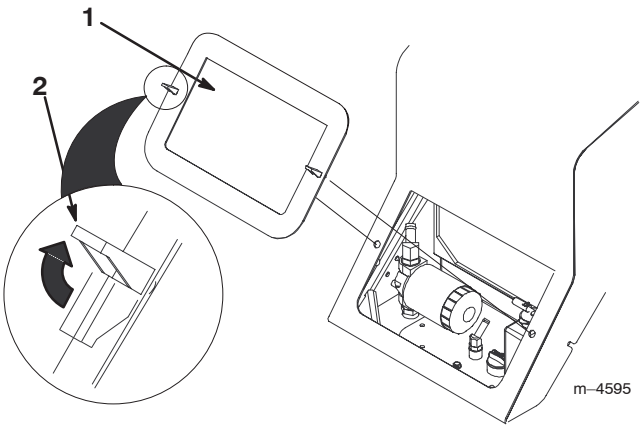

Figure 18

1. Front access cover
2. Locking tabs

5. When finished, replace the front access cover and secure it with the two locking tabs.

Opening the Rear Access Cover

1. Stop the engine and remove the key.
2. Release the two locking tabs on top of the rear access cover (Fig. 19).
3. Grasping the handle, pull the cover up and back to swing it open (Fig. 19).

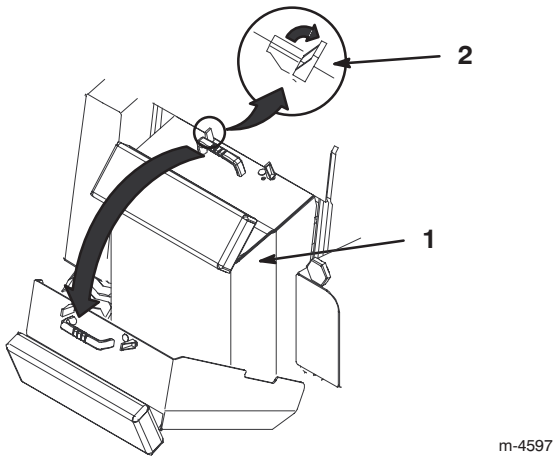

Figure 19

1. Rear access cover
2. Locking tabs

4. When finished, close the rear access cover by swinging it up and seating it in place. Secure it with the two locking tabs.

Greasing the Traction Unit

Grease all pivot joints every 8 operating hours and immediately after every washing.

Grease Type: General-purpose grease.

1. Lower the loader arms and stop the engine. Remove the key.
2. Clean the grease fittings with a rag.
3. Connect a grease gun to each fitting (Fig 20 and 21).

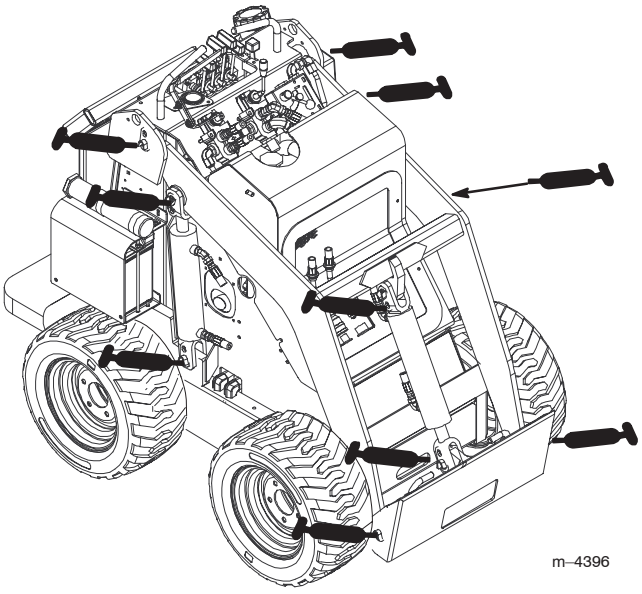

Figure 20

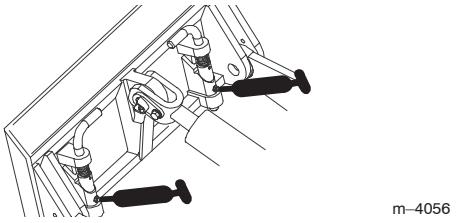

Figure 21

4. Pump grease into the fittings until grease begins to ooze out of the bearings (approximately 3 pumps).

5. Wipe up any excess grease.

Servicing the Air Cleaner

Replace the primary and safety filters yearly.

Note: Service the air cleaner more frequently if operating conditions are extremely dusty or sandy.

Removing the Filter

1. Lower the loader arms and stop the engine. Remove the key.

2. Open the rear access cover; refer to Opening the Rear Access Cover, page 24.

3. Release the latches on the air cleaner and pull the air cleaner cover off of the air cleaner body (Fig. 22).

4. Clean the inside of the air cleaner cover with compressed air.

5. Gently slide the primary filter out of the air cleaner body (Fig. 22). Avoid knocking the filter into the side of the body. Do not remove the safety filter, unless you intend to replace it as well.

6. Inspect the primary filter for damage or excessive dirt by looking into the filter while shining a bright light on the outside of the filter. Holes in the filter will appear as bright spots. If the filter is dirty or damaged, replace it with a new one.

Important Never attempt to clean the safety filter. If the safety filter is dirty, then the primary filter is damaged and you should replace both filters.

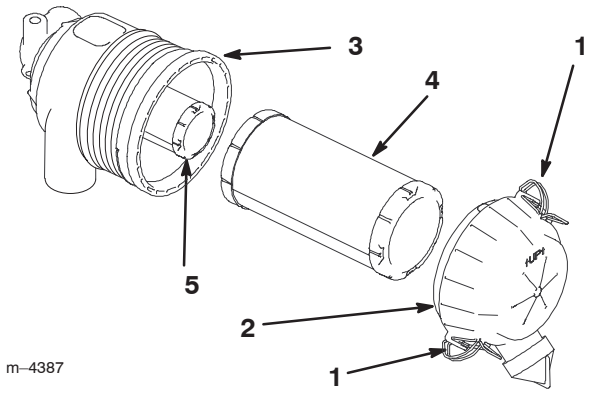

Figure 22

1. Latches
2. Air cleaner cover
3. Air filter body
4. Primary filter
5. Safety filter

Installing the Filters

1. If installing new filters, check each filter for shipping damage. Do not use a damaged filter.

2. If the safety filter is being replaced, carefully slide it into the filter body (Fig. 22).

3. Carefully slide the primary filter over the safety filter (Fig. 22). Ensure that it is fully seated by pushing on the outer rim of the filter while installing it.

Important Do not press on the soft inside of the filter.

4. Install the air cleaner cover with the side indicated as UP facing up and secure the latches (Fig. 22).

5. Close the rear access cover.

Servicing the Engine Oil

Change oil after the first 50 operating hours and then every 75 operating hours thereafter.

Note: Change oil more frequently when operating conditions are extremely dusty or sandy.

Oil Type: Diesel engine oil (API service CD or higher)

Crankcase Capacity: w/filter, 0.84 gal. (3.2 l)

Viscosity: See table below

USE THESE SAE VISCOSITY OILS

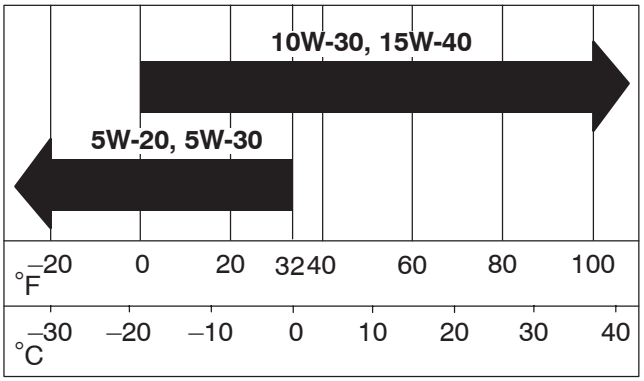

Changing the Oil

1. Start the engine and let it run for five minutes. This warms the oil so it drains better.
2. Park the traction unit so that the drain side is slightly lower than the opposite side to ensure that the oil drains completely.
3. Lower the loader arms, chock the wheels, and stop the engine. Remove the key.

Caution

Components will be hot if the traction unit has been running. If you touch hot components you may be burned.

Allow the traction unit to cool before performing maintenance or touching components under the hood.

4. Place a pan under the oil drain tube (Fig. 23).
5. Loosen the clamp and remove the plug (Fig. 23).
6. When the oil has drained completely, replace the plug and tighten the clamp.

Note: Dispose of the used oil at a certified recycling center.

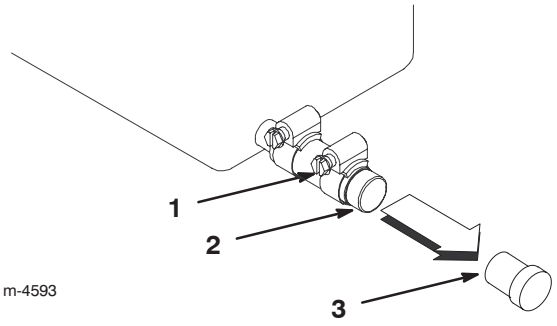

Figure 23

1. Clamp
2. Oil drain tube
3. Plug

7. Open the rear access cover; refer to Opening the Rear Access Cover, page 24.
8. Remove the oil fill cap and slowly pour approximately 80% of the specified amount of oil in through the valve cover.
9. Check the oil level; refer to Checking the Oil Level, page 13.
10. Slowly add additional oil to bring the level to the upper mark/hole on the dipstick.
11. Replace the fill cap.
12. Close the rear access cover.

Changing the Oil Filter

Replace the oil filter every 150 hours or every other oil change.

Note: Change the oil filter at each oil change when operating conditions are extremely hot, dusty, or sandy.

1. Drain the oil from the engine; refer to Changing the Oil, page 26.
2. Open the rear access cover; refer to Opening the Rear Access Cover, page 24.
3. Remove the old filter and wipe the filter adapter (Fig. 24) gasket surface.
4. Allow a minute or two for the oil to be absorbed by filter material, then pour off the excess oil.
5. Apply a thin coat of new oil to the rubber gasket on the replacement filter (Fig. 24).

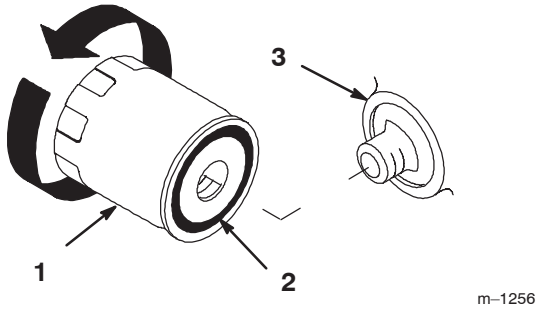

Figure 24

1. Oil filter
2. Gasket
3. Adapter

6. Install the replacement oil filter to the filter adapter. Turn the oil filter clockwise until the rubber gasket contacts the filter adapter, then tighten the filter an additional 1/2 turn (Fig. 24).

7. Fill the crankcase with the proper type of new oil; refer to Changing the Oil, page 26.

8. Close the rear access cover.

Servicing the Battery

Important The following procedures apply when servicing a (dry) battery that has replaced the original battery. The original (wet) battery does not require service.

Warning

CALIFORNIA

Proposition 65 Warning

Battery posts, terminals, and related accessories contain lead and lead compounds, chemicals known to the State of California to cause cancer and reproductive harm. ***Wash hands after handling.***

Check the electrolyte level in the battery every 100 hours. Always keep the battery clean and fully charged. Use a paper towel to clean the battery case. If the battery terminals are corroded, clean them with a solution of four parts water and one part baking soda. Apply a light coating of grease to the battery terminals to reduce corrosion.

Warning

Battery terminals or metal tools could short against metal components, causing sparks. Sparks can cause the battery gasses to explode, resulting in personal injury.

- **When removing or installing the battery, do not allow the battery terminals to touch any metal parts of the traction unit.**
- **Do not allow metal tools to short between the battery terminals and metal parts of the traction unit.**

Checking the Electrolyte Level

1. Stop the engine and remove the key.

2. Remove the 4 bolts securing the battery cover and remove it from over the battery.

3. Look at the side of the battery. The electrolyte must be up to the Upper line (Fig. 25). Do not allow the electrolyte to fall below the Lower line (Fig. 25).

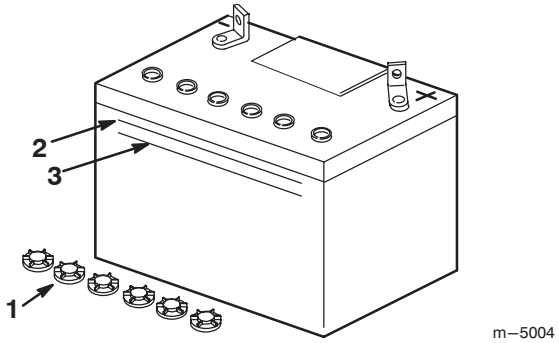

Figure 25

1. Filler caps
2. Upper line
3. Lower line

4. If the electrolyte is low, add the required amount of distilled water; refer to Adding Water to the Battery, page 28.

Danger

Battery electrolyte contains sulfuric acid which is a deadly poison and causes severe burns.

- **Do not drink electrolyte and avoid contact with skin, eyes or clothing. Wear safety glasses to shield your eyes and rubber gloves to protect your hands.**
- **Fill the battery where clean water is always available for flushing the skin.**

Adding Water to the Battery

The best time to add distilled water to the battery is just before you operate the machine. This lets the water mix thoroughly with the electrolyte solution.

1. Remove the battery from the traction unit.
2. Clean the top of the battery with a paper towel.

Important Never fill the battery with distilled water while the battery is installed in the traction unit. Electrolyte could be spilled on other parts and cause corrosion.

3. Remove the filler caps from the battery (Fig. 25).
4. Slowly pour distilled water into each battery cell until the electrolyte level is up to the Upper line (Fig. 25) on the battery case.

Important Do not overfill the battery because electrolyte (sulfuric acid) can cause severe corrosion and damage to the chassis.

5. Wait five to ten minutes after filling the battery cells. Add distilled water, if necessary, until the electrolyte level is up to the Upper line (Fig. 25) on the battery case.
6. Install the battery filler caps.

Charging the Battery

Warning

Charging the battery produces gasses that can explode.

Never smoke near the battery and keep sparks and flames away from battery.

Important Always keep the battery fully charged (1.265 specific gravity). This is especially important to prevent battery damage when the temperature is below 32°F (0°C).

1. Check the electrolyte level; refer to Checking the Electrolyte Level, page 27.
2. Make sure the filler caps are installed in the battery. Charge the battery for 10 to 15 minutes at 25 to 30 amps or 30 minutes at 4 to 6 amps. Do not overcharge the battery.
3. When the battery is fully charged, unplug the charger from the electrical outlet, then disconnect the charger leads from the battery posts (Fig. 26).

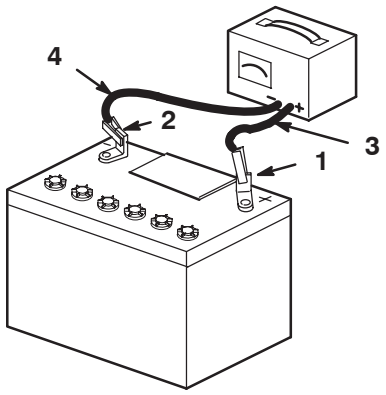

Figure 26

1. Positive battery post
2. Negative battery post
3. Red (+) charger lead
4. Black (–) charger lead

4. Replace the battery cover.

Servicing the Hydraulic System

Replacing the Hydraulic Filter

Change the hydraulic filter:

- After the first 8 operating hours.
- After every 400 operating hours.

1. Position traction unit on a level surface.
2. Raise the loader arms and install the cylinder locks; refer to Using the Cylinder Locks, page 20.
3. Stop the engine and remove the key.
4. Remove the front access cover, refer to Removing the Front Access Cover, page 24.

Important Do not substitute an automotive oil filter or severe hydraulic system damage may result.

5. Place a drain pan under the filter.
6. Remove the old filter and wipe the filter adapter, gasket surface clean.
7. Apply a thin coat hydraulic fluid to the rubber gasket on the replacement filter (Fig. 27).

8. Install the replacement hydraulic filter onto the filter adapter. Tighten it clockwise until the rubber gasket contacts the filter adapter, then tighten the filter an additional 1/2 turn (Fig. 27).

9. Clean up any spilled fluid.

10. Start the engine and let it run for about two minutes to purge air from the system.

11. Stop the engine and check for leaks.

12. Check the fluid level in the hydraulic tank (refer to Checking the Hydraulic Fluid, page 15) and add fluid to raise the level to the mark on the dipstick. Do not over fill the tank.

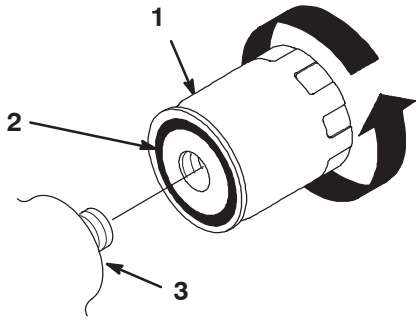

Figure 27

1. Hydraulic filter
2. Gasket
3. Adapter

13. Install the front access cover.

14. Remove and store the cylinder locks (refer to Using the Cylinder Locks, page 20) and lower the loader arms.

Changing the Hydraulic Fluid

Change the hydraulic fluid yearly.

1. Position traction unit on a level surface.

2. Raise the loader arms and install the cylinder locks; refer to Using the Cylinder Locks, page 20.

3. Stop the engine and remove the key.

4. Remove the front access cover, refer to Removing the front access cover, page 24.

Important Do not substitute automotive transmission fluid or severe hydraulic system damage may result.

5. Place a large drain pan under the traction unit that can hold at least 17 gal. (67 l).

6. Remove the drain plug from the bottom of the hydraulic tank and allow the fluid to completely drain out.

7. Install the drain plug.

8. Fill the hydraulic tank with 10W-30 or 15W-40 detergent, diesel engine oil (API service CH-4 or higher); refer to Checking the Hydraulic Fluid, page 15.

Note: Dispose of used oil at a certified recycling center.

9. Install the front access cover

10. Remove and store the cylinder locks (refer to Using the Cylinder Locks, page 20) and lower the loader arms.

Checking Hydraulic Lines

After every 25 operating hours, check the hydraulic lines and hoses for leaks, loose fittings, kinked lines, loose mounting supports, wear, weather, and chemical deterioration. Replace all moving hydraulic hoses every 1500 hours or 2 years, which ever comes first. Make necessary repairs before operating.

Warning

Hydraulic fluid escaping under pressure can penetrate skin and cause injury. Fluid injected into the skin must be surgically removed within a few hours by a doctor familiar with this form of injury or gangrene may result.

- **Keep your body and hands away from pin hole leaks or nozzles that eject high pressure hydraulic fluid.**
- **Use cardboard or paper to find hydraulic leaks, never use your hands.**

Changing the Fuel Filter

Change the fuel filter yearly. Never install a dirty filter.

1. Lower the loader arms and stop the engine. Remove the key.

2. Open the rear access cover; refer to Opening the Rear Access Cover, page 24.

3. Shut off the fuel valve on the bottom of the fuel tank (Fig. 30).

4. Open the drain valve (Fig. 28) and drain the fuel from the fuel filter into a suitable container and dispose of it properly.

5. Remove the fuel filter with a filter wrench (Fig. 28).

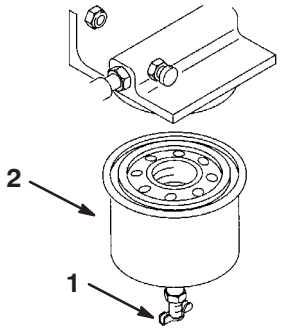

Figure 28

1. Drain valve 2. Fuel filter

6. Clean the mounting surface.
7. Lubricate the gasket on the new filter with clean engine oil. Screw on the new filter by hand until the gasket contacts the housing. Then tighten it another 1/2 turn.
8. Open the fuel valve on the bottom of the fuel tank (Fig. 30).
9. Bleed the fuel system; refer to Bleeding the Fuel System, page 30.
10. Close the rear access cover.
11. Start the engine and check for leaks.

Bleeding the Fuel System

Bleeding the air from the fuel system in any of the following situations:

- Initial start up of a new traction unit or a traction unit that has been stored.
- After the engine has ceased running due to lack of fuel.
- After maintenance has been performed on the fuel system components.

1. Open the rear access cover; refer to Opening the Rear Access Cover, page 24.
2. Place a drain pan under the fuel filter to catch spills.
3. Open the bleed screw on top of the fuel filter to fill the bowl with fuel (Fig. 29).

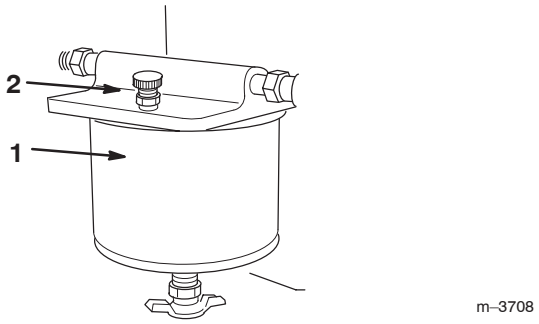

Figure 29

1. Fuel filter 2. Bleed screw

4. Close the bleed screw when fuel comes out in a steady stream.
5. On left side of the engine, locate the air vent plug on top of the fuel injection pump and connect a hose to it, leading to a drain pan.
6. Open the vent plug and crank the engine until fuel comes out a steady stream.
7. Close the vent plug.
8. Close the rear access cover.

Draining the Fuel Tank

Danger

In certain conditions, fuel is extremely flammable and highly explosive. A fire or explosion from gasoline can burn you and others and can damage property.

- **Drain fuel from the fuel tank when the engine is cold. Do this outdoors in an open area. Wipe up any spills.**
- **Never smoke when draining gasoline, and stay away from an open flame or where a spark may ignite the fumes.**

1. Park the traction unit on a level surface, to ensure that the fuel tanks drain completely.
2. Lower the loader arms and stop the engine. Remove the key.

3. Open the rear access cover; refer to Opening the Rear Access Cover, page 24.

4. Shut off the fuel valve in the hose near the bottom of the fuel tank as illustrated in Figure 30.

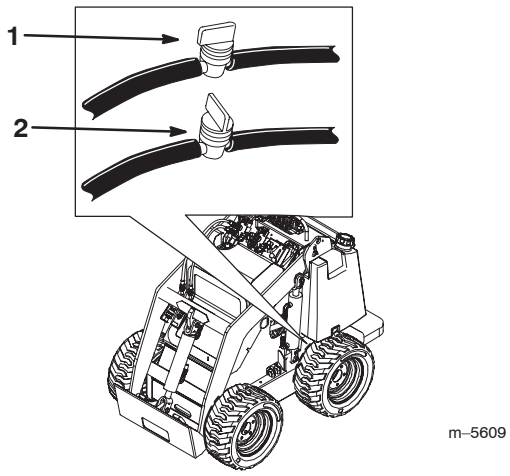

Figure 30

1. Fuel valve, open
2. Fuel valve closed

5. Loosen the hose clamp at the fuel filter and slide it up the fuel line away from the filter.

6. Pull the fuel line off of the fuel filter, open the fuel valve, and allow the fuel to drain into a fuel can or drain pan.

Note: Now is the best time to install a new fuel filter because the fuel tank is empty.

7. Install the fuel line onto the fuel filter.

8. Slide the hose clamp close to the fuel filter to secure the fuel line.

9. Open the fuel valve in the hose near the bottom of the fuel tank as illustrated in Figure 30.

10. Close the rear access cover.

Cleaning and Storage

1. Lower the loader arms and stop the engine. Remove the key.

2. Remove dirt and grime from the external parts of the entire traction unit, especially the engine. Clean dirt and chaff from the outside of the engine.

Important You can wash the traction unit with mild detergent and water. Do not pressure wash the traction unit. Avoid excessive use of water, especially near the control panel, engine, hydraulic pumps, and motors.

3. Service the air cleaner; refer to Servicing the Air Cleaner, page 25.

4. Grease the traction unit; refer to Greasing the Traction Unit, page 24.

5. Change the crankcase oil; refer to Servicing the Engine Oil, page 25.

6. Check the tire pressure; refer to Tire Pressure, page 15.

7. Charge the battery; refer to Servicing the Battery, page 27.

8. Flush the fuel tank with fresh, clean diesel fuel

9. Check and tighten all bolts, nuts, and screws. Repair or replace any part that is damaged.

10. Paint all scratched or bare metal surfaces. Paint is available from your Authorized Service Dealer.

11. Check anti-freeze protection and fill the radiator with a 50/50 solution of water and permanent ethylene glycol anti-freeze.

12. Store the traction unit in a clean, dry garage or storage area. Remove the key from the ignition switch and keep it in a memorable place.

13. Cover the traction unit to protect it and keep it clean.

Troubleshooting

Problem	Possible Causes	Corrective Action
The starter does not crank.	1. The electrical connections are corroded or loose.	1. Check the electrical connections for good contact.
	2. A fuse is blown or loose.	2. Correct or replace the fuse.
	3. The relay or switch is damaged.	3. Contact your Authorized Service Dealer.
	4. The battery is discharged.	4. Charge the battery or replace it.
	5. A damaged starter or starter solenoid.	5. Contact your Authorized Service Dealer.
	6. Seized internal engine components.	6. Contact your Authorized Service Dealer.
The engine cranks, but will not start.	1. Incorrect starting procedure.	1. Refer to Starting and Stopping the Engine, page 19.
	2. The fuel tank is empty.	2. Fill with fresh fuel.
	3. The fuel shut-off valve is closed.	3. Open the fuel shut-off valve.
	4. Dirt, water, stale fuel, or incorrect fuel is in the fuel system.	4. Drain and flush the fuel system; add fresh fuel.
	5. Clogged fuel line.	5. Clean or replace.
	6. There is air in the fuel	6. Bleed the nozzles and check for air leaks at the fuel hose connections and fittings between the fuel tank and engine.
	7. Inoperative glow plugs.	7. Check the fuse, glow plugs and wiring.

Problem	Possible Causes	Corrective Action
The engine cranks, but will not start (continued).	8. Slow cranking speed.	8. Check the battery, oil viscosity and starting motor (contact your Authorized Service Dealer).
	9. The air cleaner element is dirty.	9. Clean or replace.
	10. Low compression.	10. Contact your Authorized Service Dealer.
	11. The injection nozzles are damaged.	11. Contact your Authorized Service Dealer.
	12. The fuel filter is clogged.	12. Replace the fuel filter.
	13. The injections pump timing is incorrect.	13. Contact your Authorized Service Dealer.
	14. The injection pump is broken.	14. Contact your Authorized Service Dealer.
	15. Improper fuel grade for cold weather use.	15. Drain the fuel system and replace the fuel filter. Add fresh fuel of proper grade for ambient temperature conditions. You may need to warm the entire traction unit.
	16. The ETR solenoid is broken.	16. Contact your Authorized Service Dealer.
The engine starts, but does not keep running.	1. The fuel tank vent is restricted.	1. Loosen the cap. If the engine runs with the cap loosened, replace the cap.
	2. Dirt or water is in the fuel system.	2. Drain and flush the fuel system; add fresh fuel.
	3. The fuel filter is clogged.	3. Replace the fuel filter.
	4. The fuel pump is damaged.	4. Contact your Authorized Service Dealer.
	5. There is air in the fuel.	5. Bleed the nozzles and check for air leaks at fuel hose connections and fittings between the fuel tank and engine.
	6. Improper fuel grade for cold weather use.	6. Drain the fuel system and replace the fuel filter. Add fresh fuel of proper grade for ambient temperature conditions.
	7. The spark arrestor screen is clogged.	7. Clean or replace the spark arrestor screen.

Problem	Possible Causes	Corrective Action
The engine runs, but knocks or misses.	1. Dirt, water, stale fuel, or incorrect fuel is in the fuel system.	1. Drain and flush the fuel system; add fresh fuel.
	2. Engine overheating.	2. Refer to Engine Overheats.
	3. There is air in the fuel.	3. Bleed nozzles and check for air leaks at the fuel hose connections and fittings between the fuel tank and engine.
	4. The injection nozzles are damaged.	4. Contact your Authorized Service Dealer.
	5. Low compression	5. Contact your Authorized Service Dealer.
	6. The injection pump timing is incorrect.	6. Contact your Authorized Service Dealer.
	7. Excessive carbon build-up.	7. Contact your Authorized Service Dealer.
	8. Internal wear or damage.	8. Contact your Authorized Service Dealer.
The engine will not idle.	1. The fuel tank vent is restricted.	1. Loosen the cap. If the engine runs with the cap loosened, replace the cap.
	2. Dirt, water, stale fuel, or incorrect fuel is in the fuel system.	2. Drain and flush the fuel system; add fresh fuel.
	3. The fuel pump is damaged.	3. Contact your Authorized Service Dealer.
	4. Low compression.	4. Contact your Authorized Service Dealer.
	5. The air cleaner element is dirty.	5. Clean or replace.
	6. The fuel filter is clogged.	6. Replace the fuel filter.
	7. There is air in the fuel.	7. Bleed the nozzles and check for air leaks at the fuel hose connections and fittings between the fuel tank and engine.

Problem	Possible Causes	Corrective Action
The engine overheats.	1. More coolant is needed.	1. Check and add coolant.
	2. Restricted air flow to the radiator.	2. Inspect and clean the radiator screen with every use.
	3. The crankcase oil level is incorrect.	3. Fill or drain to the full mark.
	4. Excessive loading.	4. Reduce load; use lower ground speed.
	5. The thermostat is damaged.	5. Contact your Authorized Service Dealer.
	6. The fan belt is loose or broken.	6. Contact your Authorized Service Dealer.
	7. Incorrect fuel is in the fuel system.	7. Drain and flush the fuel system; add fresh fuel.
	8. Injection timing is incorrect.	8. Contact your Authorized Service Dealer.
	9. Coolant pump is damaged.	9. Contact your Authorized Service Dealer.
The engine loses power.	1. The crankcase oil level is incorrect.	1. Fill or drain to the full mark.
	2. The air cleaner element is dirty.	2. Clean or replace.
	3. Dirt, water, stale fuel, or incorrect fuel is in the fuel system.	3. Drain and flush the fuel system; add fresh fuel.
	4. The engine is overheated.	4. Refer to Engine Overheats.
	5. Low compression.	5. Contact your Authorized Service Dealer.
	6. The fuel tank vent is restricted.	6. Contact your Authorized Service Dealer.
	7. The engine load is excessive.	7. Reduce ground speed.
	8. There is air in the fuel.	8. Bleed the nozzles and check for air leaks at the fuel hose connections and fittings between the fuel tank and engine.
	9. The injection pump timing is incorrect.	9. Contact your Authorized Service Dealer.
	10. The injection pump is damaged.	10. Contact your Authorized Service Dealer.
	11. The spark arrestor screen is clogged.	11. Clean or replace the spark arrestor screen.

Problem	Possible Causes	Corrective Action
Excessive black smoke from exhaust.	1. The air cleaner element is dirty. 2. The injection pump timing is incorrect. 3. Incorrect fuel is in the fuel system. 4. The injection nozzles are damaged. 5. The injection pump is damaged. 6. Excessive loading.	1. Clean or replace. 2. Contact your Authorized Service Dealer. 3. Drain the fuel system and refill with specified fuel. 4. Contact your Authorized Service Dealer. 5. Contact your Authorized Service Dealer. 6. Reduce load; use lower ground speed.
Excessive white smoke from exhaust.	1. The key was turned to the start position before the glow plug light turned off. 2. The engine temperature is low. 3. The glow plugs are inoperative. 4. The fuel injection nozzles are damaged. 5. The injection pump timing is incorrect. 6. Low compression.	1. Turn the key to the run position and allow the glow plug light to turn off before starting the engine. 2. Check the thermostat. 3. Check the fuse, glow plugs and wiring. 4. Contact your Authorized Service Dealer. 5. Contact your Authorized Service Dealer. 6. Contact your Authorized Service Dealer.
Traction unit does not drive.	1. Traction pump drive coupler is loose or broken. 2. Hydro fluid level low. 3. Pump and/or wheel motor is damaged. 4. Control valve is damaged. 5. Relief valve is damaged. 6. The tow valves are open. 7. Flow divider valve lever is in 9 o'clock position.	1. Contact Authorized Service Dealer. 2. Add hydro fluid to reservoir. 3. Contact your Authorized Service Dealer. 4. Contact your Authorized Service Dealer. 5. Contact your Authorized Service Dealer. 6. Close the tow valves. 7. Move lever to 12 o'clock to 10 o'clock position.

Schematics

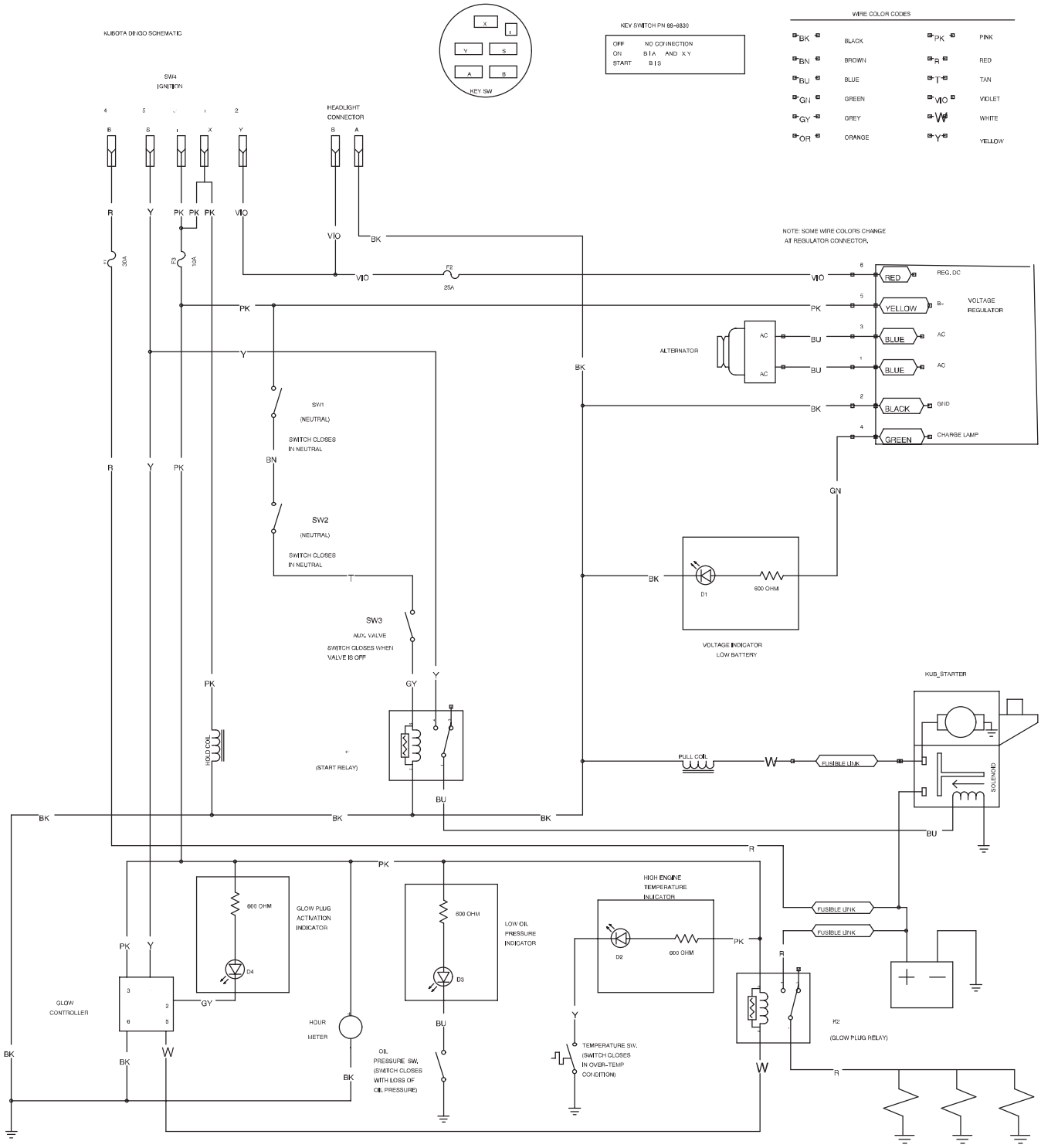

Electrical Schematic

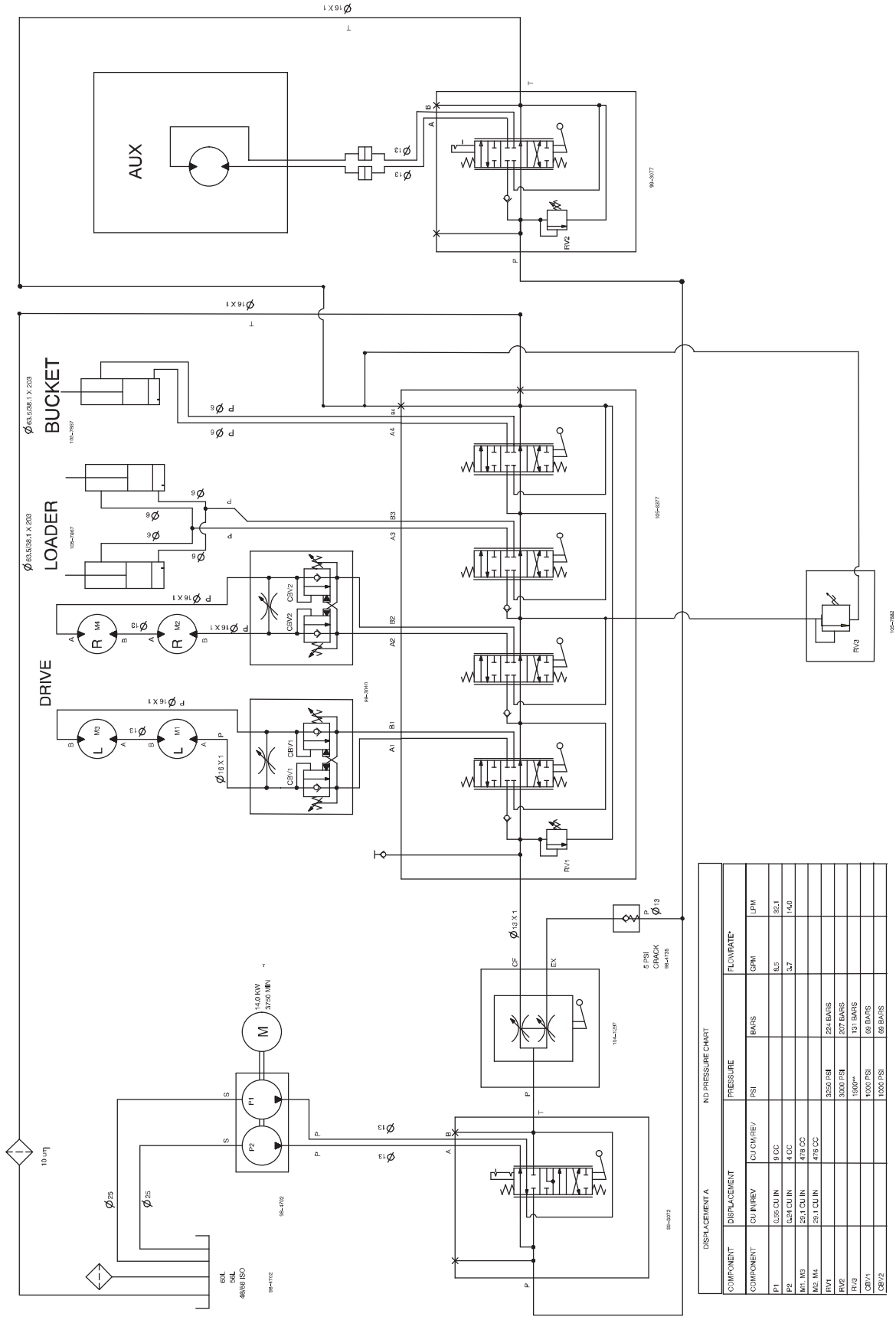

Hydraulic Schematic

The Toro Dingo Product Line Warranty

A One-Year Limited Warranty

Conditions and Products Covered

The Toro Company and its affiliate, Toro Warranty Company, pursuant to an agreement between them, jointly warrant your Toro Dingo Product ("Product") to be free from defects in materials or workmanship. The following time periods apply from the date the Product is delivered to the original retail purchaser:

Products	Warranty Period
• All traction units and attachments	1 year or 1000 operational hours, whichever occurs first
• All engines	2 years

Where a warrantable condition exists, we will repair the Product at no cost to you including diagnosis, labor, and parts.

Instructions for Obtaining Warranty Service

If you think that your Toro Product contains a defect in materials or workmanship, follow this procedure:

1. Contact any Authorized Dingo Service Dealer to arrange service at their dealership. To locate a dealer convenient to you, access our website at www.Toro.com. U.S. Customers may also call 800-348-2424.
2. Bring the product and your proof of purchase (sales receipt) to the Service Dealer.

If for any reason you are dissatisfied with the Service Dealer's analysis or with the assistance provided, contact us at:

LCB Customer Service Department
Toro Warranty Company
8111 Lyndale Avenue South
Bloomington, MN 55420-1196
888-577-7466 (U.S. customers)
877-484-9255 (Canada customers)

Owner Responsibilities

You must maintain your Toro Product by following the maintenance procedures described in the operator's manual. Such routine maintenance, whether performed by a dealer or by you, is at your expense. Parts scheduled for replacement as required maintenance ("Maintenance Parts"), are warranted for the period of time up to the scheduled replacement time for that part. Failure to perform required maintenance and adjustments can be grounds for disallowing a warranty claim.

Items and Conditions Not Covered

Not all product failures or malfunctions that occur during the warranty period are defects in materials or workmanship. This express warranty does not cover the following:

- Product failures which result from the use of non-Toro replacement parts, or from installation and use of add-on, modified, or unapproved accessories
- Product failures which result from failure to perform required maintenance and/or adjustments
- Product failures which result from operating the Product in an abusive, negligent or reckless manner
- Parts subject to consumption through use unless found to be defective. Examples of parts which are consumed, or used up, during normal Product operation include, but are not limited to, digging teeth, tines, spark plugs, tires, tracks, filters, chains, etc.
- Failures caused by outside influence. Items considered to be outside influence include, but are not limited to, weather, storage practices, contamination, use of unapproved coolants, lubricants, additives, or chemicals, etc.
- Normal "wear and tear" items. Normal "wear and tear" includes, but is not limited to, worn painted surfaces, scratched decals or windows, etc.
- Any component covered by a separate manufacturer's warranty
- Pickup and delivery charges

General Conditions

Repair by an Authorized Toro Service Dealer is your sole remedy under this warranty.

Neither The Toro Company nor Toro Warranty Company is liable for indirect, incidental or consequential damages in connection with the use of the Toro Products covered by this warranty, including any cost or expense of providing substitute equipment or service during reasonable periods of malfunction or non-use pending completion of repairs under this warranty.

Some states do not allow exclusions of incidental or consequential damages, or limitations on how long an implied warranty lasts, so the above exclusions and limitations may not apply to you.

This warranty gives you specific legal rights, and you may also have other rights which vary from state to state.

Except for the Emissions warranty referenced below, if applicable, there is no other express warranty. All implied warranties of merchantability and fitness for use are limited to the duration of this express warranty.

Note to California residents: The Emissions Control System on your Product may be covered by a separate warranty meeting requirements established by the U.S. Environmental Protection Agency (EPA) or the California Air Resources Board (CARB). The hour limitations set forth above do not apply to the Emissions Control System Warranty. Refer to the California Emission Control Warranty Statement printed in you operator's manual or contained in the engine manufacturer's documentation for details.

Countries Other than the United States or Canada

Customers who have purchased Toro products exported from the United States or Canada should contact their Toro Distributor (Dealer) to obtain guarantee policies for your country, province, or state. If for any reason you are dissatisfied with your Distributor's service or have difficulty obtaining guarantee information, contact the Toro importer. If all other remedies fail, you may contact us at Toro Warranty Company.

Part No. 374-0047 Rev. –