Form No. 3354-738 Rev A

TORO®

Count on it.

Operator's Manual

Dingo 320-D® Compact Utility Loader

Model No. 22303 with CE Kit 22365 Installed—Serial No. 260000001 and Up

CE

Register your product at www.Toro.com

Original Instructions (EN)

Introduction

Read this information carefully to learn how to operate and maintain your product properly and to avoid injury and product damage. You are responsible for operating the product properly and safely.

You may contact Toro directly at www.Toro.com for product and accessory information, help finding a dealer, or to register your product.

Whenever you need service, genuine Toro parts, or additional information, contact an Authorized Service Dealer or Toro Customer Service and have the model and serial numbers of your product ready. Figure 1 identifies the location of the model and serial numbers on the product. Write the numbers in the space provided.

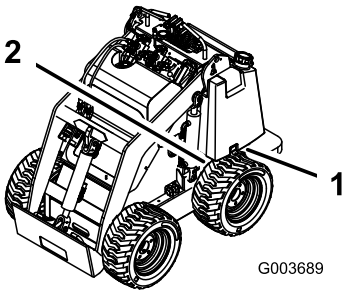

Figure 1

1. Model and serial number location
2. CE label

Model No. _____

Serial No. _____

This manual identifies potential hazards and has safety messages identified by the safety alert symbol (Figure 2), which signals a hazard that may cause serious injury or death if you do not follow the recommended precautions.



Figure 2

1. Safety alert symbol

This manual uses 2 other words to highlight information. **Important** calls attention to special mechanical information and **Note** emphasizes general information worthy of special attention.

Contents

Introduction 2
Safety 4
- Safe Operating Practices 4
- Sound Pressure 6
- Sound Power 6
- Vibration 6
- Slope Chart 7
- Safety and Instructional Decals 8

Setup 11
- 1 Installing the Speed Selector Lever 11
- 2 Charging and Connecting the Battery 11
- 3 Checking Fluid Levels 12

Product Overview 13
- Controls 13
- Specifications 16

Operation 18
- Adding Fuel 18
- Draining Water from the Fuel Filter 18
- Checking the Engine Oil Level 19
- Checking the Coolant Level 19
- Checking the Hydraulic Fluid Level 20
- Checking the Tire Pressure 20
- Testing the Parking Brake 20
- Starting and Stopping the Engine 20
- Driving Forward or Backward 21
- Stopping the Traction Unit 21
- Moving a Non-functioning Traction Unit 21
- Using the Cylinder Locks 22
- Installing and Removing Attachments 22
- Securing the Traction Unit for Transport 24

Maintenance 25
- Recommended Maintenance Schedule(s) 25
- Premaintenance Procedures 26
- Removing the Front Access Cover 26

© 2006—The Toro® Company
8111 Lyndale Avenue South
Bloomington, MN 55420

Contact us at www.Toro.com.
Printed in the USA.
All Rights Reserved

Opening the Rear Access Cover 26
Lubrication 26
Greasing the Traction Unit 26
Engine Maintenance 27
Servicing the Air Cleaner 27
Servicing the Engine Oil 28
Fuel System Maintenance 29
Changing the Fuel Filter 29
Bleeding the Fuel System 30
Draining the Fuel Tank 30
Electrical System Maintenance 31
Servicing the Battery 31
Hydraulic System Maintenance 32
Changing the Hydraulic Filter 32
Changing the Hydraulic Fluid 33
Checking the Hydraulic Lines 33
Cleaning 33
Removing Debris from the Traction Unit 33
Storage 34
Troubleshooting 35

Safety

Improper use or maintenance by the operator or owner can result in injury. To reduce the potential for injury, comply with these safety instructions and always pay attention to the safety alert symbol ⚠, which means: Caution, Warning, or Danger—personal safety instruction. Failure to comply with the instruction may result in personal injury or death.

Safe Operating Practices

This product is capable of amputating hands and feet. Always follow all safety instructions to avoid serious injury or death.

⚠

Engine exhaust contains carbon monoxide, an odorless, deadly poison that can kill you.

Do not run the engine indoors or in an enclosed area.

General Operation

- Read, understand, and follow all instructions in the operator's manual, in the video, and on the traction unit before starting. Also, read all attachment manuals where supplied.
- Allow only responsible adults who are familiar with the instructions to operate the traction unit.
- Wear long pants and substantial shoes. Wearing safety glasses, safety shoes, hearing protection, and a hard hat are advisable and may be required by some local ordinances and insurance regulations.
- Ensure that the area is clear of other people before operating the traction unit. Stop the traction unit if anyone enters the area.
- Never carry passengers on attachments or on the traction unit.
- Always look down and behind before and while backing.
- Do not place your feet under the platform.
- Slow down before turning. Sharp turns on any terrain may cause loss of control.
- Never leave a running traction unit unattended. Always lower the loader arms, stop the engine, and remove the key before dismounting.
- Do not exceed the rated operating capacity, as the traction unit may become unstable which may result in loss of control.
- Do not carry a load with the arms raised. Always carry loads close to the ground. Do not step off of the platform with the load raised.
- Do not over-load the attachment and always keep the load level when raising the loader arms. Logs, boards, and other items could roll down the loader arms, injuring you.
- Never jerk the control levers; use a steady motion.
- Keep your hands, feet, hair, and loose clothing away from any moving parts.
- Operate only in daylight or good artificial light.
- Do not operate the traction unit while under the influence of alcohol or drugs.
- Watch for traffic when operating near or crossing roadways.
- Use extra care when loading or unloading the traction unit onto a trailer or truck.
- Do not touch parts which may be hot from operation. Allow them to cool before attempting to maintain, adjust, or service.
- Do not operate the traction unit with any of the covers or guards removed.
- Check for overhead clearances (i.e. branches, doorways, electrical wires) before driving under any objects and do not contact them.
- Before digging, have the area marked for underground utilities, and do not dig in marked areas.

Slope Operation

Slopes are a major factor related to loss-of-control and tip-over accidents which can result in severe injury or death. All slopes require extra caution.

- Do not operate the traction unit on hillsides or slopes exceeding the angles recommended in the Stability Data section, page 11, and those in the attachment operator's manual. See also the slope chart on page 5.

- Operate up and down slopes with the heavy end of the traction unit uphill. Weight distribution changes. An empty bucket will make the rear of the traction unit the heavy end, and a full bucket will make the front of the traction unit the heavy end. Most other attachments will make the front of traction unit the heavy end.
- Raising the loader arms on a slope will affect the stability of the machine. Whenever possible, keep the loader arms in the lowered position when on slopes.
- Removing an attachment on a slope will make the rear of the traction unit heavy. Refer to the Stability Data section, page 11, to determine whether the attachment can be safely removed on the slope.
- Remove obstacles such as rocks, tree limbs, etc. from the work area. Watch for holes, ruts, or bumps, as uneven terrain could overturn the traction unit. Tall grass can hide obstacles.
- Use slow speed on slopes. Before starting the engine, put the pump selector lever in the slow (turtle) position so that you will not have to stop or shift while on the slope.
- Follow the recommendations in the attachment manuals for the use of counterweights to improve stability.
- Use only Toro approved attachments. Attachments can change the stability and the operating characteristics of the traction unit. Warranty may be voided if used with unapproved attachments.
- Keep all movements on slopes slow and gradual. Do not make sudden changes in speed or direction.
- Avoid starting or stopping on a slope. If tires lose traction, proceed slowly, straight down the slope.
- Avoid turning on slopes. If you must turn, turn slowly and keep the heavy end of the traction unit uphill.
- Do not operate near drop-offs, ditches, or embankments. The traction unit could suddenly turn over if a wheel goes over the edge of a cliff or ditch, or if an edge caves in.
- Do not operate on wet grass. Reduced traction could cause sliding.
- Do not park the traction unit on a hillside or slope without lowering the attachment to the ground and chocking the wheels.
- Do not try to stabilize the traction unit by putting your foot on the ground.

Children

Tragic accidents can occur if the operator is not alert to the presence of children. Children are often attracted to the traction unit and the work activity. Never assume that children will remain where you last saw them.

- Keep children out of the work area and under the watchful care of another responsible adult.
- Be alert and turn the traction unit off if children enter the area.
- Before and while backing, look behind and down for small children.
- Never carry children. They may fall off and be seriously injured or interfere with safe traction unit operation.
- Never allow children to operate the traction unit.
- Use extra care when approaching blind corners, shrubs, trees, the end of a fence, or other objects that may obscure vision.

Service

- Stop the engine before performing any service, repairs, maintenance, or adjustments.
- If any maintenance or repair requires the loader arms to be in the raised position, secure the arms in the raised position with the hydraulic cylinder locks included with traction unit.
- Never run a traction unit inside a closed area.
- Keep nuts and bolts tight. Keep equipment in good condition.
- Never tamper with safety devices. Check safety systems for proper operation before each use.
- Keep the traction unit free of grass, leaves, or other debris build-up. Clean up oil or fuel spillage. Allow the traction unit to cool before storing.
- Use extra care when handling fuel. It is flammable and vapors are explosive.

  - Use only an approved container.
  - Never remove the fuel tank cap or add fuel when the engine is running. Allow the engine to cool before refueling. Do not smoke.
  - Never refuel the traction unit indoors.
  - Never store the traction unit or fuel container inside where there is an open flame, such as near a water heater or furnace.
  - Never fill a container while it is inside a vehicle, trunk, pick-up bed, or any surface other than the ground.
  - Keep container nozzle in contact with the tank during filling.
- Stop and inspect the equipment if you strike an object. Make any necessary repairs before restarting.
- Use only genuine replacement parts to ensure that original standards are maintained.
- Battery acid is poisonous and can cause burns. Avoid contact with skin, eyes, and clothing. Protect your face, eyes, and clothing when working with a battery.
- Battery gases can explode. Keep cigarettes, sparks and flames away from the battery.
- Keep your body and hands away from pin hole leaks or nozzles that eject high pressure hydraulic fluid. Use cardboard or paper to find hydraulic leaks. Hydraulic fluid escaping under pressure can penetrate skin and cause injury requiring surgery within a few hours by a qualified surgeon or gangrene may result.

Sound Pressure

This unit has a maximum sound pressure level at the operator's ear of 97 dBA, based on measurements of identical machines per EN 11201.

Sound Power

This unit has a guaranteed sound power level of 101 dBA, based on measurements of identical machines per EN 6395.

Vibration

This unit does not exceed a hand/arm vibration level of 0.5 m/s^2, based on measurements of identical machines per EN 1033.

This unit does not exceed a whole body vibration level of 0.1 m/s^2, based on measurements of identical machines per EN 1032.

Slope Chart

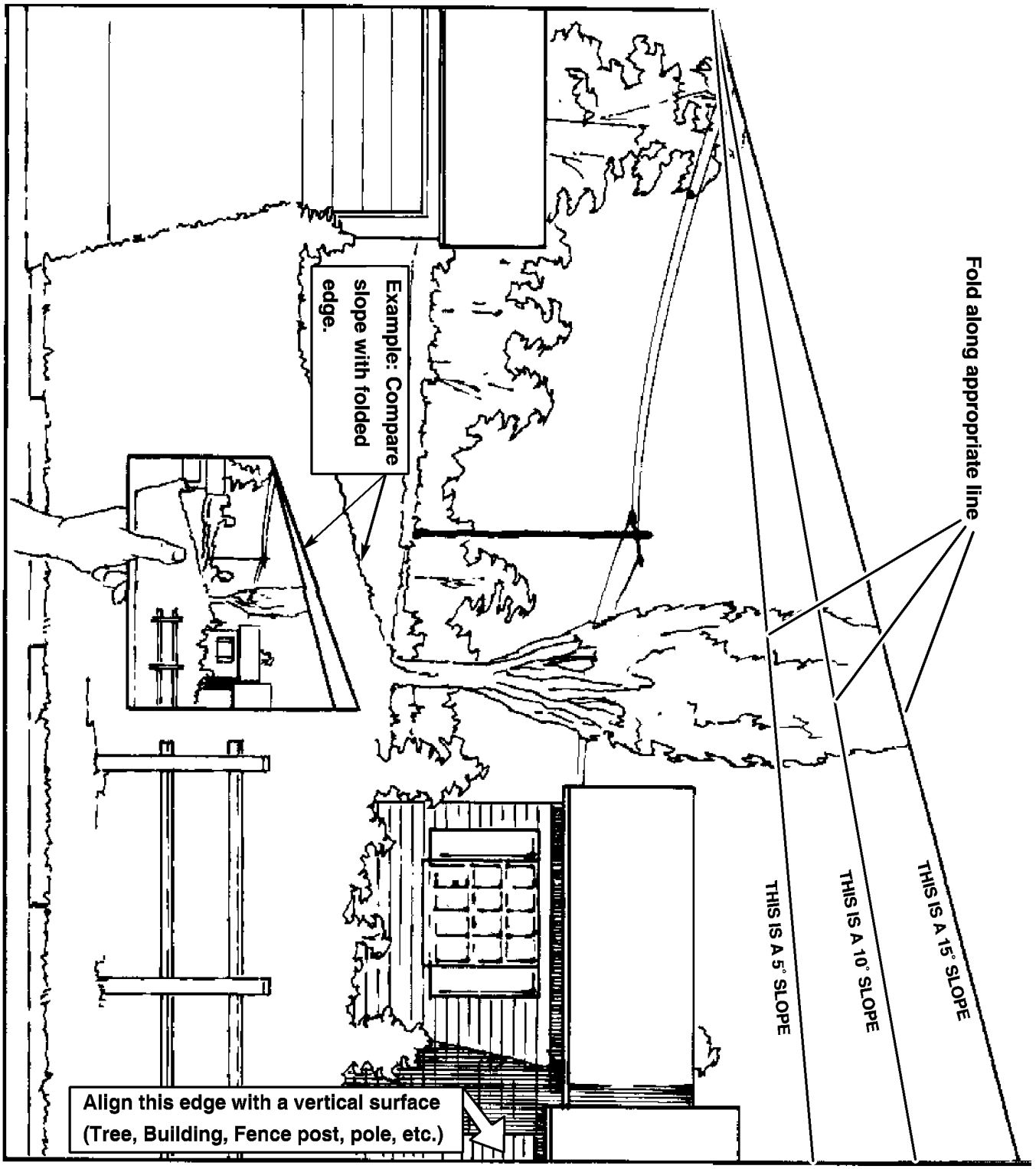
Fold along appropriate line
Example: Compare slope with folded edge.
THIS IS A 5° SLOPE
THIS IS A 10° SLOPE
THIS IS A 15° SLOPE
Align this edge with a vertical surface
(Tree, Building, Fence post, pole, etc.)

Safety and Instructional Decals

Safety decals and instructions are easily visible to the operator and are located near any area of potential danger. Replace any decal that is damaged or lost.

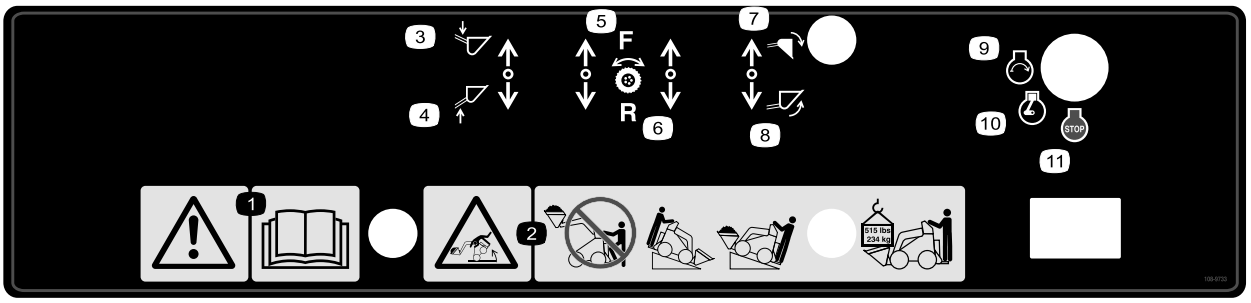

108-9733

1. Warning—read the *Operator's Manual.*
2. Tipping hazard—do not step off operator platform with load raised, always operate with the heavy end of the machine pointed uphill, carry loads low, maximum load is 515 lb (234 kg).
3. Arm lift–down
4. Arm lift— up
5. Wheel drive—forward
6. Wheel drive—reverse
7. Bucket tilt— down
8. Bucket tilt—up
9. Engine—start
10. Engine—run
11. Engine—stop

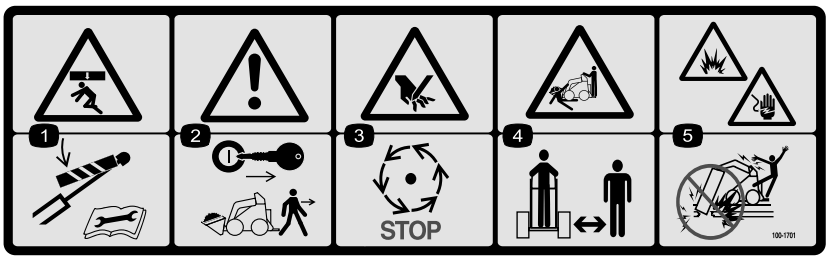

100-1701

1. Crushing hazard—install the cylinder lock and read the instructions before servicing or performing maintenance.
2. Warning—remove the ignition key and lower the loader arms before leaving the machine.
3. Cutting hazard of hand—wait for moving parts to stop.
4. Crushing/dismemberment hazard of bystanders—keep bystanders a safe distance from the machine.
5. Explosion and electrical shock hazards—do not dig in areas with buried gas or electrical lines.

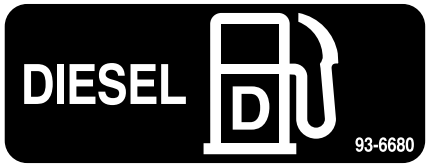

93-6680

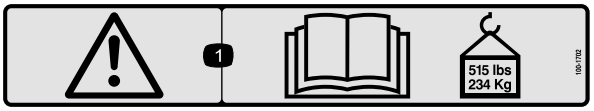

100-1702

1. Warning—read the *Operator's Manual*; maximum load rating of 515 lb. (234 Kg).

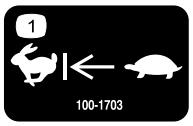

100-1703

1. Speed selector

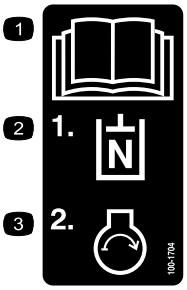

100-1704

1. Read the *Operator's Manual*.
2. Place the auxiliary hydraulics in Neutral.
3. Start the engine.

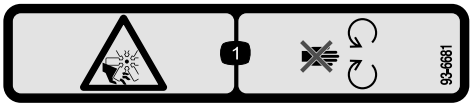

93-6681

1. Cutting/dismemberment—hazard, fan-stay away from moving parts.

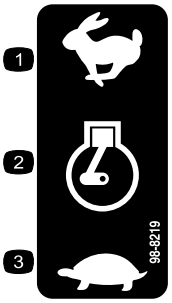

98-8219

1. Fast
2. Throttle
3. Slow

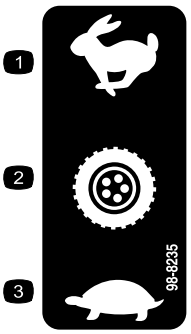

98-8235

1. Fast
2. Traction drive
3. Slow



100-1692

1. Brake engaged
2. Parking brake
3. Brake disengaged

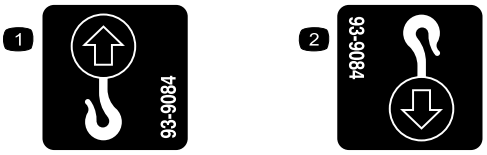

93-9084

1. Lift point
2. Tie-down point

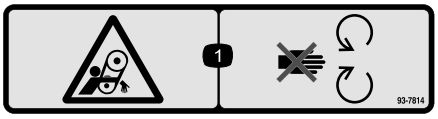

93-7814

1. Entanglement hazard, belt—stay away from moving parts.



100-8821

1. Crushing hazard and cutting hazard of hand—stay a safe distance from the front of the traction unit when the loader arms are raised.

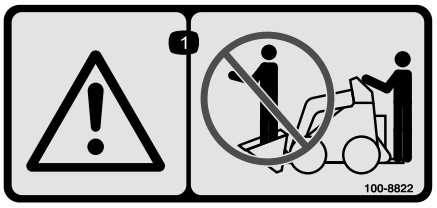

100-8822

1. Warning—do not carry passengers.

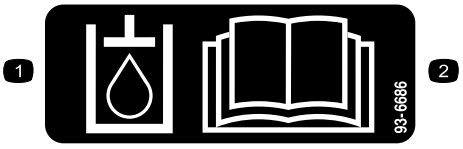

93-6686

1. Hydraulic oil
2. Read the *Operator's Manual.*

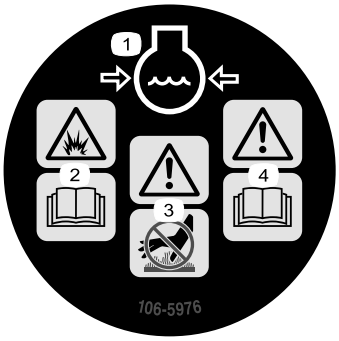

106-5976

1. Engine coolant under pressure
2. Explosion hazard—read the *Operator's Manual*.
3. Warning—do not touch the hot surface.
4. Warning—read the *Operator's Manual*.



Battery Symbols

Some or all of these symbols are on your battery

1. Explosion hazard
2. No fire, open flame, or smoking.
3. Caustic liquid/chemical burn hazard
4. Wear eye protection
5. Read the *Operator's Manual.*
6. Keep bystanders a safe distance from the battery.
7. Wear eye protection; explosive gases can cause blindness and other injuries
8. Battery acid can cause blindness or severe burns.
9. Flush eyes immediately with water and get medical help fast.
10. Contains lead; do not discard.

Setup

Loose Parts

Use the chart below to verify that all parts have been shipped.

Step	Description	Qty.	Use
1	Speed selector lever	1	Install the speed selector lever.
2	No parts required	–	Charge and connect the battery.
3	No parts required	–	Check the fluid levels.

Step 1

Installing the Speed Selector Lever

Parts needed for this step:

1	Speed selector lever

Procedure

1. Remove and discard the nut securing the bolt and washer to the speed selector lever.
2. Secure the lever to the speed selector valve using the bolt and washer as illustrated in Figure 3.

   Note: The lever should be installed with the bend toward the operator.

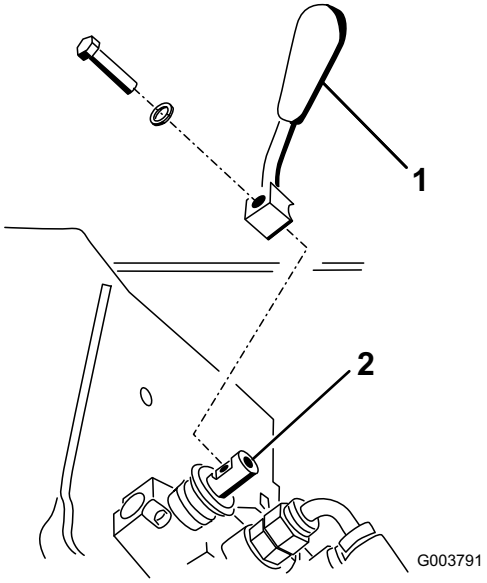

Figure 3

1. Speed selector lever
2. Speed selector valve

Step
2

Charging and Connecting the Battery

No Parts Required

Procedure

Battery terminals or metal tools could short against metal components, causing sparks. Sparks can cause the battery gasses to explode, resulting in personal injury.

- **When removing or installing the battery, do not allow the battery terminals to touch any metal parts of the traction unit.**
- **Do not allow metal tools to short between the battery terminals and metal parts of the traction unit.**

1. Remove the 4 bolts securing the battery cover and remove it from over the battery.
2. Remove and discard the plastic cap from the negative battery terminal.
3. Connect a charger to the battery (Figure 4) and charge it for a minimum of 1 hour at 6 to 10 amps. Do not overcharge the battery.

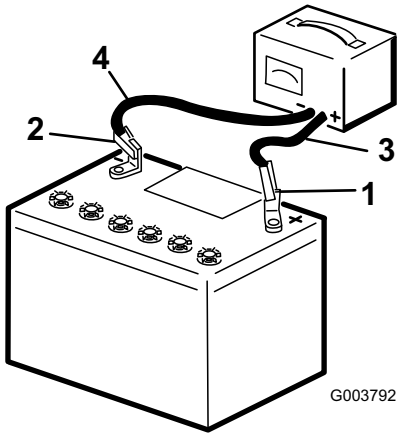

Figure 4

1. Positive post
2. Negative post
3. Charger red (+) wire
4. Charger black (—) wire

Charging the battery produces gasses that can explode.

Never smoke near the battery and keep sparks and flames away from battery.

4. When the battery is fully charged, unplug the charger from the electrical outlet, then disconnect the charger leads from the battery posts (Figure 4).
5. Cut the tie securing the loose end of the negative battery cable to the frame. The cable is located to the right of the engine and is routed forward and tied to the frame at the factory.
6. Route the negative battery cable from the engine compartment to the battery and secure it to the negative battery terminal.
7. Install the battery cover and close the rear access cover.

Step
3

Checking Fluid Levels

No Parts Required

Procedure

Before starting the engine for the first time, check the engine oil, radiator coolant, and hydraulic fluid levels. Refer to Operation for more information.

Product Overview

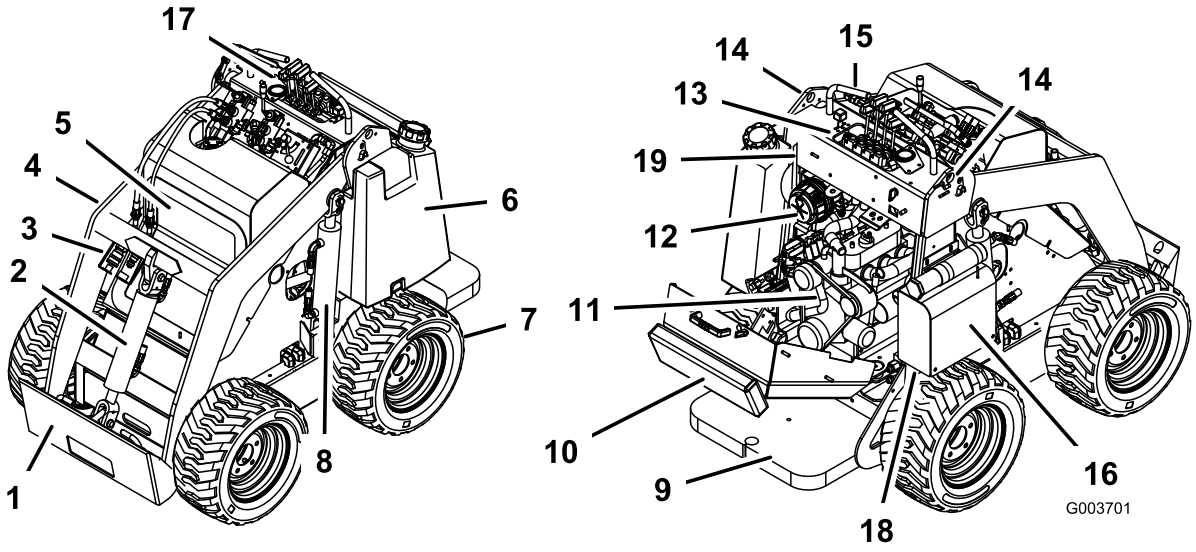

Figure 5

1. Mount
2. Tilt cylinder
3. Auxiliary hydraulic couplers
4. Loader arms
5. Front access cover
6. Fuel tank
7. Wheel
8. Lift cylinder
9. Operator platform
10. Rear access cover (open)
11. Engine
12. Air filter
13. Control panel
14. Lift points
15. Handle
16. Battery
17. Indicator lights
18. Tow valves
19. Parking brake lever

Controls

Become familiar with all the controls (Figure 6) before you start the engine and operate the traction unit.

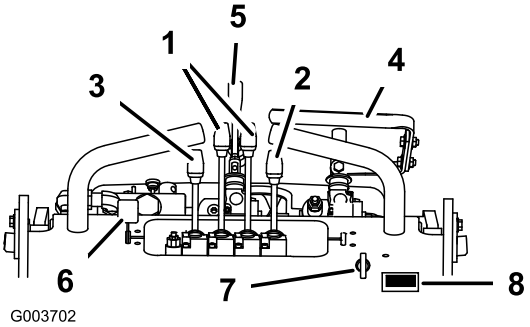

Figure 6

1. Traction control levers
2. Attachment lift lever
3. Loader arm lever
4. Auxiliary hydraulics lever
5. Speed selector lever
6. Throttle lever
7. Key switch
8. Hour meter

Key Switch

The key switch, used to start and stop the engine, has three positions: stop, run, and start.

To start the engine, rotate the key to the start position. Release the key when engine starts and it will move automatically to the run position.

To stop the engine, rotate the key to the stop position.

Throttle Lever

Move the control forward to increase the engine speed and rearward to decrease speed.

Traction Control Levers

To move forward, move the traction control levers forward. To move rearward, move the traction control levers rearward.

To go straight, move both traction control levers equally.

To turn, move the lever located on the side you want to turn back toward the neutral position while keeping the other lever engaged.

The farther you move the traction control levers in either direction, the faster the traction unit will move in that direction.

To slow or stop, move the traction control levers to neutral.

Attachment Tilt Lever

To tilt the attachment forward, slowly push the attachment tilt lever forward.

To tilt the attachment rearward, slowly pull the attachment tilt lever rearward.

Loader Arm Lever

To lower the loader arms, slowly push the loader arm lever forward.

To raise the loader arms, slowly pull the loader arm lever rearward.

Loader Valve Lock

The loader valve lock secures the loader arm and attachment tilt levers so that you cannot push them forward. This helps to ensure that no one will accidentally lower the loader arms during maintenance. Secure the loader arms with the lock anytime you need to stop the machine with the loader arms raised.

To set the lock, pull it back and all the way down against the levers (Figure 7).

Note: You will need to move the levers rearward to engage or disengage the loader valve lock.

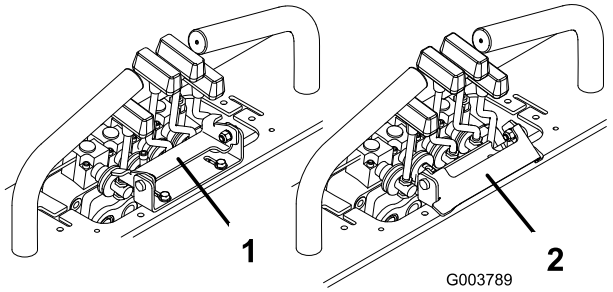

Figure 7

1. Loader valve lock, engaged 2. Loader valve lock, disengaged

Auxiliary Hydraulics Lever

To operate a hydraulic attachment in a forward direction, push the lever to the left, out of the neutral slot, and slowly pull the auxiliary hydraulics lever rearward.

To operate a hydraulic attachment in reverse direction, push the lever to the left, out of the neutral slot, and slowly push the auxiliary hydraulics lever forward. You can also set the lever so that the reverse hydraulics are on without operator presence. To do so, move the lever completely to the left and then forward until the lever remains in the reverse position.

Speed Selector Lever

Move the speed selector lever to the fast (rabbit) position to set the traction drive, loader arms, and attachment tilt to high speed and the auxiliary hydraulics to low speed.

Move the speed selector lever to the slow (turtle) position to set the auxiliary hydraulics to high speed and the traction drive, loader arms, and attachment tilt to low speed.

If you move the speed selector lever while the traction unit is in motion, the traction unit will either stop suddenly or accelerate quickly. If you operate the traction unit with the speed selector lever in an intermediate position, the traction unit will operate erratically and may be damaged. You could lose control of the traction unit and injure bystanders or yourself.

- **Do not move the speed selector lever when the traction unit is in motion.**
- **Do not operate the traction unit when the speed selector is in any intermediate position (i.e., any position other than fully forward or fully rearward).**

Hour Meter

The hour meter displays the number of hours of operation that have been logged on the traction unit.

After 50 hours and every 75 hours thereafter (that is at 50, 125, 200, etc.) the hour meter displays SVC on the lower left side of the screen to remind you to change the oil and perform the required maintenance. After every 400 hours (400, 800, 1200, etc.), the hour meter displays SVC on the lower right side of the screen to remind you to perform the maintenance procedures based on a 400 hour schedule. These reminders come on

starting three hours prior to the service interval time and flash at regular intervals for six hours.

Flow Divider Control

The traction unit hydraulics (i.e., the traction drive, loader arms, and attachment tilt) work on a separate hydraulic circuit from the auxiliary hydraulics for powering attachments; however, the two systems share the same hydraulic pumps. Using the flow divider control (Figure 8), you can vary the speed of the traction unit hydraulics by diverting hydraulic flow to the auxiliary hydraulics circuit. The flow divider allows you to divide the flow of fluid in varying degrees to slow the traction unit. Thus, the more hydraulic flow you divert to the auxiliary hydraulics, the slower the traction unit hydraulics will move.

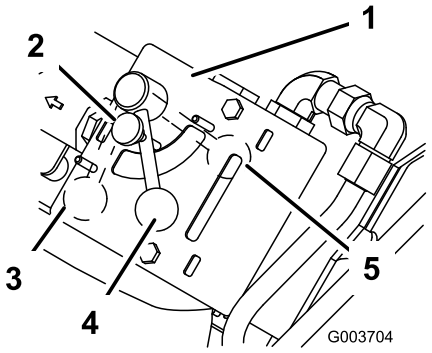

Figure 8

1. Flow divider control
2. Knob
3. 12 o'clock position
4. 10 to 11 o'clock position
5. 9 o'clock position

- Move the flow divider control to the twelve o'clock position to provide maximum speed to the traction unit hydraulics.

  Use this setting for fast operation of the traction unit.

- Move the flow divider control between the twelve o'clock and nine o'clock positions to slow the traction unit hydraulics and fine tune the speed.

  Use a setting in this range with attachments with hydraulics where you need to both run the attachment and move the traction unit hydraulics, such as the auger, boring unit, hydraulic blade, and tiller.

- Move the control to the nine o'clock position to transfer all hydraulic flow to the auxiliary hydraulics of the attachment.

  In this setting, the traction unit hydraulics will not work. Use this setting with hydraulic attachments that do not required the traction unit hydraulics. There are currently no attachments that require the nine o'clock position; however, the trencher does work best if you set it close to nine o'clock so that the traction unit will creep slowly when trenching.

Note: The flow divider control can be fixed in place by turning the knob on the control clockwise until it contacts the dial (Figure 8).

Parking Brake

The traction unit is equipped with a parking brake (Figure 9). Rotate the brake lever downward to set the brake to lock the rear wheels whenever the traction unit will be stopped on a hill or left unattended. Move the lever up before driving the traction unit.

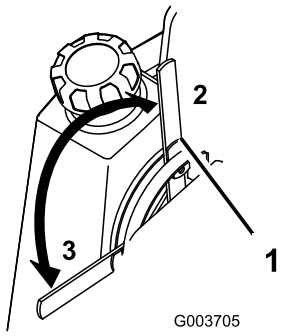

Figure 9

1. Parking brake lever
2. Brake off position
3. Brake on position

Oil Pressure Light

This light (Figure 10) is on for a few seconds whenever you start the engine. If the oil pressure light is on while the engine is running, the engine oil pressure is low. Stop the engine and allow the traction unit to cool down. Check the oil level and fill the crankcase with oil as needed. If the problem persists, contact your Authorized Toro Dealer for diagnostics and repair.

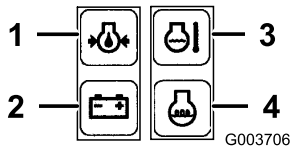

Figure 10

1. Oil pressure light
2. Battery light
3. Engine temperature light
4. Glow plug light

Battery Light

This light (Figure 10) is on for a few seconds whenever you start the engine. If the battery light is on while the engine is running, the alternator, battery, or electrical system is broken. Contact your Authorized Toro Dealer for diagnostics and repair.

Engine Temperature Light

If the engine temperature light (Figure 10) is on, the engine is overheating. Stop the engine and allow the traction unit to cool down. Check the coolant level and the belts to the fan and water pump. Fill the coolant as required and replace any worn or slipping belts. If the problem persists, contact your Authorized Toro Dealer for diagnostics and repair.

Glow Plug Light

This light (Figure 10) is on when the key is turned to run before starting the engine. The glow plug light will remain on for up to 10 seconds, indicating that the glow plugs are warming the engine.
If the glow plug light is on while the engine is running, the glow plugs are broken. Contact your Authorized Toro Dealer for diagnostics and repair.

Specifications

Note: Specifications and design are subject to change without notice.

Width	40.5 inches (103 cm)
Length	60 inches (152 cm)
Height	49 inches (125 cm)
Weight	1722 lb (783 kg)
Rated operating capacity (with 200 lb operator and standard bucket)	524 lb (238 kg)
Tipping capacity (with 200 lb operator and standard bucket)	1048 lb (476 kg)
Wheelbase	28 inches (71 cm)
Dump height (with standard bucket)	47 inches (119 cm)
Reach—fully raised (with standard bucket)	26 inches (66 cm)
Height to hinge pin (standard bucket in highest position)	66 inches (168 cm)

Attachments/Accessories

A selection of Toro approved attachments and accessories are available for use with the machine to enhance and expand its capabilities. Contact your Authorized Service Dealer or Distributor or go to www.Toro.com for a list of all approved attachments and accessories.

Important: Use only Toro approved attachments. Other attachments may create an unsafe operating environment or damage the traction unit.

Stability Data

The following table lists the maximum slope recommended for the traction unit in the positions listed in the table. Slopes over the listed degree may cause the traction unit to become unstable. The data in the table assumes that the loader arms are fully lowered and that the factory installed tires are on the traction unit, inflated to the recommended pressure; raised arms and other tire types or pressure may affect the stability.

Configuration	Maximum Recommended Slope when Operating with: Front Uphill 	Rear Uphill 	Side Uphill 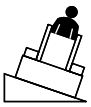
Traction unit without attachment	7°	20°	17°
Traction unit with counterweight, without attachment	5°	21°	17°
Traction unit with an attachment rated with one of the following stability ratings for each slope position:*			
A	25°	25°	20°
B	18°	19°	18°
C	15°	16°	14°
D	10°	10°	9°
E	5°	5°	5°

* In each attachment manual is a set of three stability ratings, one for each hill position. To determine the maximum slope you can traverse with the attachment installed, find the degree of slope that corresponds to the stabilities ratings of the attachment.

Example: If the attachment installed on the traction unit has a Front Uphill rating of B, a Rear Uphill rating of D, and a Side Uphill rating of C, then you could drive forward up an 18° slope, rearward up a 10° slope, or sideways on a 14° slope, as listed in the above table.

Operation

Note: Determine the left and right sides of the machine from the normal operating position.

You could fall off of the platform and be seriously injured during operation.

Do not move the control levers unless you are standing with both feet on the platform and your hands are holding the handles.

If you operate the traction unit with out the covers or guards in place, you could be seriously injured by moving parts.

Do not operate the traction unit with any of the covers or guards opened or removed.

Before operating, check the fuel and oil level, remove debris from the traction unit, and check the tire pressure. Also, ensure that the area is clear of people and debris. You should also know and have marked the locations of all utility lines.

Adding Fuel

In certain conditions, fuel is flammable and explosive. A fire or explosion can burn you and others and can damage property.

- **Fill the fuel tank outdoors, in an open area, when the engine is cold. Wipe up any fuel that spills.**
- **Do not fill the fuel tank completely full. Add fuel to the fuel tank until the level is 1/4 to 1/2 inches (6 to 13 mm) below the bottom of the filler neck. This empty space in the tank allows fuel to expand.**
- **Never smoke when handling fuel, and stay away from an open flame or where fuel fumes may be ignited by a spark.**
- **Store fuel in an approved container and keep it out of the reach of children. Never buy more than a 30-day supply.**

The engine runs on clean, fresh diesel fuel with a minimum cetane rating of 40. Purchase fuel in quantities that can be used within 30 days to ensure fuel freshness.

Use summer grade diesel fuel (No. 2-D) at temperatures above 20° F (-7° C) and winter grade diesel fuel (No. 1-D or No. 1-D/2-D blend) below 20° F (-7° C). Use of winter grade diesel fuel at lower temperatures provides lower flash point and pour point characteristics, allowing easier starts and lessening the chances of chemical separation of the fuel due to lower temperatures.

Use of summer grade diesel fuel above 20° F (-7° C) will contribute toward longer life of the fuel pump components.

Important: Do not use kerosene or gasoline in place of diesel fuel. Failure to observe this caution will damage the engine.

1. Park the traction unit on a level surface, lower the loader arms, and stop the engine.
2. Remove the key and allow the engine to cool.
3. Clean around the fuel tank cap and remove the cap.
4. Add diesel fuel to the fuel tank, until the level is 1/4 to 1/2 inch (6 mm to 13 mm) below the bottom of the filler neck.

   Note: This space in the tank allows fuel to expand. Do not fill the fuel tank completely full.
5. Install the fuel tank cap securely. Wipe up any fuel that may have spilled.

If possible, fill the fuel tank after each use. This will minimize possible buildup of condensation inside the fuel tank.

Draining Water from the Fuel Filter

Drain water or other contaminants from the fuel filter daily.

1. Stop the engine and remove the key.
2. Open the rear access cover.
3. Turn the drain valve until the water runs out of the filter (Figure 11).

   Note: The fuel filter is located near the bottom of the fuel tank.

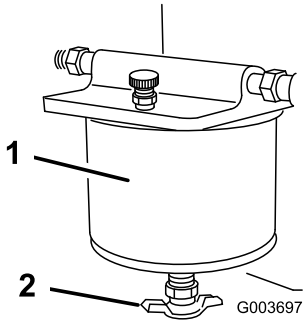

Figure 11

1. Fuel filter
2. Drain valve

4. Close the valve.
5. Close the rear access cover.

Checking the Engine Oil Level

1. Park the traction unit on a level surface, lower the loader arms, and stop the engine.
2. Remove the key and allow the engine to cool.
3. Open the rear access cover.
4. Clean around the oil dipstick (Figure 12).

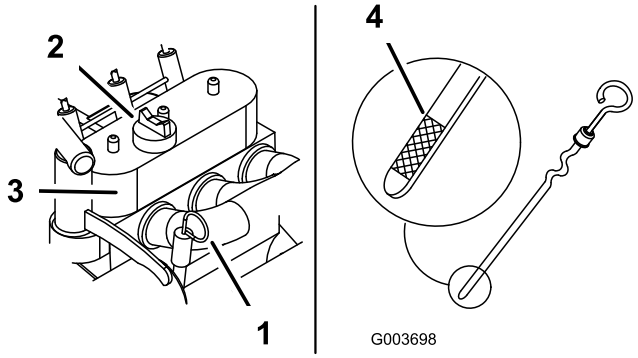

Figure 12

1. Oil dipstick
2. Filler cap
3. Valve cover
4. Metal end

5. Pull out the dipstick and wipe the metal end clean (Figure 12).
6. Slide the dipstick fully into the dipstick tube (Figure 12).
7. Pull the dipstick out and look at the metal end.
8. If the oil level is low, clean around the oil filler cap and remove the cap (Figure 12).
9. Slowly pour only enough oil into the valve cover to raise the level to the upper mark/hole

Important: .If you overfill the crankcase with oil, the excess oil may damage the engine.

10. Replace the filler cap and dipstick.
11. Close the rear access cover.

Checking the Coolant Level

The cooling system is filled with a 50/50 solution of water and permanent ethylene glycol antifreeze. Check the level of coolant at the beginning of each day, before starting the engine.

If the engine has been running, the coolant in the radiator will be hot and pressurized. If you remove the cap, it may spray out, causing severe burns.

- **Do not remove the radiator cap to check coolant levels.**
- **Do not remove the radiator cap when the engine is hot. Allow the engine to cool for at least 15 minutes or until the radiator cap is cool enough to touch without burning your hand.**

1. Park the traction unit on a level surface, lower the loader arms, and stop the engine. Remove the key.
2. Allow the engine to cool.
3. Remove the radiator filler cap and check the coolant level (Figure 13). The coolant should be up to filler neck.

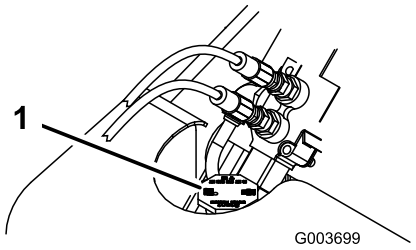

Figure 13

1. Filter cap

4. If coolant level is low, replenish the system.

Important: Do not over fill the radiator.

5. Replace the radiator filler cap, ensuring that it is tightly sealed.

Checking the Hydraulic Fluid Level

Check the hydraulic fluid level before the engine is first started and after every 25 operating hours.

Hydraulic Tank Capacity: 17.25 gal. (67 l)

Use 10W-30 or 15W-40 detergent, diesel engine oil (API service CH-4 or higher).

1. Remove the attachment, if one is installed.
2. Park the traction unit on a level surface, raise the loader arms, and install the cylinder locks.
3. Stop the engine and remove the key.
4. Remove the front access cover.
5. Clean the area around the filler neck of the hydraulic tank (Figure 14).

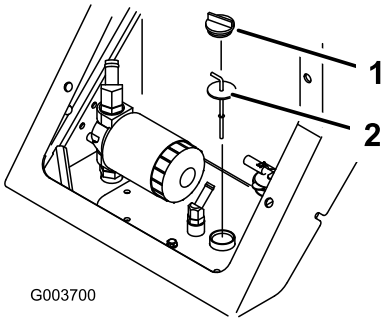

Figure 14

1. Filler neck cap
2. Dipstick

6. Remove the cap from the filler neck and check the fluid level on the dipstick (Figure 14).
7. If the level is low, add enough fluid to raise it to the proper level.
8. Install the cap on the filler neck.
9. Install the front access cover.
10. Remove and store the cylinder locks and lower the loader arms.

Checking the Tire Pressure

Maintain the air pressure in the tires as specified. Check the tires when they are cold to get the most accurate reading.

Pressure: 15-20 psi (103-138 kPa)

Note: Use a lower tire pressure (15 psi/103 kPa) when operating in sandy soil conditions to provide better traction in the loose soil.

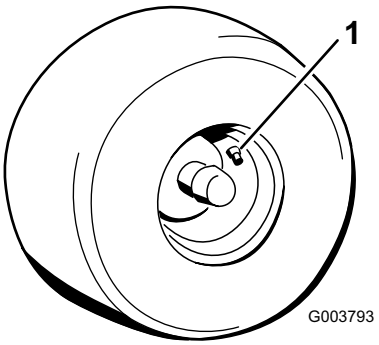

Figure 15

Testing the Parking Brake

Before using the traction unit each day, test the parking brake.

1. Set the parking brake.
2. Start the engine.
3. Slowly ease the traction drive levers forward or rearward.
4. If the traction unit moves, contact your Authorized Toro Dealer for service.

Starting and Stopping the Engine

Starting the Engine

1. Stand on the platform.
2. Move the auxiliary hydraulics valve lever to neutral.
3. Move the throttle lever midway between slow (turtle) and fast (rabbit) positions.
4. Insert the key into the ignition and turn it to the run position.

   Note: The battery, oil pressure, and glow plug lights will come on.
5. When the glow plug light turns off, turn the key to the start position. When the engine starts, release the key.

   Note: A warm or hot engine may be started without waiting for the light to turn off.

Important: **Do not engage the starter for more than 10 seconds at a time. If the engine fails to start, allow a 30 second cool-down period between attempts. Failure to follow these instructions can burn out the starter motor.**

6. Move the throttle lever to the desired setting.

Important: **If the engine is run at high speeds when the hydraulic system is cold (i.e., when the ambient air temperature is around freezing or lower), hydraulic system damage could occur. When starting the engine in cold conditions, allow the engine to run in the middle throttle position for 2 to 5 minutes before moving the throttle to fast (rabbit).**

Stopping the Engine

1. Move the throttle lever to the slow (turtle) position.
2. Lower the loader arms to the ground.
3. Turn the ignition key to the stop position.

Note: If the engine has been working hard or is hot, let it idle for a minute before stopping it. This helps to cool the engine. In an emergency, the engine may be stopped immediately.

Driving Forward or Backward

Note: The throttle control regulates the engine speed. Place the throttle lever in the fast (rabbit) position for best performance. You can also use the throttle position to operate at slower speeds.

To drive the traction unit, complete the following actions as necessary:

- To move forward, move the traction control levers forward.
- To move rearward, move the traction control levers rearward.
- To go straight, move both traction control levers equally.
- To turn, move the lever located on the side you want to turn toward the neutral position while keeping the other lever engaged.
- To slow or stop, move the traction control levers to neutral.

Note: The farther you move the traction control levers in either direction, the faster the traction unit will move in that direction.

Stopping the Traction Unit

To stop the traction unit, move the traction control levers to neutral and the throttle lever to slow (turtle), lower loader arms to the ground, and turn the ignition key off to stop the engine. Remove the key and set the parking brake.

A child or untrained bystander could attempt to operate the traction unit and be injured.

Remove the key from the switch when leaving the traction unit, even if just for a few seconds.

Moving a Non-functioning Traction Unit

Important: **Do not tow or pull the traction unit without first opening the tow valves, or the hydraulic system will be damaged.**

1. Stop the engine.
2. Remove the plug covering each tow valve (Figure 16).

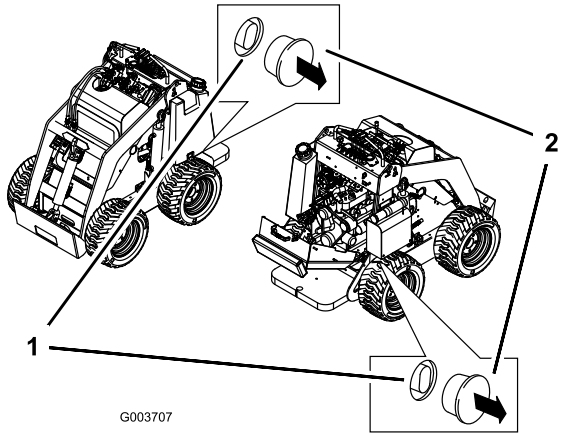

Figure 16

1. Tow valve
2. Plug

3. Loosen the jam nut on each tow valve (Figure 16).
4. Turn the valves counterclockwise one turn with a hex wrench to open them.
5. Tow the traction unit as required.

Important: **Do not exceed 3 mph when towing.**

6. When the traction unit has been repaired, close the tow valves and tighten the jam nuts.

   Important: **Do not overtighten the tow valves.**

7. Replace the plugs.

Using the Cylinder Locks

The loader arms may lower when in the raised position crushing anyone under them.

Install the cylinder locks before performing maintenance that requires raised loader arms.

Installing the Cylinder Locks

1. Start the engine.
2. Raise the loader arms to the fully raised position.
3. Stop the engine.
4. Position a loader arm cylinder lock over each lift cylinder rod (Figure 17).

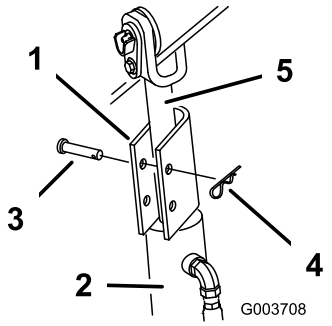

Figure 17

1. Cylinder lock
2. Lift cylinder
3. Clevis pin
4. Hairpin cotter
5. Lift cylinder rod

5. Secure each loader arm cylinder lock with a clevis pin and cotter pin (Figure 17).
6. With the engine off, lower the loader arms.

Removing/Storing the Cylinder Locks

1. Start the engine.
2. Raise the loader arms to the fully raised position.
3. Stop the engine.
4. Remove the clevis pin and cotter pin securing each cylinder lock.
5. Remove the cylinder locks.
6. Lower the loader arms.
7. Install the cylinder locks over the hydraulic hoses and secure them with the clevis pins and cotter pins (Figure 18).

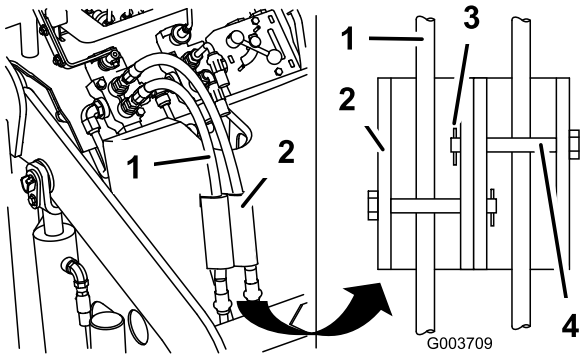

Figure 18

1. Hydraulic hoses
2. Cylinder locks
3. Hairpin cotter
4. Clevis pin

Installing and Removing Attachments

Installing an Attachment

Important: **Use only Toro-approved attachments. Attachments can change the stability and the operating characteristics of the traction unit. The warranty of the traction unit may be voided if used with unapproved attachments.**

Important: **Before installing the attachment, ensure that the mount plates are free of any dirt or debris and that the pins rotate freely. If the pins do not rotate freely, grease them.**

1. Position the attachment on a level surface with enough space behind it to accommodate the traction unit.
2. Start the engine.
3. Tilt the attachment mount plate forward.
4. Position mount plate into the upper lip of the attachment receiver plate (Figure 19).

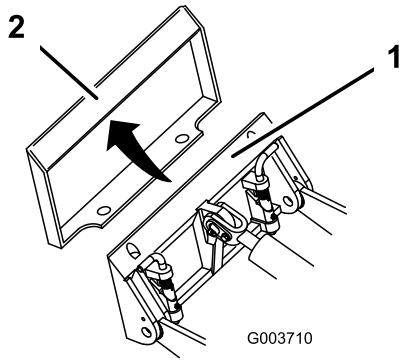

Figure 19

1. Mount plate
2. Receiver plate

5. Raise the loader arms while tilting back the mount plate at the same time.

   Important: The attachment should be raised enough to clear the ground, and the mount plate should be tilted all the way back.

6. Stop the engine.
7. Engage the quick attach pins, ensuring that they are fully seated in the mount plate (Figure 20).

   Important: If the pins do not rotate to the engaged position, the mount plate is not fully aligned with the holes in the attachment receiver plate. Check the receiver plate and clean it if necessary.

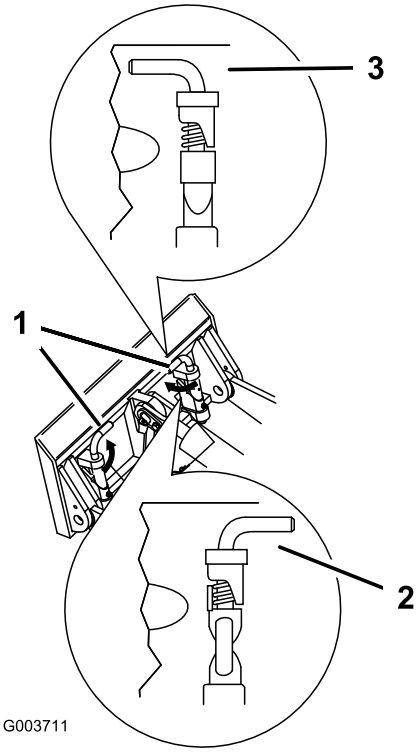

Figure 20

1. Quick attach pins (shown in engaged position)
2. Disengaged position
3. Engaged position

If you do not fully seat the quick attach pins through the attachment mount plate, the attachment could fall off of the traction unit, crushing you or bystanders.

Ensure that your quick attach pins are fully seated in the attachment mount plate.

Connecting the Hydraulic Hoses

If the attachment requires hydraulics for operation, connect the hydraulic hoses as follows:

Stop the engine.

1.
2. Move the auxiliary hydraulics lever forward, backward, and back to neutral to relieve pressure at the hydraulic couplers.
3. Push the auxiliary hydraulics lever forward into the detent position.
4. Remove the protective covers from the hydraulic couplers on the traction unit.

5. Ensure that all foreign matter is cleaned from the hydraulic connectors.
6. Push the attachment male connector into the female connector on the traction unit.

   Note: When you connect the attachment male connector first, you will relieve any pressure build up in the attachment.

Hydraulic fluid escaping under pressure can penetrate skin and cause injury. Fluid injected into the skin must be surgically removed within a few hours by a doctor familiar with this form of injury or gangrene may result.

- **Keep your body and hands away from pin hole leaks or nozzles that eject high pressure hydraulic fluid.**
- **Use cardboard or paper to find hydraulic leaks, never use your hands.**

Hydraulic couplers, hydraulic lines/valves, and hydraulic fluid may be hot. If you contact hot components you may be burned.

- **Wear gloves when operating the hydraulic couplers.**
- **Allow the traction unit to cool before touching hydraulic components.**
- **Do not touch hydraulic fluid spills.**

7. Push the attachment female connector into the male connector on the traction unit.
8. Confirm that the connection is secure by pulling on the hoses.
9. Move the auxiliary hydraulics lever to neutral.

Removing an Attachment

1. Lower the attachment to the ground.
2. Stop the engine.
3. Disengage the quick attach pins by turning them to the outside.
4. If the attachment uses hydraulics, move the auxiliary hydraulics lever forward, backward, and back to neutral to relieve pressure at the hydraulic couplers.
5. If the attachment uses hydraulics, slide the collar back on the hydraulic couplers and disconnect them.

   Important: Connect the attachment hoses together to prevent hydraulic system contamination during storage.
6. Install the protective covers onto the hydraulic couplers on the traction unit.
7. Start the engine, tilt the mount plate forward, and back the traction unit away from the attachment.

Securing the Traction Unit for Transport

When transporting the traction unit on a trailer, always use the following procedure:

Important: Do not operate or drive the traction unit on roadways.

1. Lower the loader arms.
2. Stop the engine.
3. Secure the traction unit to the trailer with chains or straps using the operator platform support openings to secure the rear of the traction unit and the loader arms/mount plate to secure the front of the traction unit.

Maintenance

Note: Determine the left and right sides of the machine from the normal operating position.

Recommended Maintenance Schedule(s)

Maintenance Service Interval	Maintenance Procedure
After the first 8 operating hours	• Change the hydraulic filter. • Ensure that the wheel lug nuts are torqued to 50 ft-lb (68 N·m).
After the first 50 operating hours	• Change the engine oil (more often in dusty or sandy conditions).
Before each use or daily	• Drain water from the fuel filter. • Check the engine oil level. • Check the coolant level. • Check the tire pressure. • Test the parking brake. • Grease the traction unit. • Remove debris from the traction unit. • Check for loose fasteners.
Every 25 hours	• Check the hydraulic fluid level. • Clean the primary air filter (more often in dusty or sandy conditions). • Check the hydraulic lines.
Every 75 hours	• Change the engine oil (more often in dusty or sandy conditions). • Ensure that the wheel lug nuts are torqued to 50 ft-lb (68 N·m).
Every 100 hours	• Check the battery electrolyte level (replacement battery only). • Check the battery cable connections.
Every 150 hours	• Replace the oil filter (every 75 hours in hot, dusty, and/or sandy conditions). • Check the fan and alternator belt tension (refer to the Engine Operator's Manual).
Every 400 hours	• Change the hydraulic filter (for severe duty and rental applications, change every 200 operating hours or yearly whichever comes first).
Every 1,500 hours	• Replace all moving hydraulic lines.
Yearly	• Replace the primary and secondary filters (more often in dusty or sandy conditions). • Change the fuel filter. • Change the hydraulic fluid (for severe duty and rental applications, change every 400 operating hours or yearly whichever comes first). • Check the radiator coolant protection temperature. • Touch up chipped paint
Every 2 years	• Flush the radiator and coolant system and replace the coolant.

Important: Refer to your engine operator's manual for additional maintenance procedures.

Note: After 50 hours and every 75 hours thereafter (that is at 50, 125, 200, etc.) the hour meter displays SVC on the lower left side of the screen to remind you to change the oil and perform the required maintenance. After every 400 hours (400, 800, 1200, etc.), the hour meter displays SVC on the lower right side of the screen to remind you to perform the maintenance procedures based on a 400 hour schedule. These reminders come on starting three hours prior to the service interval time and flash at regular intervals for six hours.

If you leave the key in the ignition switch, someone could accidently start the engine and seriously injure you or other bystanders.

Remove the key from the ignition and disconnect the negative battery cable before you do any maintenance.

Premaintenance Procedures

Removing the Front Access Cover

1. Raise the loader arms and install the cylinder locks.

   Note: In the case that you need to remove the front access cover without raising the loader arms, be very careful not to damage the cover or hydraulic hoses as you maneuver the cover out from under the arms.
2. Stop the engine and remove the key.
3. Release the two locking tabs (Figure 21).

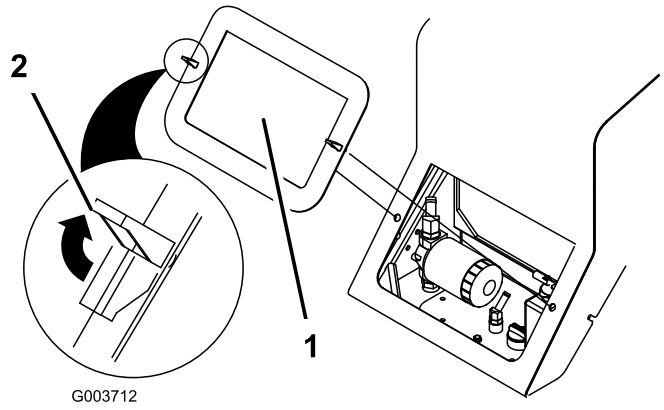

Figure 21

1. Front access cover
2. Locking tabs

4. Pull the cover off of the traction unit (Figure 21).
5. When finished, replace the front access cover and secure it with the two locking tabs.

Opening the Rear Access Cover

1. Stop the engine and remove the key.
2. Release the two locking tabs on top of the rear access cover (Figure 22).

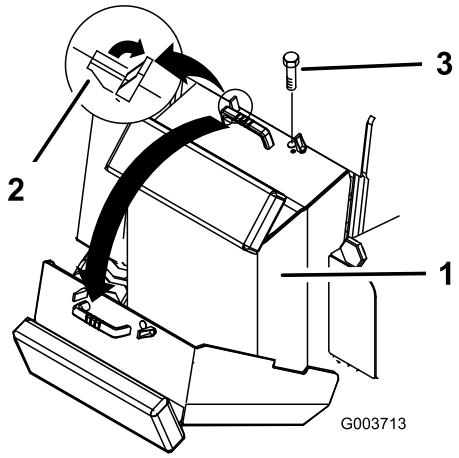

Figure 22

1. Rear access cover
2. Locking tabs
3. Bolt

3. Remove the bolt located next to the right locking tab (Figure 22).
4. Grasping the handle, pull the cover up and back to swing it open (Figure 22).
5. When finished, close the rear access cover by swinging it up and seating it in place.
6. Secure it with the two locking tabs and bolt.

Lubrication

Greasing the Traction Unit

Grease all pivot joints every 8 operating hours and immediately after every washing.

Grease Type: General-purpose grease.

1. Lower the loader arms and stop the engine. Remove the key.
2. Clean the grease fittings with a rag.
3. Connect a grease gun to each fitting (Figure 23 and Figure 24).

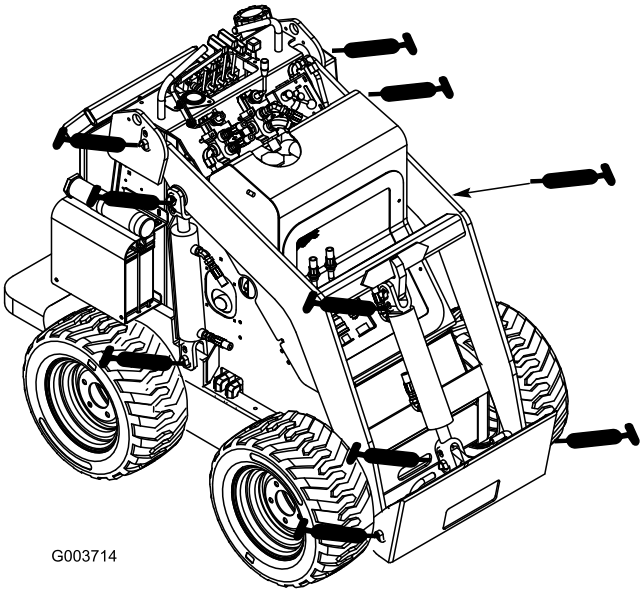

Figure 23

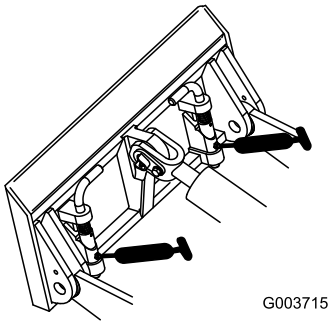

Figure 24

4. Pump grease into the fittings until grease begins to ooze out of the bearings (approximately 3 pumps).
5. Wipe up any excess grease.

Engine Maintenance

Servicing the Air Cleaner

Clean the primary filter every 25 operating hours. Replace the primary and secondary filter yearly.

Note: Service the air cleaner more frequently if operating conditions are extremely dusty or sandy.

Removing the Filters

1. Lower the loader arms and stop the engine. Remove the key.
2. Open the rear access cover.
3. Release the latches on the air cleaner and pull the air cleaner cover off of the air cleaner body (Figure 25).

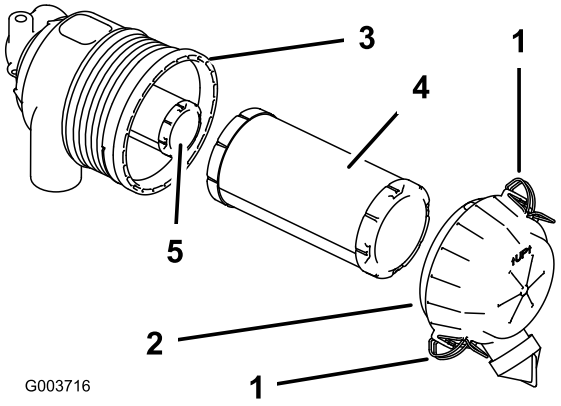

Figure 25

1. Latches
2. Air cleaner cover
3. Air filter body
4. Primary filter
5. Safety filter

4. Clean the inside of the air cleaner cover with compressed air.
5. Gently slide the primary filter out of the air cleaner body (Figure 25). Avoid knocking the filter into the side of the body. Do not remove the safety filter, unless you intend to replace it as well.
6. Inspect the primary filter for damage by looking into the filter while shining a bright light on the outside of the filter. Holes in the filter will appear as bright spots. If the filter is damaged, discard it; otherwise, clean it.

   Important: Never attempt to clean the safety filter. If the safety filter is dirty, then the primary filter is damaged and you should replace both filters.

Cleaning the Primary Filter

Blow compressed air from the inside to the outside of the primary filter.

Important: Do not exceed 100 psi (689 kPa) and keep the hose at least 2 inches (5 cm) from the filter.

Installing the Filters

1. If installing new filters, check each filter for shipping damage. Do not use a damaged filter.
2. If the safety filter is being replaced, carefully slide it into the filter body (Figure 25).

3. Carefully slide the primary filter over the safety filter (Figure 25). Ensure that it is fully seated by pushing on the outer rim of the filter while installing it.

   Important: Do not press on the soft inside area of the filter.

4. Install the air cleaner cover with the side indicated as UP facing up and secure the latches (Figure 25).
5. Close the rear access cover.

Servicing the Engine Oil

Change oil after the first 50 operating hours and then every 75 operating hours thereafter.

Note: Change oil more frequently when operating conditions are extremely dusty or sandy.

Oil Type: Diesel engine oil (API service CD or higher)

Crankcase Capacity: w/filter, 0.84 gal. (3.2 l)

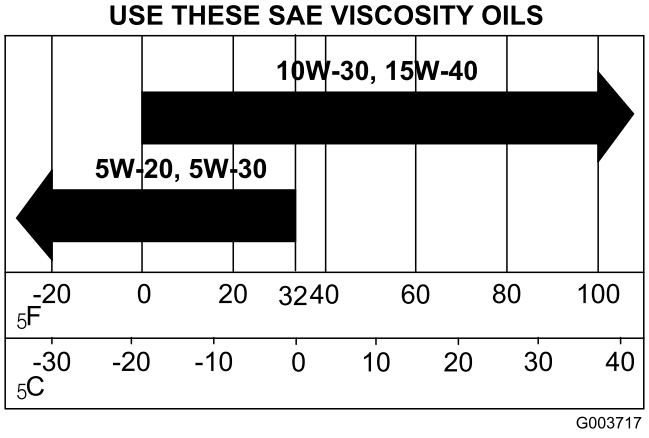

Figure 26

Changing Oil

1. Start the engine and let it run for five minutes. This warms the oil so it drains better.
2. Park the traction unit so that the drain side is slightly lower than the opposite side to ensure that the oil drains completely.
3. Lower the loader arms, chock the wheels, and stop the engine. Remove the key.

Components will be hot if the traction unit has been running. If you touch hot components you may be burned.

Allow the traction unit to cool before performing maintenance or touching components under the hood.

4. Place a pan under the oil drain tube (Figure 27).

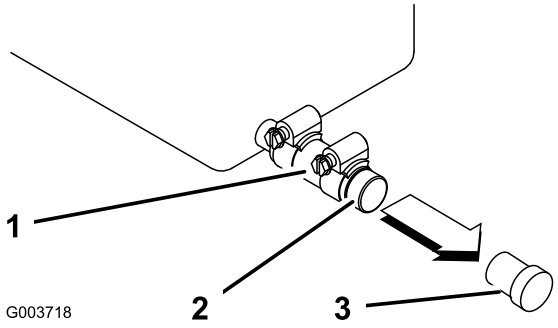

Figure 27

1. Clamp
2. Oil drain tube
3. Plug

5. Loosen the clamp and remove the plug (Figure 27).
6. When the oil has drained completely, replace the plug and tighten the clamp.

   Note: Dispose of the used oil at a certified recycling center.

7. Open the rear access cover.
8. Remove the oil fill cap and slowly pour approximately 80% of the specified amount of oil in through the valve cover.
9. Check the oil level; refer to Checking the Oil Level, in Operation.
10. Slowly add additional oil to bring the level to the upper mark/hole on the dipstick.
11. Replace the fill cap.
12. Close the rear access cover.

Changing the Oil Filter

Replace the oil filter every 150 hours or every other oil change.

Note: Change the oil filter at each oil change when operating conditions are extremely hot, dusty, or sandy.

1. Drain the oil from the engine; refer to Changing the Oil.
2. Open the rear access cover.
3. Remove the old filter and wipe the filter adapter (Figure 28) gasket surface.

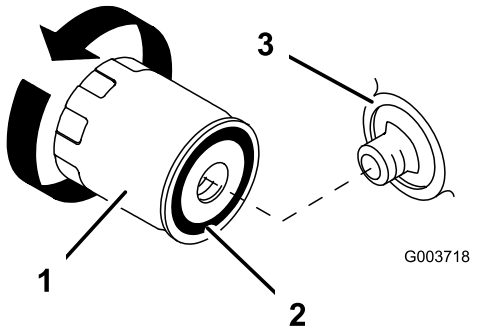

Figure 28

1. Oil filter
2. Gasket
3. Adapter

4. Allow a minute or two for the oil to be absorbed by filter material, then pour off the excess oil.
5. Apply a thin coat of new oil to the rubber gasket on the replacement filter (Figure 28).
6. Install the replacement oil filter to the filter adapter. Turn the oil filter clockwise until the rubber gasket contacts the filter adapter, then tighten the filter an additional 1/2 turn (Figure 28).
7. Fill the crankcase with the proper type of new oil; refer to Changing the Oil.
8. Close the rear access cover.

Fuel System Maintenance

Changing the Fuel Filter

Change the fuel filter yearly. Never install a dirty filter.

1. Lower the loader arms and stop the engine. Remove the key.
2. Shut off the fuel valve in the hose near the bottom of the fuel tank as illustrated in Figure 29).

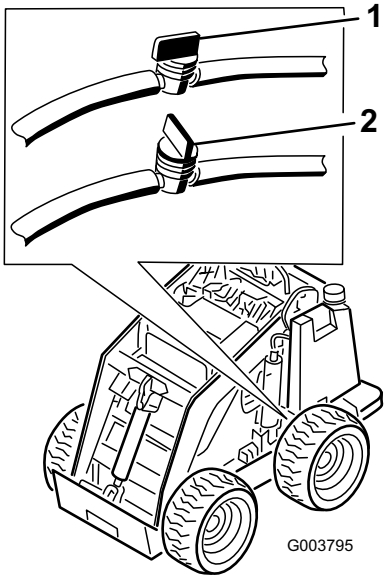

Figure 29

1. Fuel valve

3. Open the rear access cover.
4. Open the drain valve (Figure 30) and drain the fuel from the fuel filter into a suitable container and dispose of it properly.

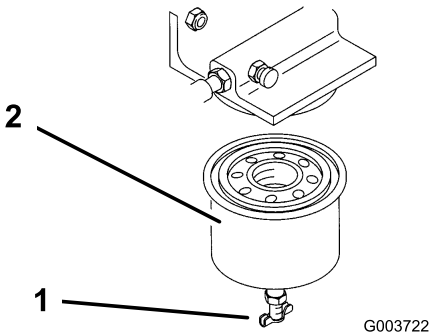

Figure 30

1. Drain valve
2. Fuel filter

5. Remove the fuel filter with a filter wrench (Figure 30).
6. Clean the mounting surface.
7. Lubricate the gasket on the new filter with clean engine oil. Screw on the new filter by hand until the gasket contacts the housing, then tighten it another 1/2 turn.
8. Open the fuel valve on the bottom of the fuel tank (Figure 29).
9. Bleed the fuel system; refer to Bleeding the Fuel System.

10. Close the rear access cover.
11. Start the engine and check for leaks.

Bleeding the Fuel System

Bleed the air from the fuel system in any of the following situations:

- Initial start up of a new traction unit or a traction unit that has been stored.
- After the engine has ceased running due to lack of fuel.
- After maintenance has been performed on the fuel system components.

1. Open the rear access cover.
2. Place a drain pan under the fuel filter to catch spills.
3. Open the bleed screw on top of the fuel filter to fill the bowl with fuel (Figure 31).

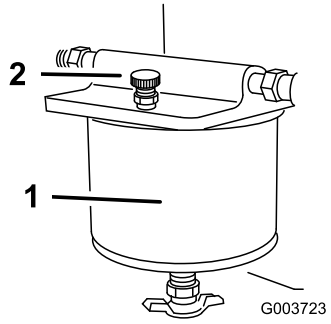

Figure 31

1. Fuel filter
2. Bleed screw

4. Close the bleed screw when fuel comes out in a steady stream.
5. On left side of the engine, locate the air vent plug on top of the fuel injection pump and connect a hose to it, leading to a drain pan.
6. Open the vent plug and crank the engine until fuel comes out a steady stream.
7. Close the vent plug.
8. Close the rear access cover.

Draining the Fuel Tank

In certain conditions, fuel is extremely flammable and highly explosive. A fire or explosion from gasoline can burn you and others and can damage property.

- **Drain fuel from the fuel tank when the engine is cold. Do this outdoors in an open area. Wipe up any spills.**
- **Never smoke when draining fuel, and stay away from an open flame or where a spark may ignite the fumes.**

1. Park the traction unit on a level surface, to ensure that the fuel tanks drain completely.
2. Lower the loader arms and stop the engine. Remove the key.
3. Shut off the fuel valve in the hose near the bottom of the fuel tank as illustrated in Figure 32.

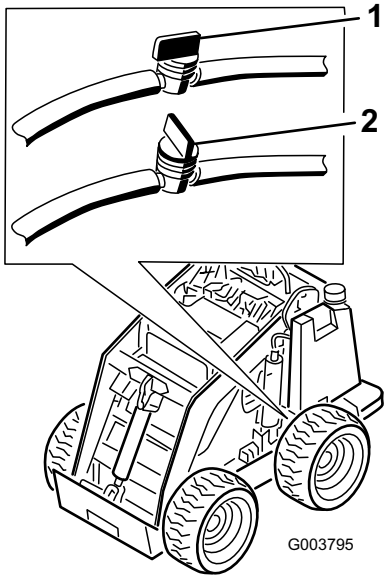

Figure 32

1. Fuel valve

4. Open the rear access cover.
5. Loosen the hose clamp at the fuel filter and slide it up the fuel line away from the filter.
6. Pull the fuel line off of the fuel filter, open the fuel valves, and allow the fuel to drain into a fuel can or drain pan.

Note: Now is the best time to install a new fuel filter because the fuel tank is empty.

7. Install the fuel line onto the fuel filter.
8. Slide the hose clamp close to the fuel filter to secure the fuel line.
9. Close the rear access cover.
10. Open the fuel valve on the bottom of the fuel tank.

Electrical System Maintenance

Servicing the Battery

Important: The following procedures apply when servicing a (dry) battery that has replaced the original battery. The original (wet) battery does not require service.

Check the electrolyte level in the battery every 100 hours. Always keep the battery clean and fully charged. Use a paper towel to clean the battery case. If the battery terminals are corroded, clean them with a solution of four parts water and one part baking soda. Apply a light coating of grease to the battery terminals to reduce corrosion.

Voltage: 12 v, 435 Cold Cranking Amps

Checking the Electrolyte Level

1. Stop the engine and remove the key.
2. Remove the 4 bolts securing the battery cover and remove it from over the battery.
3. Look at the side of the battery. The electrolyte must be up to the Upper line (Figure 33). Do not allow the electrolyte to fall below the Lower line (Figure 33).

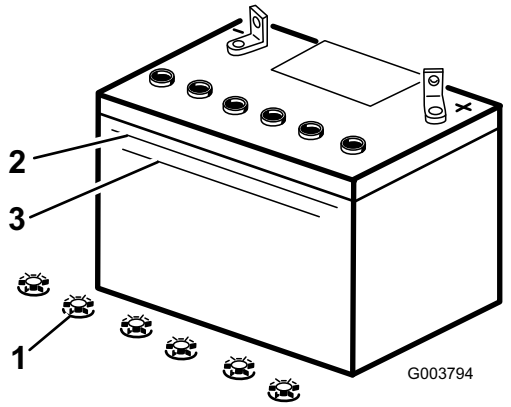

Figure 33

1. Filler caps
2. Upper line
3. Lower line

4. If the electrolyte is low, add the required amount of distilled water; refer to Adding Water to the Battery, below.

Adding Water to the Battery

The best time to add distilled water to the battery is just before you operate the traction unit. This lets the water mix thoroughly with the electrolyte solution.

Battery electrolyte contains sulfuric acid which is a deadly poison and causes severe burns.

- **Do not drink electrolyte and avoid contact with skin, eyes or clothing. Wear safety glasses to shield your eyes and rubber gloves to protect your hands.**
- **Fill the battery where clean water is always available for flushing the skin.**

1. Remove the battery from the traction unit.

   Important: Never fill the battery with distilled water while the battery is installed in the traction unit. Electrolyte could be spilled on other parts and cause corrosion.

2. Clean the top of the battery with a paper towel.
3. Remove the filler caps from the battery (Figure 33).
4. Slowly pour distilled water into each battery cell until the electrolyte level is up to the Upper line (Figure 33) on the battery case.

Important: Do not overfill the battery because electrolyte (sulfuric acid) can cause severe corrosion and damage to the chassis.

5. Wait five to ten minutes after filling the battery cells. Add distilled water, if necessary, until the electrolyte level is up to the Upper line (Figure 33) on the battery case.
6. Install the battery filler caps.

Charging the Battery

Charging the battery produces gasses that can explode.

Never smoke near the battery and keep sparks and flames away from battery.

Important: Always keep the battery fully charged (1.265 specific gravity). This is especially important to prevent battery damage when the temperature is below 325F (05C).

1. Check the electrolyte level; refer to Checking Electrolyte Level.
2. Make sure the filler caps are installed in the battery.
3. Charge the battery for 10 to 15 minutes at 25 to 30 amps or 30 minutes at 4 to 6 amps (Figure 34). Do not overcharge the battery.

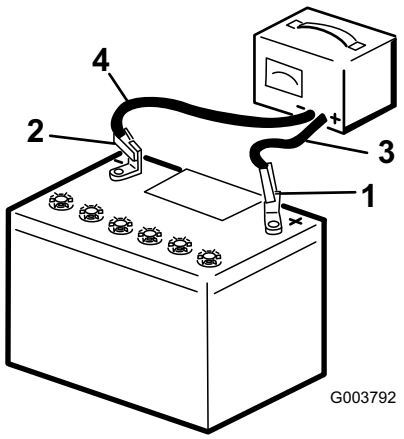

Figure 34

1. Positive battery post
2. Negative battery post
3. Red (+) charger lead
4. Black (-) charger lead

4. When the battery is fully charged, unplug the charger from the electrical outlet, then disconnect the charger leads from the battery posts (Figure 34).
5. Replace the battery cover.

Hydraulic System Maintenance

Changing the Hydraulic Filter

Change the hydraulic filter after the first 8 operating hours and every 400 operating hours thereafter.

1. Position traction unit on a level surface.
2. Raise the loader arms and install the cylinder locks.
3. Stop the engine and remove the key.
4. Remove the front access cover.

Important: Do not substitute an automotive oil filter or severe hydraulic system damage may result.

5. Place a drain pan under the filter.
6. Remove the old filter and wipe the filter adapter, gasket surface clean.
7. Apply a thin coat hydraulic fluid to the rubber gasket on the replacement filter (Figure 35).

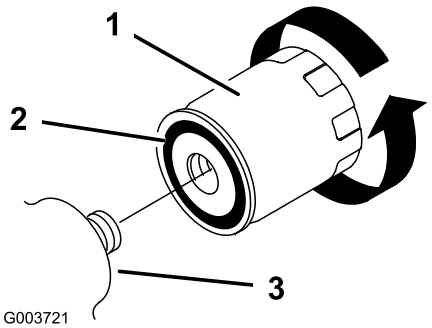

Figure 35

1. Hydraulic filter
2. Gasket
3. Adapter

8. Install the replacement hydraulic filter onto the filter adapter. Tighten it clockwise until the rubber gasket contacts the filter adapter, then tighten the filter an additional 1/2 turn (Figure 35).

9. Clean up any spilled fluid.
10. Start the engine and let it run for about two minutes to purge air from the system.
11. Stop the engine and check for leaks.
12. Check the fluid level in the hydraulic tank (refer to Checking the Hydraulic Fluid, in Operation) and add fluid to raise the level to the mark on the dipstick. Do not over fill the tank.
13. Install the front access cover.
14. Remove and store the cylinder locks and lower the loader arms.

Changing the Hydraulic Fluid

Change the hydraulic fluid yearly.

1. Position traction unit on a level surface.
2. Raise the loader arms and install the cylinder locks.
3. Stop the engine and remove the key.
4. Remove the front access cover.

   Important: Do not substitute automotive transmission fluid or severe hydraulic system damage may result.
5. Place a large drain pan under the traction unit that can hold at least 17 gal. (67 l).
6. Remove the drain plug from the bottom of the hydraulic tank and allow the fluid to completely drain out.
7. Install the drain plug.
8. Fill the hydraulic tank with 10W-30 or 15W-40 detergent, diesel engine oil (API service CH-4 or higher); refer to Checking the Hydraulic Fluid, in Operation.

   Note: Dispose of used oil at a certified recycling center.
9. Install the front access cover.
10. Remove and store the cylinder locks and lower the loader arms.

Checking the Hydraulic Lines

After every 25 operating hours, check the hydraulic lines and hoses for leaks, loose fittings, kinked lines, loose mounting supports, wear, weather, and chemical deterioration. Replace all moving hydraulic hoses every 1500 hours or 2 years, which ever comes first. Make necessary repairs before operating.

Hydraulic fluid escaping under pressure can penetrate skin and cause injury. Fluid injected into the skin must be surgically removed within a few hours by a doctor familiar with this form of injury or gangrene may result.

- **Keep your body and hands away from pin hole leaks or nozzles that eject high pressure hydraulic fluid.**
- **Use cardboard or paper to find hydraulic leaks, never use your hands.**

Cleaning

Removing Debris from the Traction Unit

Important: Operating the engine with a blocked radiator, may result in engine damage from overheating.

1. Park the traction unit on a level surface, raise the loader arms, and install the cylinder locks.
2. Stop the engine and remove the key.
3. Remove the front access cover.
4. Clean any debris from the grill.
5. Open the rear access cover.
6. Wipe away debris from the air cleaner.
7. Clean any debris build-up on the engine with a brush or blower before each use.

   Important: It is preferable to blow dirt out, rather than washing it out. If water is used, keep it away from electrical items and hydraulic valves. Do not use a high-pressure washer. High-pressure washing can damage the electrical system and hydraulic valves or deplete grease.
8. Replace and secure the front and rear access covers.
9. Remove and store the cylinder locks and lower the loader arms.

Storage

1. Lower the loader arms and stop the engine. Remove the key.
2. Remove dirt and grime from the external parts of the entire traction unit, especially the engine. Clean dirt and chaff from the outside of the engine.

   Important: You can wash the traction unit with mild detergent and water. Do not pressure wash the traction unit. Avoid excessive use of water, especially near the control panel, engine, hydraulic pumps, and motors.
3. Service the air cleaner; refer to Servicing the Air Cleaner.
4. Grease the traction unit; refer to Greasing the Traction Unit.
5. Change the crankcase oil; refer to Servicing the Engine Oil.
6. Check the tire pressure; refer to Checking the Tire Pressure.
7. Charge the battery; refer to Servicing the Battery.
8. Flush the fuel tank with fresh, clean diesel fuel.
9. Check and tighten all bolts, nuts, and screws. Repair or replace any part that is damaged.
10. Paint all scratched or bare metal surfaces. Paint is available from your Authorized Service Dealer.
11. Check antifreeze protection and fill the radiator with a 50/50 solution of water and permanent ethylene glycol antifreeze.
12. Store the traction unit in a clean, dry garage or storage area. Remove the key from the ignition switch and keep it in a memorable place.
13. Cover the traction unit to protect it and keep it clean.

Troubleshooting

Problem	Possible Cause	Corrective Action
The starter does not crank	1. The electrical connections are corroded or loose.	1. Check the electrical connections for good contact.
	2. A fuse is blown or loose.	2. Correct or replace the fuse.
	3. The battery is discharged.	3. Charge the battery or replace it.
	4. The relay or switch is damaged.	4. Contact your Authorized Service Dealer.
	5. A damaged starter or starter solenoid.	5. Contact your Authorized Service Dealer.
	6. Seized internal engine components.	6. Contact your Authorized Service Dealer.

Problem	Possible Cause	Corrective Action
The engine cranks, but will not start.	1. Incorrect starting procedure.	1. Refer to Starting and Stopping the Engine
	2. The fuel tank is empty.	2. Fill with fresh fuel.
	3. The fuel shut-off valve is closed.	3. Open the fuel shut-off valve.
	4. Dirt, water, stale fuel, or incorrect fuel is in the fuel system.	4. Drain and flush the fuel system; add fresh fuel.
	5. Clogged fuel line.	5. Clean or replace.
	6. There is air in the fuel.	6. Bleed the nozzles and check for air leaks at the fuel hose connections and fittings between the fuel tank and engine.
	7. Inoperative glow plugs.	7. Check the fuse, glow plugs, and wiring.
	8. Slow cranking speed.	8. Check the battery, oil viscosity, and starting motor (contact your Authorized Service Dealer).
	9. The air cleaner filters are dirty.	9. Service the air filters.
	10. The fuel filter is clogged.	10. Replace the fuel filter.
	11. Improper fuel grade for cold weather use.	11. Drain the fuel system and replace the fuel filter. Add fresh fuel of proper grade for ambient temperature conditions. You may need to warm the entire traction unit.
	12. Low compression.	12. Contact your Authorized Service Dealer.
	13. The injection nozzles are damaged.	13. Contact your Authorized Service Dealer.
	14. The injection pump timing is incorrect.	14. Contact your Authorized Service Dealer.
	15. The injection pump is broken.	15. Contact your Authorized Service Dealer.
	16. The ETR solenoid is broken.	16. Contact your Authorized Service Dealer.

Problem	Possible Cause	Corrective Action
The engine starts, but does not keep running.	1. The fuel tank vent is restricted.	1. Loosen the cap. If the engine runs with the cap loosened, replace the cap.
	2. Dirt or water is in the fuel system.	2. Drain and flush the fuel system; add fresh fuel.
	3. The fuel filter is clogged.	3. Replace the fuel filter.
	4. There is air in the fuel.	4. Bleed the nozzles and check for air leaks at fuel hose connections and fittings between the fuel tank and engine.
	5. Improper fuel grade for cold weather use.	5. Drain the fuel system and replace the fuel filter. Add fresh fuel of proper grade for ambient temperature conditions.
	6. The spark arrestor screen is clogged.	6. Clean or replace the spark arrestor screen.
	7. The fuel pump is damaged.	7. Contact your Authorized Service Dealer.
The engine runs, but knocks or misses.	1. Dirt, water, stale fuel, or incorrect fuel is in the fuel system.	1. Drain and flush the fuel system; add fresh fuel.
	2. Engine overheating.	2. Refer to Engine Overheats.
	3. There is air in the fuel.	3. Bleed nozzles and check for air leaks at the fuel hose connections and fittings between the fuel tank and engine.
	4. The injection nozzles are damaged.	4. Contact your Authorized Service Dealer.
	5. Low compression	5. Contact your Authorized Service Dealer.
	6. The injection pump timing is incorrect.	6. Contact your Authorized Service Dealer.
	7. Excessive carbon build-up.	7. Contact your Authorized Service Dealer.
	8. Internal wear or damage.	8. Contact your Authorized Service Dealer.

Problem	Possible Cause	Corrective Action
The engine will not idle.	1. The fuel tank vent is restricted.	1. Loosen the cap. If the engine runs with the cap loosened, replace the cap.
	2. Dirt, water, stale fuel, or incorrect fuel is in the fuel system.	2. Drain and flush the fuel system; add fresh fuel.
	3. The air cleaner filters are dirty.	3. Service the air filters.
	4. The fuel filter is clogged.	4. Replace the fuel filter.
	5. There is air in the fuel.	5. Bleed the nozzles and check for air leaks at fuel hose connections and fittings between the fuel tank and engine.
	6. The fuel pump is damaged.	6. Contact your Authorized Service Dealer.
	7. Low compression	7. Contact your Authorized Service Dealer.
The engine overheats.	1. More coolant is needed.	1. Check and add coolant.
	2. Restricted air flow to the radiator.	2. Inspect and clean the radiator screen with every use.
	3. The crankcase oil level is incorrect.	3. Fill or drain to the full mark.
	4. Excessive loading.	4. Reduce load; use lower ground speed.
	5. Incorrect fuel is in the fuel system.	5. Drain and flush the fuel system; add fresh fuel.
	6. The thermostat is damaged.	6. Contact your Authorized Service Dealer.
	7. The fan belt is loose or broken.	7. Contact your Authorized Service Dealer.
	8. Injection timing is incorrect.	8. Contact your Authorized Service Dealer.
	9. Coolant pump is damaged.	9. Contact your Authorized Service Dealer.

Problem	Possible Cause	Corrective Action
The engine loses power.	1. The engine load is excessive.	1. Reduce ground speed.
	2. The crankcase oil level is incorrect.	2. Fill or drain to the full mark.
	3. The air cleaner filters are dirty.	3. Service the air filters.
	4. Dirt, water, stale fuel, or incorrect fuel is in the fuel system.	4. Drain and flush the fuel system; add fresh fuel.
	5. Engine overheating.	5. Refer to Engine Overheats.
	6. The spark arrestor screen is clogged.	6. Clean or replace the spark arrestor screen.
	7. There is air in the fuel.	7. Bleed the nozzles and check for air leaks at fuel hose connections and fittings between the fuel tank and engine.
	8. Low compression	8. Contact your Authorized Service Dealer.
	9. The fuel tank vent is restricted.	9. Contact your Authorized Service Dealer.
	10. The injection pump timing is incorrect.	10. Contact your Authorized Service Dealer.
	11. The injection pump is damaged.	11. Contact your Authorized Service Dealer.
Excessive black smoke from exhaust.	1. Excessive loading.	1. Reduce load; use lower ground speed.
	2. The air cleaner filters are dirty.	2. Service the air filters.
	3. Incorrect fuel is in the fuel system.	3. Drain the fuel system and refill with specified fuel.
	4. The injection pump timing is incorrect.	4. Contact your Authorized Service Dealer.
	5. The injection pump is damaged.	5. Contact your Authorized Service Dealer.
	6. The injection nozzles are damaged.	6. Contact your Authorized Service Dealer.

Problem	Possible Cause	Corrective Action
Excessive white smoke from exhaust.	1. The key was turned to the start position before the glow plug light turned off.	1. Turn the key to the run position and allow the glow plug light to turn off before starting the engine.
	2. The engine temperature is low.	2. Check the thermostat.
	3. The glow plugs are inoperative.	3. Check the fuse, glow plugs and wiring.
	4. The injection pump timing is incorrect.	4. Contact your Authorized Service Dealer.
	5. The injection nozzles are damaged.	5. Contact your Authorized Service Dealer.
	6. Low compression	6. Contact your Authorized Service Dealer.
Traction unit does not drive.	1. The parking brake is on.	1. Release the parking brake.
	2. Hydraulic fluid level low.	2. Add hydraulic fluid to the reservoir.
	3. The tow valves are open.	3. Close the tow valves.
	4. Flow divider valve lever is in 9 o'clock position.	4. Move lever to 12 o'clock to 10 o'clock position.
	5. Traction pump drive coupler is loose or broken.	5. Contact your Authorized Service Dealer.
	6. Pump and/or wheel motor is damaged.	6. Contact your Authorized Service Dealer.
	7. Control valve is damaged.	7. Contact your Authorized Service Dealer.
	8. Relief valve is damaged.	8. Contact your Authorized Service Dealer.