FORM NO. 3313-631

TORO®

MODEL NO. 62008-8000001 & up

PARTS CATALOG

T800 GENERATOR

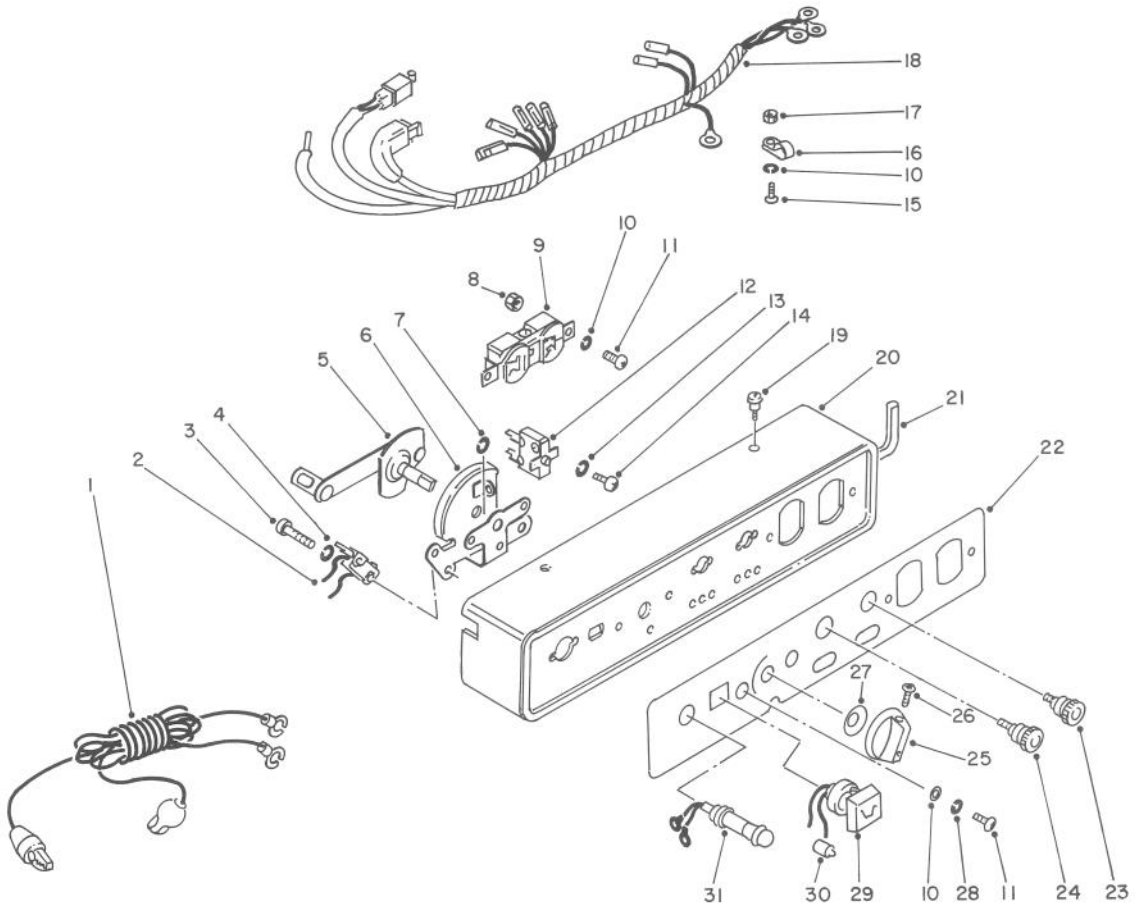

CONTROL PANEL

C-0074-88

Ref. No.	Part No.	Description	No. Used
1	55-2160	Cord — Charger (optional)	1
2	55-2140	Switch — Engine	1
3	55-2150	Screw	2
4	50-0590	Washer	2
5	55-2120	Shaft — Fuel Cock Knob	1
6	55-2100	Bracket — Fuel Cock Knob	1
7	55-2130	E-Ring	1
8	55-2040	Nut	2
9	50-4490	Receptacle	1
10	50-0600	Washer	6
11	53-1080	Screw	5
12	55-2020	Protector — Circuit (6.3A)	1
*	55-2030	Protector — Circuit (10A)	1
13	50-6750	Washer	4
14	50-8710	Screw	4
15	50-0240	Screw	1

Ref. No.	Part No.	Description	No. Used
16	55-2060	Clamp	1
17	50-0500	Nut	1
18	55-2050	Wiring Harness Control	1
19	55-2000	Screw	4
20	55-1980	Panel — Control	1
21	55-2010	Seal (L:421)	2
22	55-1990	Plate — Panel	1
23	50-4540	Terminal (+)	1
24	50-4550	Terminal (−)	1
25	55-2070	Knob — Fuel	1
26	55-2080	Screw	1
27	55-2090	Wave Washer	1
28	55-2110	Washer — Lock	3
29	50-3480	Lamp Assy. — Oil Low Level	1
30	50-3490	Bulb	1
31	50-9140	Lamp Assy. — Pilot	1

*Not Illustrated

©The TORO Company — 1988

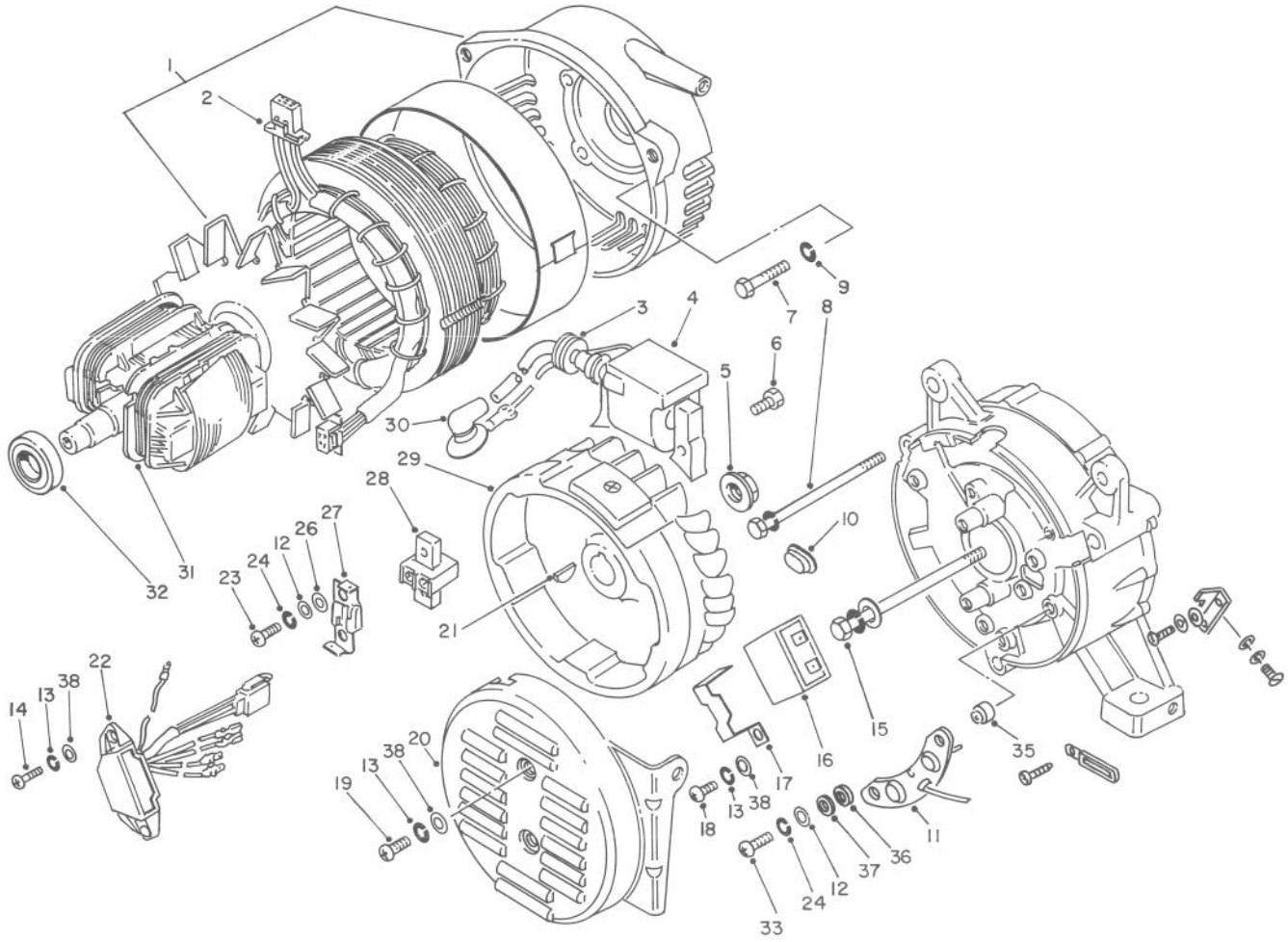

MAGNETO - GENERATOR

C-0075-88

Ref. No.	Part No.	Description	No. Used
1	55-1830	Generator Assy. (120V, 60Hz)	1
2	55-1950	Stator — Generator (120V)	1
3	53-0840	Grommet	1
4	55-1960	Coil (Incl. Ref. #3)	1
5	50-0540	Nut	1
6	53-8060	Bolt	2
7	50-0070	Bolt	4
8	55-1870	Bolt — Stator	3
9	50-5730	Washer — Lock	4
10	53-0870	Plug — High Tension Hole	1
11	50-4100	Diode	1
12	50-0600	Washer	4
13	81-1380	Washer — Lock	5
14	55-3390	Screw	2
15	55-1860	Bolt — Rotor	1
16	55-1890	Capacitor	1
17	55-1900	Bracket	1
18	50-0280	Screw	1

Ref. No.	Part No.	Description	No. Used
19	50-0290	Screw	2
20	55-1850	Cover — Rear	1
21	50-0640	Key	1
22	55-1940	Regulator — Voltage	1
23	81-4550	Screw	2
24	81-1420	Washer — Lock	6
26	50-1930	Bushing	2
27	55-1920	Brush	2
28	55-1910	Holder — Brush	1
29	53-0850	Rotor	1
30	55-1970	Cap — Spark Plug	1
31	55-1840	Rotor (Inc. Ref. #32)	1
32	50-0480	Bearing	1
33	81-2890	Screw	2
35	70-0790	Bushing	2
36	70-0780	Washer — Insulator	2
37	50-4150	Washer — Insulator	2
38	70-0290	Washer	5

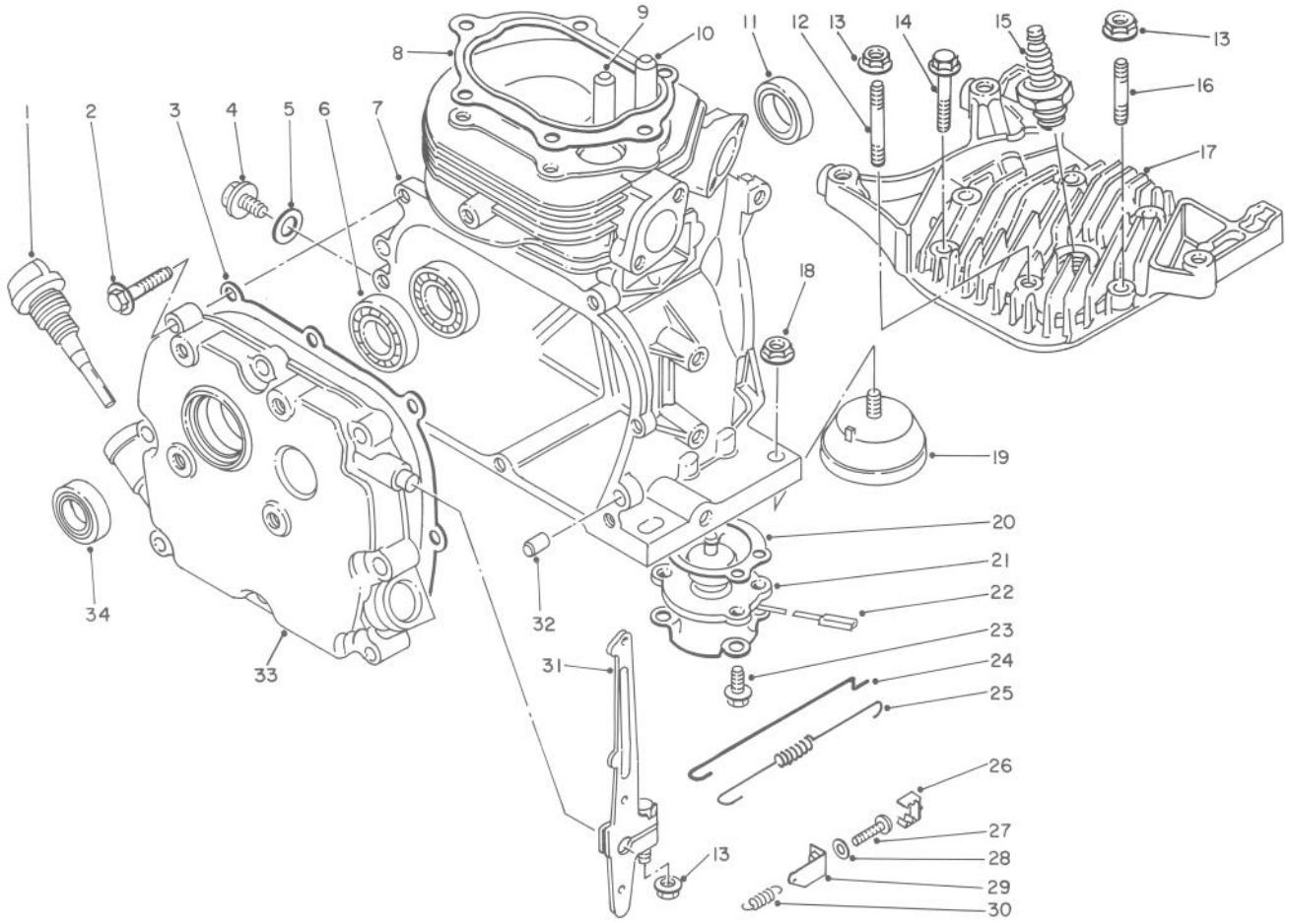

CYLINDER ASSEMBLY

C-0076-88

Ref. No.	Part No.	Description	No. Used
1	53-0120	Gauge — Oil Level	1
2	53-0130	Bolt	8
3	53-0110	Gasket	1
4	81-4970	Plug — Oil Drain	1
5	50-0780	Gasket	1
6	55-0590	Bearing	2
7	53-0060	Cylinder Assembly	1
8	53-0020	Gasket	1
9	53-0080	Guide — Exhaust Valve	1
10	53-0070	Guide — Intake Valve	1
11	50-0860	Oil Seal	1
12	53-0040	Stud Bolt	1
13	50-7180	Nut	3
14	53-1490	Bolt	4
15	81-0180	Spark Plug (NGK, BPMR6A)	1
16	53-0030	Stud Bolt	1
17	55-1210	Cylinder Head	1
18	50-7010	Nut	4

Ref. No.	Part No.	Description	No. Used
19	55-1230	Mounting Engine	4
20	50-3520	Gasket	1
21	55-0030	Sensor — Oil Level	1
22	50-3540	Plate	1
23	50-6190	Bolt	4
24	50-3300	Rod — Carburetor	1
25	55-1280	Spring	1
26	55-1270	Cap	1
27	55-1250	Screw	1
28	55-1260	Washer	1
29	55-1240	Hook — Governor	1
30	53-0250	Spring	1
31	53-0140	Lever — Throttle Control	1
32	50-0450	Pin	2
33	53-0100	Cover — Crankcase Side	1
34	50-0860	Oil Seal	1
*	55-1290	Gasket Set (Optional)	1

*Not Illustrated

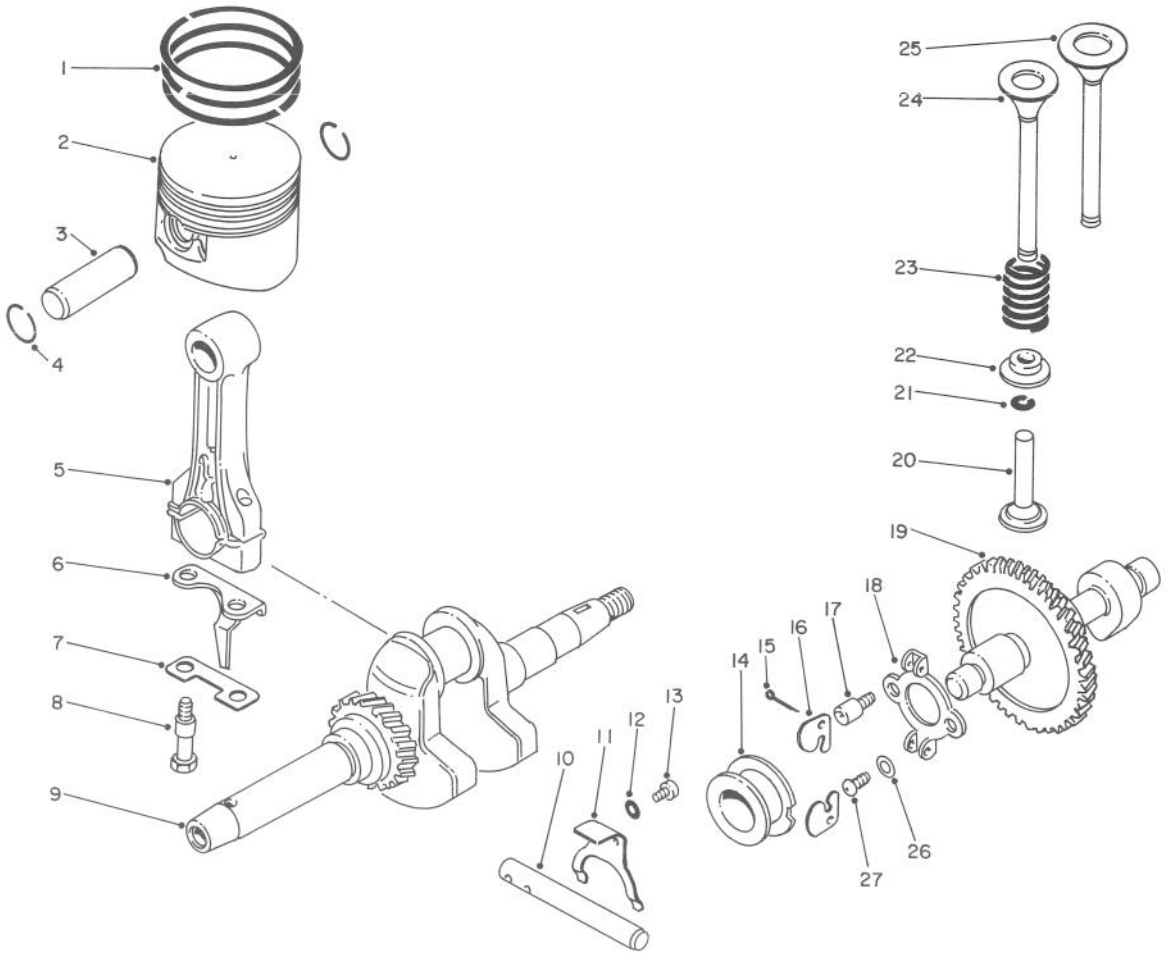

CRANK SHAFT & CAM SHAFT

C-0077-88

Ref. No.	Part No.	Description	No. Used
1	53-0300	Ring Set — Piston Std.	1
*	53-0310	Ring Set — Piston O.S. 0.25 (optional)	1
*	53-0320	Ring Set — Piston O.S. 0.5 (optional)	1
2	53-0270	Piston Std.	1
*	53-0280	Piston O.S. 0.25 (optional)	1
*	53-0290	Piston O.S. 0.5 (optional)	1
3	53-0330	Pin — Piston	1
4	50-0950	Snap Ring	2
5	53-0340	Rod — Connecting (Incl. Ref. #6-8)	1
6	53-0370	Plate — Splasher	1
7	53-0360	Plate — Lock	1
8	53-0350	Bolt	2
9	55-1300	Crankshaft	1
10	53-0480	Shaft- Throttle Return	1
11	53-0490	Plate — Sifter	1

Ref. No.	Part No.	Description	No. Used
12	50-0590	Washer	2
13	50-0220	Screw	2
14	50-3120	Spacer	1
15	50-0420	Cotter Pin	2
16	50-3080	Arm — Centrifugal	12
17	50-3100	Bolt	1
18	50-3090	Bracket	1
19	53-0710	Cam Shaft	1
20	53-0420	Tappet (L:33)	2
*	53-0430	Tappet (L:32.93)	2
*	53-0440	Tappet (L:33.07)	2
21	50-2170	Cotter — Valve	2
22	50-2150	Retainer — Valve Spring	2
23	53-0470	Spring — Valve	2
24	53-0460	Valve — Exhaust	1
25	53-0450	Valve — Intake	1
26	50-0600	Washer	1
27	81-1410	Screw	1

*Not Illustrated

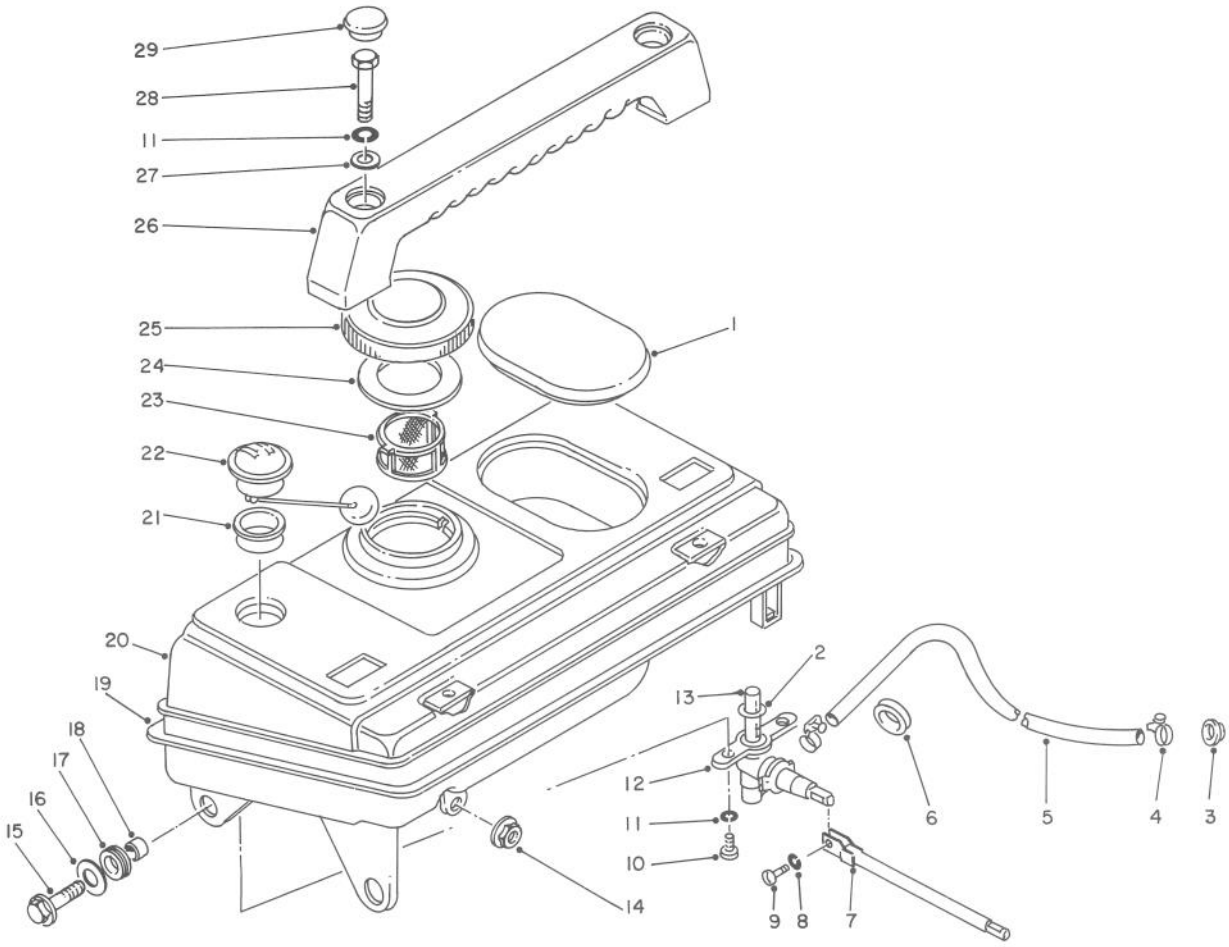

FUEL TANK ASSEMBLY

C-0078-88

Ref. No.	Part No.	Description	No. Used
1	55-1680	Cap	1
2	55-1760	O-Ring	1
3	55-1730	Grommet	1
4	55-1710	Clip	2
5	55-1700	Hose — Fuel	1
6	55-1720	Grommet	1
7	55-1770	Rod — Fuel Cock	1
8	50-0560	Washer — Lock	1
9	50-0220	Screw	1
10	53-0670	Screw	2
11	53-0680	Washer — Lock	4
12	55-1740	Cock Assembly — Fuel (Incl. Ref. #2 & 13)	1
13	55-1750	Net	1
14	50-7180	Nut	1
15	53-0860	Bolt	4

Ref. No.	Part No.	Description	No. Used
16	50-0760	Washer	4
17	50-0890	Cushion	4
18	55-1690	Spacer	4
19	55-1670	Molding	1
20	55-1650	Tank Assembly — Fuel	1
21	50-3850	Gasket	1
22	55-1660	Gauge Assembly — Fuel (Incl. Ref. #21)	1
23	55-0260	Filter	1
24	53-1420	Gasket	1
25	50-3700	Cap	1
26	55-1780	Grip	1
27	55-1810	Washer	2
28	55-1800	Bolt	2
29	55-1790	Cap	2
*	55-1820	Tool Assembly	1

*Not Illustrated

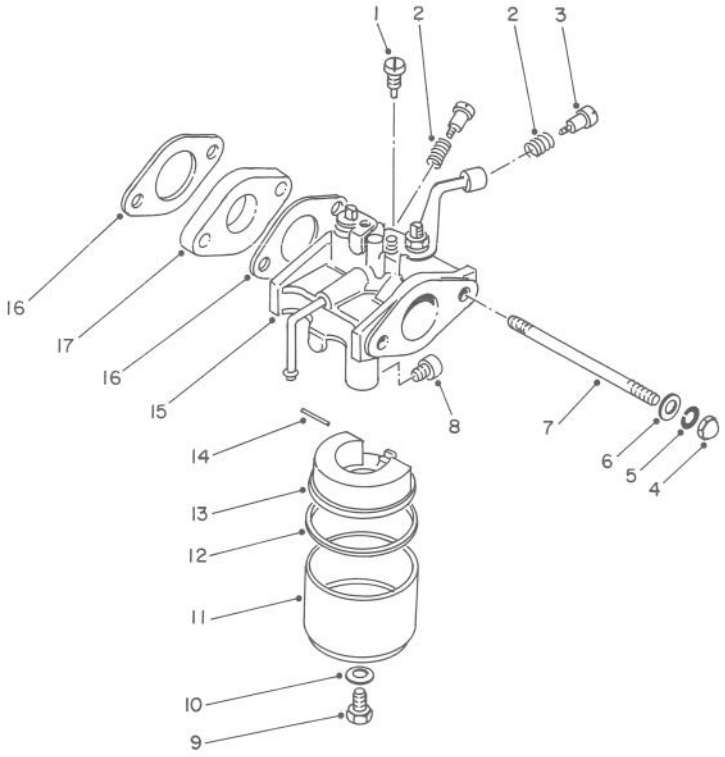

CARBURETOR

C-0079-88

Ref. No.	Part No.	Description	No. Used
1	50-1220	Jet — Pilot (42.5)	1
2	50-2340	Spring	2
3	50-0250	Screw	1
4	55-1350	Nut	2
5	55-1360	Washer — Lock	2
6	55-1370	Washer	2
7	55-1340	Stud Bolt	2
8	55-1330	Jet — Main (57.5)	1
9	50-2250	Bolt	1

Ref. No.	Part No.	Description	No. Used
10	50-2260	Gasket	1
11		Bowl — Float	1
12	50-2280	Gasket	1
13	55-1320	Float	1
14	81-0980	Pin	1
15	55-1310	Carburetor Assembly (Incl. Ref. #1-14 & 16-18)	1
16	50-2450	Gasket	2
17	53-0540	Insulator	1

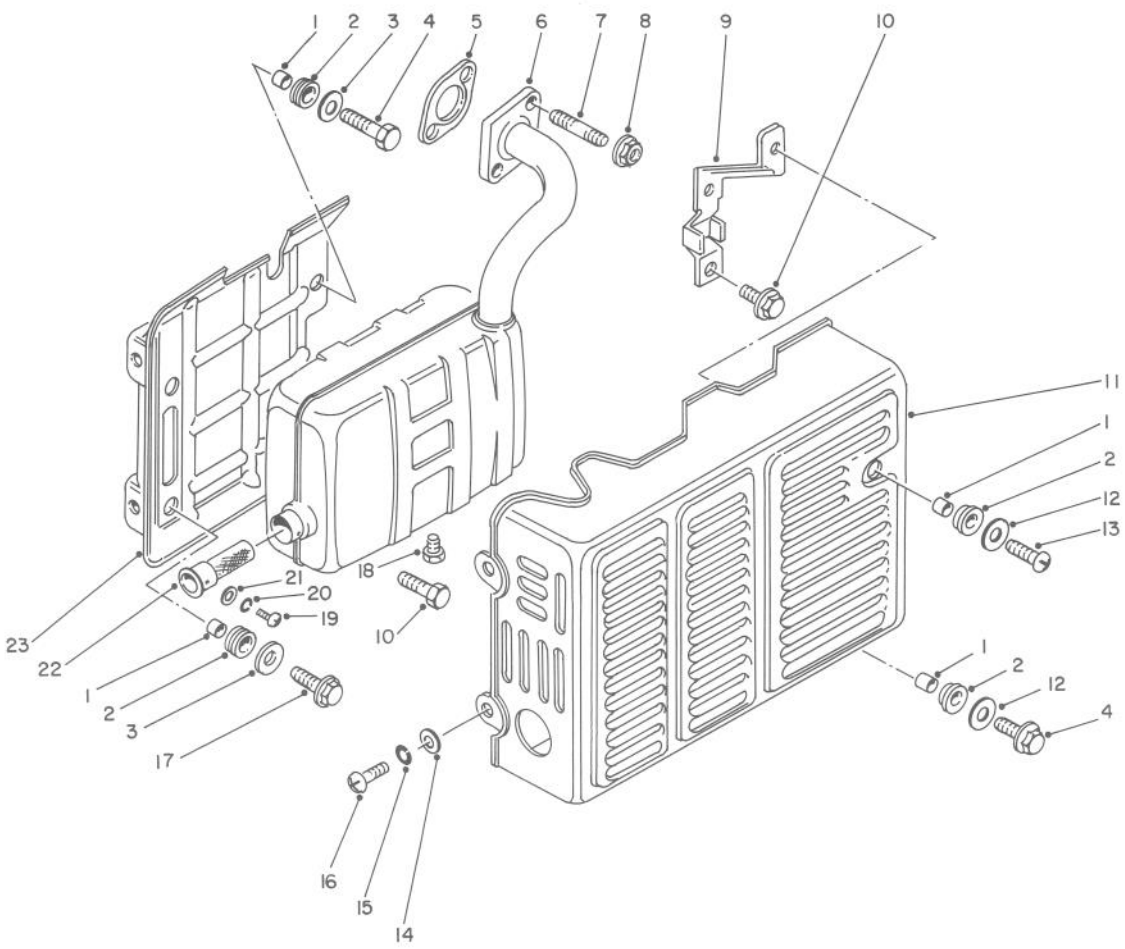

EXHAUST

C-0080-88

Ref. No.	Part No.	Description	No. Used
1	55-1500	Spacer	4
2	55-1510	Cushion	4
3	55-1540	Washer	2
4	53-0860	Bolt	2
5	53-0620	Gasket	1
6	55-1450	Muffler	1
7	50-7170	Stud Bolt	2
8	50-7180	Nut	2
9	55-1550	Bracket — Governor Spring	1
10	50-6320	Bolt	3
11	55-1480	Cover — Front	1
12	55-1490	Washer	2

Ref. No.	Part No.	Description	No. Used
13	50-8340	Screw	1
14	55-1370	Washer	2
15	55-1360	Washer — Lock	3
16	55-1520	Screw	2
17	50-7680	Bolt	2
18	55-1470	Plug — Drain	1
19	81-1410	Screw — Spark Arrestor	1
20	81-1420	Washer — Lock	1
21	50-0600	Washer	1
22	55-1460	Spark Arrestor	1
23	55-1530	Cover — Rear	1

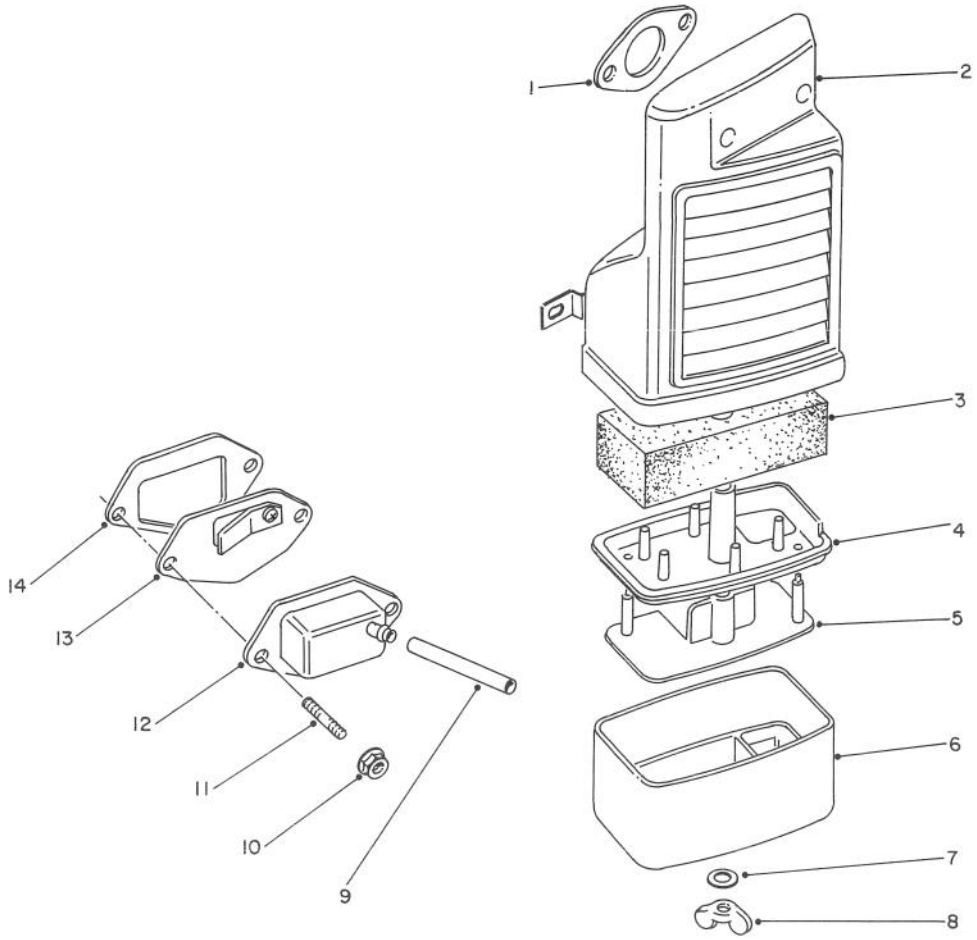

AIR CLEANER

C-0081-88

Ref. No.	Part No.	Description	No. Used
1	50-2450	Gasket	1
2	55-1380	Air Cleaner Assembly (Incl. Ref. #1 & 3-8)	1
3	55-1390	Filter	1
4	55-1410	Partition (B)	1
5	55-1400	Partition (A)	1
6	55-1420	Cap	1
7	50-0610	Washer	1

Ref. No.	Part No.	Description	No. Used
8	55-0550	Nut	1
9	50-0940	Hose — Air Breather	1
10	50-7180	Nut	2
11	50-7170	Stud Bolt	2
12	53-0500	Cap — Air Breather	1
13	55-1440	Reed Valve Assembly	1
14	53-0510	Gasket	2

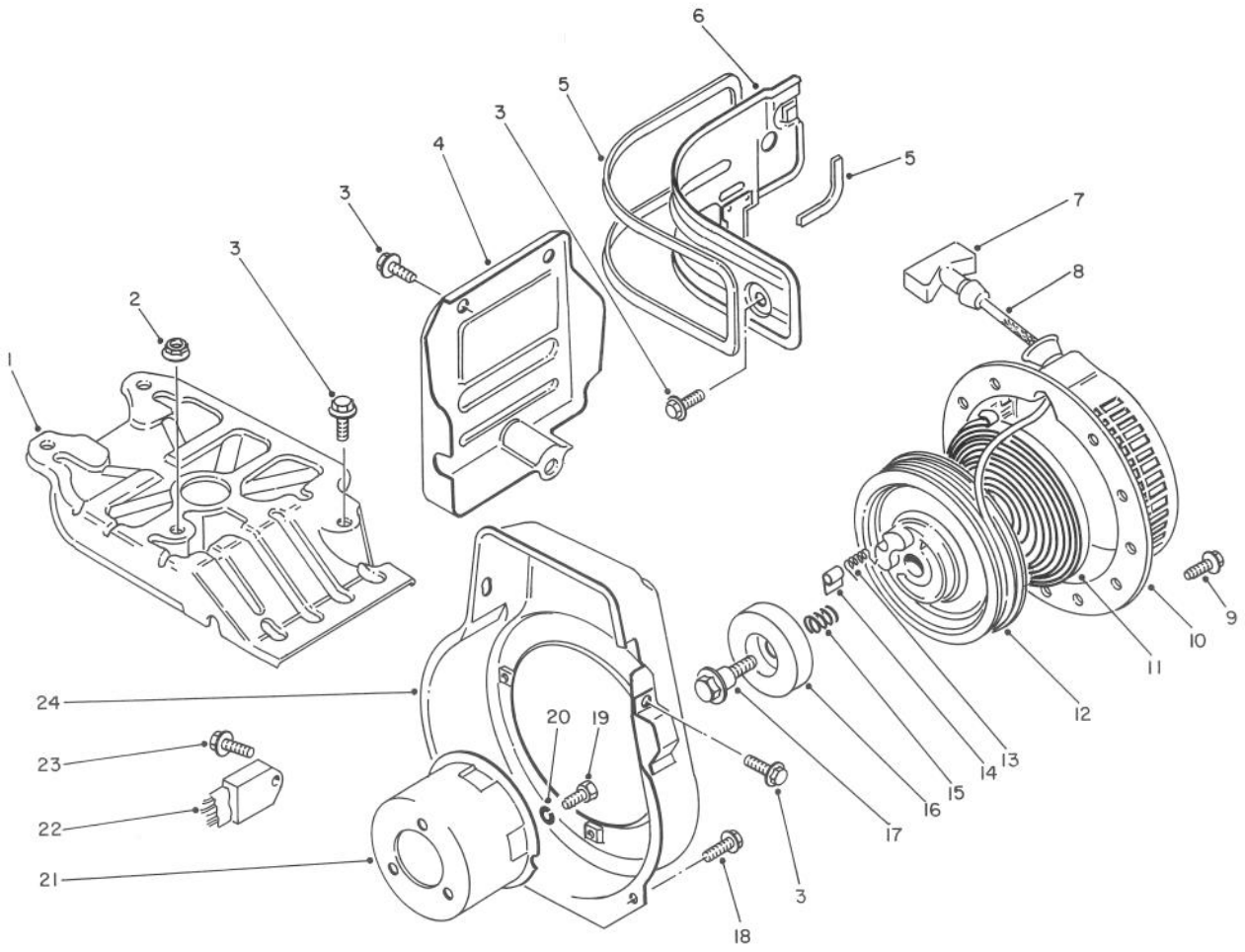

RECOIL STARTER

C-0082-88

Ref. No.	Part No.	Description	No. Used
1	55-1590	Cowling — Upper	1
2	50-7180	Nut	1
3	50-6320	Bolt	11
4	55-1620	Cover — Unit	1
5	55-1580	Seal	2
6	55-1570	Cowling — Ventilation Side	1
7		Grip	1
8	53-0730	Grip Assembly (Incl. Ref. #7)	1
9	53-0690	Bolt	3
10	55-1600	Starter Assembly — Recoil (Incl. Ref. #10-17)	1
11	53-0720	Spring	1
12	53-1470	Reel	1
13	81-1220	Spring — Ratchet	1

Ref. No.	Part No.	Description	No. Used
14	81-1230	Ratchet	1
15	81-1240	Spring — Friction	1
16	81-1250	Plate — Friction	1
17	81-1260	Bolt	1
18	50-6470	Bolt	1
19	53-0670	Screw	3
20	53-0680	Washer — Lock	3
21	53-0660	Pulley	1
22	55-1640	Unit — Oil Level Alarm	1
23	50-0170	Bolt	1
24	55-1560	Cover — Cooling Fan	1
*	50-5340	Cap — Harness	1
*	50-1100	Clamp	1

*Not Illustrated

PRODUCT CHANGES

In an effort to make improvements available to TORO owners as quickly as possible, minor changes are incorporated into Toro's products from time to time that do not become immediately shown in the Parts Catalog. If such a change apparently has been made in your unit, which is not reflected in your manual, see your TORO Distributor or his Authorized TORO Service Dealer for information and part numbers.

IDENTIFICATION AND ORDERING

MODEL AND SERIAL NUMBERS

The T-800 has two identification numbers: a model number and a serial number. The two numbers are stamped on a decal which is located on the bottom side of cooling fan cover. In any correspondence concerning the T-800, supply model and serial numbers to assure that correct information and replacement parts are obtained.

To order replacement parts from an Authorized TORO Service Dealer, supply the following information:

1. Model and serial number of the T-800.
2. Part number, description, and quantity of part(s) desired.

Note: Do not order by reference number if a parts catalog is being used; use the PART NUMBER.

The Toro Promise

A TWO YEAR LIMITED WARRANTY

The Toro Company promises to repair your TORO Product if defective in materials or workmanship. The following time periods from the date of purchase apply:

Residential Product ..... 2 Years
Residential Products Used Commercially... 45 Days

The costs of parts and labor are included, but the customer pays the transportation costs. Just return any residential product to an Authorized TORO Service Dealer or TORO Distributor.

Should you feel your TORO Product is defective and wish to rely on The Toro Promise, the following procedure is recommended:

1. Contact any Authorized TORO Service Dealer, TORO Master Service Dealer, or TORO Distributor (the Yellow Pages of your telephone directory is a good reference source).
2. He will either instruct you to return the product to him or recommend another Authorized TORO Service outlet which might be more convenient.
3. Bring the product along with your original sales slip, or other evidence of purchase date, to the service dealer.
4. The servicing dealer will inspect the unit, advise you whether the product is defective and, if so, make all repairs necessary to correct the defect without extra charge to you.

If for any reason you are dissatisfied with the dealer's analysis of the defect or the service performed, you may contact us.

Write:

TORO Consumer Service Department
8111 Lyndale Avenue South
Minneapolis, Minnesota 55420

The above remedy of product defects through repair by an Authorized TORO Service Dealer is the purchaser's sole remedy for any defect.

THERE IS NO OTHER EXPRESS WARRANTY. ALL IMPLIED WARRANTIES OF MERCHANTABILITY AND FITNESS FOR USE ARE LIMITED TO THE DURATION OF THE EXPRESS WARRANTY.

Some states do not allow limitations on how long an implied warranty lasts, so the above limitation may not apply to you.

This warranty applies only to parts or components which are defective and does not cover repairs necessary due to normal wear, misuse, accidents, or lack of proper maintenance. Regular, routine maintenance of the unit to keep it in proper operating condition is the responsibility of the owner.

All warranty repairs reimbursable under The Toro Promise must be performed by an Authorized TORO Service Dealer using Toro approved replacement parts.

Repairs or attemped repairs by anyone other than an Authorized TORO Service Account are not reimbursable under The Toro Promise. In addition, these unauthorized repair attempts may result in additional malfunctions, the correction of which is not covered by warranty.

THE TORO COMPANY IS NOT LIABLE FOR INDIRECT, INCIDENTAL OR CONSEQUENTIAL DAMAGES IN CONNECTION WITH THE USE OF THE PRODUCT INCLUDING ANY COST OR EXPENSE OF PROVIDING SUBSTITUTE EQUIPMENT OR SERVICE DURING PERIODS OF MALFUNCTION OR NON-USE.

Some states do not allow the exclusion or limitation of incidental or consequential damages, so the above limitation or exclusion may not apply to you.

This warranty gives you specific legal rights, and you may also have other rights which vary from state to state.

COUNTRIES OTHER THAN THE UNITED STATES OR CANADA

Customers who have purchased TORO products exported from the United States or Canada should contact their TORO Distributor (Dealer) to obtain guarantee policies for your country, province or state. If for any reason you are dissatisfied with your Distributor's service or have difficulty obtaining guarantee information, contact the TORO importer. If all other remedies fail, you may contact us at The Toro Company.

Compliance with Radio Interference Regulations Certified.
Certifie Conforme au Reglement sur le Brouillage Radioelectrique.

MAINTENANCE RECORD

MAINTENANCE RECORD

AL-881947-R
Litho U.S.A.