Form No. 3353-581 Rev C

CCR™ 3650 GTS® Snowthrower

Model No. 38518—Serial No. 260000001 and Up

Operator's Manual

Introduction

Read this information carefully to learn how to operate and maintain your product properly and to avoid injury and product damage. You are responsible for operating the product properly and safely.

You may contact Toro directly at www.Toro.com for product and accessory information, help finding a dealer, or to register your product.

Whenever you need service, genuine Toro parts, or additional information, contact an Authorized Service Dealer or Toro Customer Service and have the model and serial numbers of your product ready. Figure 1 identifies the location of the model and serial numbers on the product. Write the numbers in the space provided.

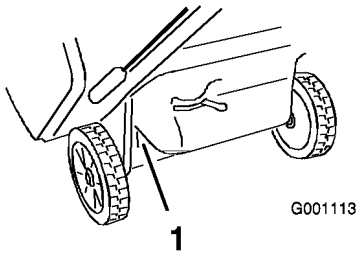

Figure 1

1. Model and serial number location

Model No. _____

Serial No. _____

This manual identifies potential hazards and has safety messages identified by the safety alert symbol (Figure 2), which signals a hazard that may cause serious injury or death if you do not follow the recommended precautions.



Figure 2

1. Safety alert symbol

This manual uses 2 other words to highlight information. **Important** calls attention to special mechanical information and **Note** emphasizes general information worthy of special attention.

Warning

CALIFORNIA
Proposition 65 Warning

The engine exhaust from this product contains chemicals known to the State of California to cause cancer, birth defects, or other reproductive harm.

This spark ignition system complies with Canadian ICES-002

Safety

This snowthrower meets or exceeds the B71.3 specifications of the American National Standards Institute in effect at the time of production.

Read and understand the contents of this manual before the engine is ever started.

⚠This is the safety alert symbol. It is used to alert you to potential personal injury hazards. Obey all safety messages that follow this symbol to avoid possible injury or death.

Improperly using or maintaining this snowthrower could result in injury or death. To reduce this potential, comply with the following safety instructions.

The following instructions have been adapted from the ANSI/OPEI standard B71.3-2005 and the ISO 8437:1989 standard.

This snowthrower is capable of amputating hands and feet and throwing objects. Failure to observe the following safety instructions could result in serious injury.

Training

- Read, understand and follow all instructions on the machine and in the manual(s) before operating this unit. Be thoroughly familiar with the controls and the proper use of the equipment. Know how to stop the unit and disengage the controls quickly.
- Never allow children to operate the equipment. Never allow adults to operate the equipment without proper instruction.

© 2005—The Toro® Company
8111 Lyndale Avenue South
Bloomington, MN 55420

Register at www.Toro.com.

Original Instructions (EN)
Printed in the USA
All Rights Reserved

- Keep the area of operation clear of all persons, particularly small children.
- Exercise caution to avoid slipping or falling.

Preparation

- Thoroughly inspect the area where the equipment is to be used and remove all doormats, sleds, boards, wires, and other foreign objects.
- Release the control bar to disengage the rotor blades before starting the engine.
- Do not operate the equipment without wearing adequate winter garments. Avoid loose fitting clothing that can get caught in moving parts. Wear footwear that will improve footing on slippery surfaces.
- Handle fuel with care; it is highly flammable.
  - Use an approved fuel container.
  - Never add fuel to a running engine or hot engine.
  - Fill fuel tank outdoors with extreme care. Never fill fuel tank indoors.
  - Never fill containers inside a vehicle or on a truck or trailer bed with a plastic liner. Always place containers on the ground, away from your vehicle, before filling.
  - When practical, remove gas-powered equipment from the truck or trailer and refuel it on the ground. If this is not possible, then refuel such equipment on a trailer with a portable container, rather than from a gasoline dispenser nozzle.
  - Keep the nozzle in contact with the rim of the fuel tank or container opening at all times, until refueling is complete. Do not use a nozzle lock-open device.
  - Replace gasoline cap securely and wipe up spilled fuel.
  - If fuel is spilled on clothing, change clothing immediately.
- Use extension cords and receptacles as specified by Toro for all units with electric starting motors.
- Do not attempt to clear snow from a gravel or crushed rock surface. This product is intended for use only on paved surfaces.
- Never attempt to make any adjustments while the engine is running (except when specifically recommended by Toro).
- Always wear safety glasses or eye shields during operation or while performing an adjustment or repair to protect eyes from foreign objects that may be thrown from the machine.

Operation

- Do not put hands or feet near or under rotating parts. Keep clear of the discharge opening at all times.
- Exercise extreme caution when crossing gravel drives, walks, or roads. Stay alert for hidden hazards or traffic.
- After striking a foreign object, stop the engine, disconnect the wire from the spark plug, thoroughly inspect the snowthrower for any damage, and repair the damage before restarting and operating the snowthrower.
- If the unit should start to vibrate abnormally, stop the engine and check immediately for the cause. Vibration is generally a warning of trouble.
- Stop the engine whenever you leave the operating position, before unclogging the collector/impeller housing or discharge chute, and when making any repairs, adjustments, or inspections.
- When cleaning, repairing or inspecting the snowthrower, stop the engine and make certain the rotor blades and all moving parts have stopped.
- Do not run the engine indoors, except when starting the engine and for transporting the snowthrower in or out of the building. Open the outside doors; exhaust fumes are dangerous.
- Exercise extreme caution when operating on slopes.
- Never operate the snowthrower without proper guards, and other safety protective devices in place and working.
- Never direct the discharge toward people or areas where property damage can occur. Keep children and others away.
- Do not overload the machine capacity by attempting to clear snow at too fast a rate.
- Look behind and use care when backing up with the snowthrower.
- Never operate the snowthrower without good visibility or light. Always be sure of your footing, and keep a firm hold on the handles. Walk; never run.

Clearing a Clogged Discharge Chute

Hand contact with the rotor blades is a common cause of injury associated with snowthrowers. Never use your hand to clean out the discharge chute.

To clear the chute:

- **Shut the engine off!**
- Wait 10 seconds to be sure the rotor blades have stopped rotating.
- Always use a clean-out tool, not your hands.

Maintenance and Storage

- Check all fasteners at frequent intervals for proper tightness to be sure the equipment is in safe working condition.

- Never store the machine with fuel in the fuel tank inside a building where ignition sources are present such as hot water heaters, space heaters, or clothes dryers. Allow the engine to cool before storing in any enclosure.
- Always refer to this operator's manual for important details if the snowthrower is to be stored for an extended period.
- Maintain or replace safety and instruction labels, as necessary.
- Run the machine a few minutes after throwing snow to prevent freeze-up of the rotor blades.

Toro Snowthrower Safety

The following list contains safety information specific to Toro products or other safety information that you must know.

- **Rotating rotor blades can injure fingers or hands.** Stay behind the handles and away from the discharge opening while operating the snowthrower. **Keep your face, hands, feet, and any other part of your body or clothing away from moving or rotating parts.**
- Before adjusting, cleaning, repairing, and inspecting the snowthrower, and before unclogging the discharge chute, **stop the engine, remove the key, and wait for all moving parts to stop.**
- Use a stick, **not your hands**, to remove obstructions from the discharge chute.
- **Before** leaving the operating position, stop the engine, remove the key, and wait for all moving parts to stop.
- Do not wear loose-fitting clothing that could get caught in moving parts.
- If a shield, safety device, or decal is damaged, illegible, or lost, repair or replace it before beginning operation. Also, tighten any loose fasteners.
- **Do not** smoke while handling gasoline.
- **Do not** use the snowthrower on a roof.
- Do not touch the engine while it is running or soon after it has stopped because the engine may be hot enough to cause a burn.
- Perform only those maintenance instructions described in this manual. Before performing any maintenance, service, or adjustment, stop the engine, remove the key, and disconnect the wire from the spark plug. If major repairs are ever needed, contact an Authorized Service Dealer.
- Do not change the governor settings on the engine.
- When storing the snowthrower for more than 30 days, drain the fuel from the fuel tank to prevent a potential hazard. Store fuel in an approved fuel container. Remove the key from the ignition switch before storing the snowthrower.
- Purchase only genuine Toro replacement parts and accessories.

Safety and Instructional Decals

Important: **Safety and instruction decals are located near areas of potential danger. Replace damaged decals.**

Note: Your engine has one of the following decals:

Phase 1 decal

French translation of U.S. EPA decal text:

Ce moteur est conforme à la réglementation antipollution Phase EPA relative aux moteurs ULGE.

Famille : XXXXX.XXXXXX

N° de modèle : XXX-XXXX

CYLINDREE (CC) : 141

Pour plus de détails sur la sécurité, l'entretien et les réglages, reportez-vous au manuel de l'utilisateur. N° de téléphone des services de vente et d'après-vente aux Etats-Unis : 1-800-526-6937

The Toro® Company
Bloomington, MN



INFORMATION IMPORTANTE CONCERNANT LE MOTEUR

Phase 2 decal

French translation of U.S. EPA decal text:

Ce moteur est conforme à la réglementation antipollution Phase II EPA relative aux moteurs ULGE. Pendant une durée de vie moyenne (C).

Famille : XXXXX.XXXXXX

N° de modèle : XXX-XXXX

CYLINDREE (CC) : 141

Pour plus de détails sur la sécurité, l'entretien et les réglages, reportez-vous au manuel de l'utilisateur. N° de téléphone des services de vente et d'après-vente aux Etats-Unis : 1-800-526-6937
Canada: 1-866-854-9033

The Toro® Company
Bloomington, MN



INFORMATION IMPORTANTE CONCERNANT LE MOTEUR

Note: The Phase 2 engine identification decal includes the engine life specification for the emission-related useful life period of the engine. This period relates to the emission compliance life as certified by EPA and/or CARB. The life period specification for your engine is designated as C (125 hours).

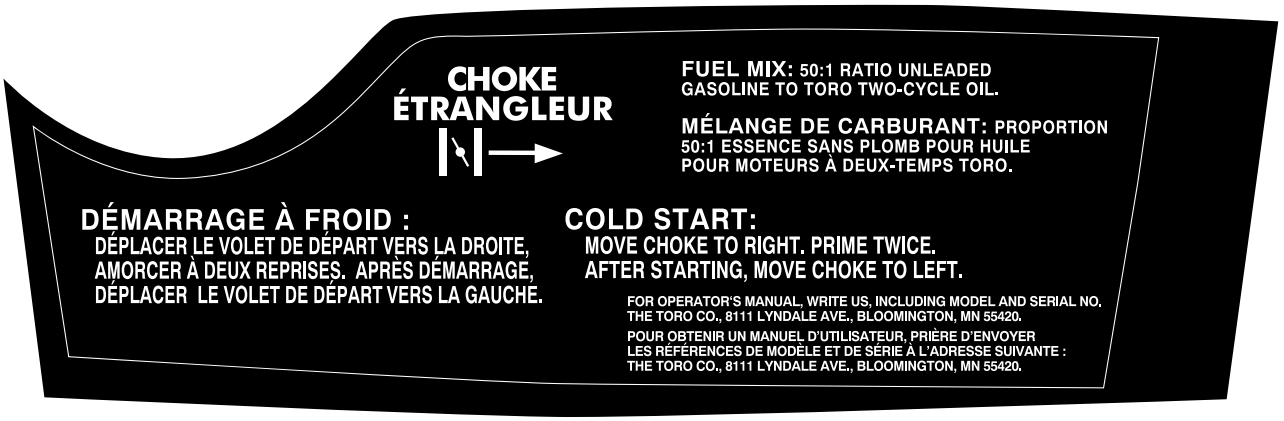

105-1978

Reorder part no. 108-7335

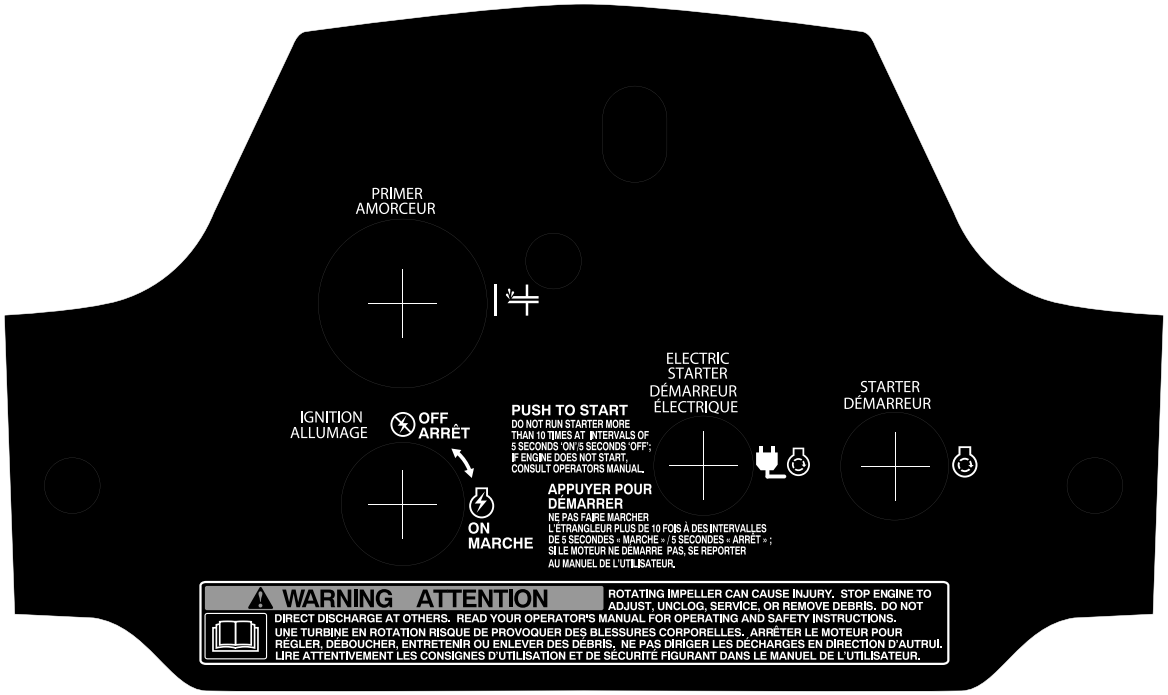

105-1981

Reorder part no. 105-1954

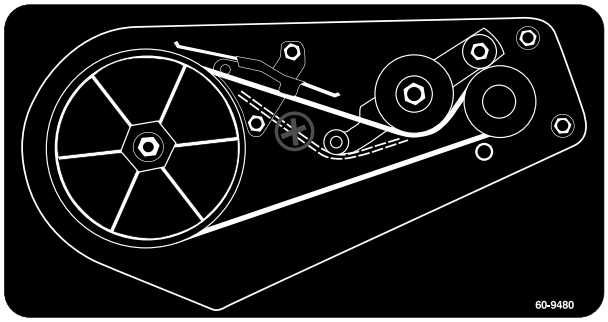

60-9480



104-2767



104-2775



61-4790



104-4135

Setup

Loose Parts

Use the chart below to verify that all parts have been shipped.

Step	Description	Qty.	Use
1.	Handle bolt Curved washer Knob	1 1 1	Install the handle.
2.	Discharge chute Phillips head screws Washers Locknuts	1 3 3 3	Install the discharge chute.
3.	Chute crank and mounting plate Bolts Locknuts	1 2 2	Install the chute crank.

1. Installing the Handle

1. Cut the plastic tie that secures the control cable to the handle.

   Note: Hold the cable taut to ensure that it stays connected at the bottom.

2. Position the upper handle as shown (Figure 3).

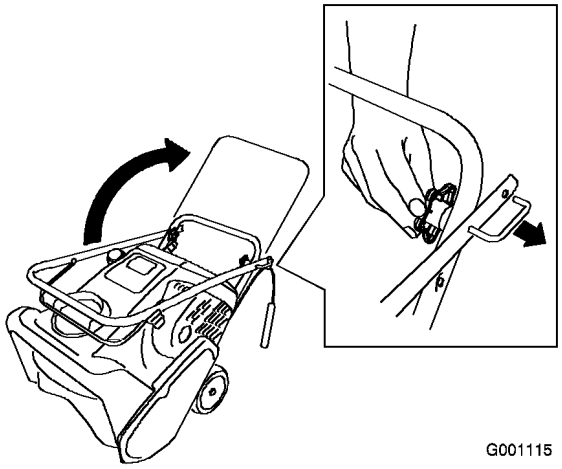

Figure 3

3. Loosely install the handle bolts, curved washers, and knobs (Figure 4).

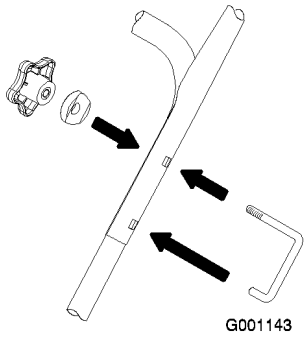

Figure 4

4. Hook the end of the control cable spring into the bottom hole of the control bar (Figure 5).

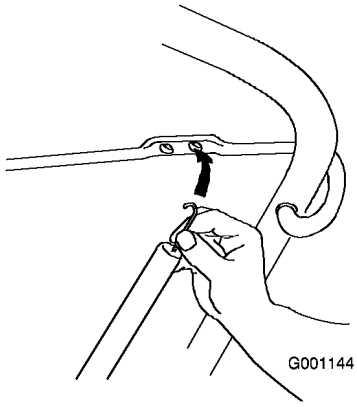

Figure 5

5. Fully insert the handle bolts (Figure 6).

Important: Ensure that you do not pinch the control cable (Figure 6).

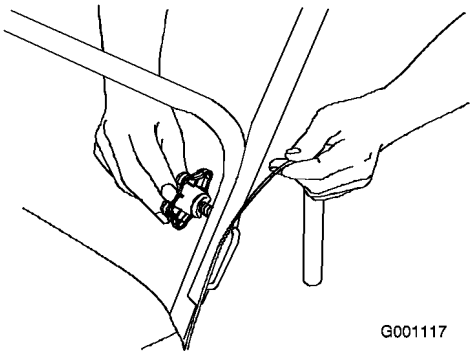

Figure 6

6. Tighten the knobs until they are snug.
7. Adjust the control cable. Refer to Adjusting the Control Cable.

2. Installing the Discharge Chute

Install the discharge chute as shown (Figure 7).

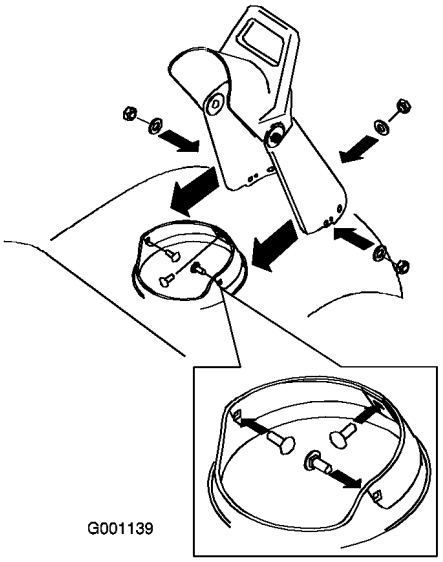

Figure 7

3. Installing the Chute Crank

1. Insert the end of the chute crank through the hole in the shroud and align the mounting bracket with the holes in the lower handle (Figure 8).

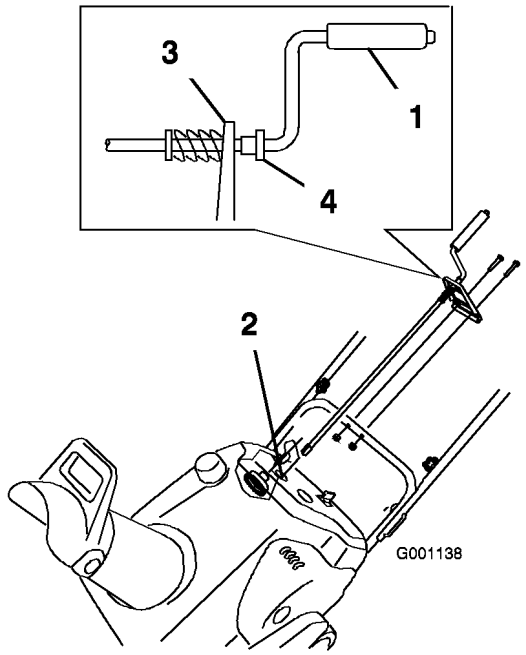

Figure 8

1. Chute crank
2. Hole in the shroud
3. Mounting bracket
4. Plastic bushing

2. Slowly rotate the crank until the end of the chute crank fits into the hidden gear opening and the discharge chute turns the crank.

   Note: Ensure that the plastic bushing is fully inserted into the hole in the mounting bracket (Figure 8).

3. Secure the mounting bracket to the handle with 2 bolts and 2 locknuts.

Product Overview

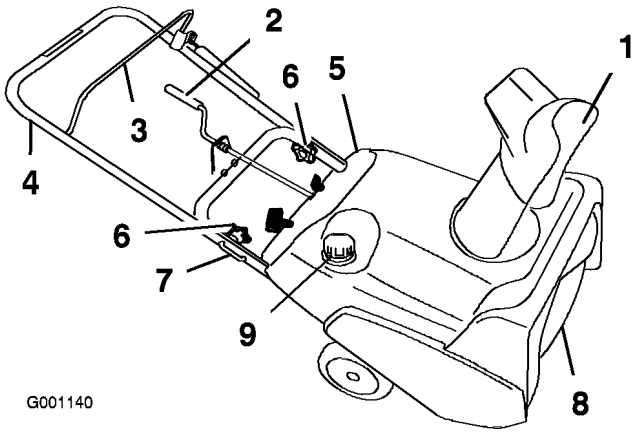

Figure 9

1. Discharge chute
2. Chute crank
3. Control bar
4. Handle
5. Control panel
6. Knob
7. Handle bolt (2)
8. Rotor blades
9. Fuel tank cap

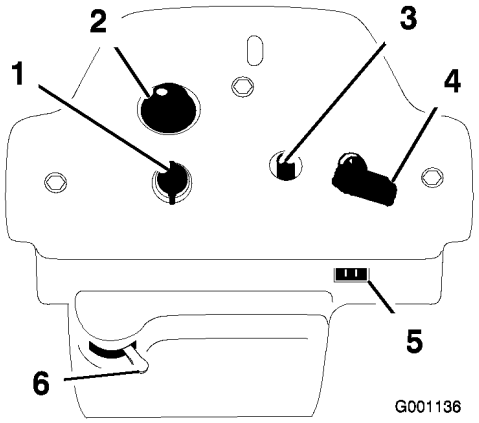

Figure 10

1. Key switch
2. Primer
3. Electric-start button
4. Recoil start
5. Cord connection
6. Choke lever

Operation

Note: Determine the left and right sides of the machine from the normal operating position.

Gasoline is extremely flammable and explosive. A fire or explosion from gasoline can burn you and others.

- **To prevent a static charge from igniting the gasoline, place the container and/or snowthrower on the ground before filling, not in a vehicle or on an object.**
- **Fill the tank outdoors when the engine is cold. Wipe up spills.**
- **Do not handle gasoline when smoking or around an open flame or sparks.**
- **Store gasoline in an approved fuel container, out of the reach of children.**

Mixing the Gasoline and Oil

This snowthrower uses a 50:1 gasoline-to-oil mixture. Use **Toro 50:1 2-Cycle Oil (Fuel Stabilizer Added)** or an equivalent high-grade, NMMA TCW-certified two-cycle oil.

Important: To prevent engine damage, do not use automotive oil (such as SAE 30 or 10W30) or fuel mixed at the wrong gasoline-to-oil ratio.

1. Pour a half US gallon (1.9 liters) of fresh, unleaded gasoline into an approved fuel container.
2. Add two-cycle oil to the gasoline according to the chart below (Figure 11):

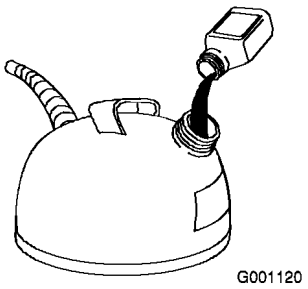

Figure 11

50:1 Gasoline-to-Oil Ratio Mixing Chart	
Gasoline	Oil
1 US gallon (3.8 liters)	2.6 ounces (80 ml)
2 US gallons (7.6 liters)	5.2 ounces (160 ml)

3. Install the cap on the fuel container.
4. Shake the container to mix the gasoline and oil thoroughly.
5. Slowly remove the cap and add the remaining amount of gasoline.

   Note: Do not mix gasoline and oil in the fuel tank. Oil at room temperature mixes easier and more thoroughly than cold oil. Oil below 32°F (0°C) requires additional mixing

Filling the Fuel Tank

Fill the fuel tank with a fresh mixture of gasoline and oil mixed at the proper ratio (Figure 12).

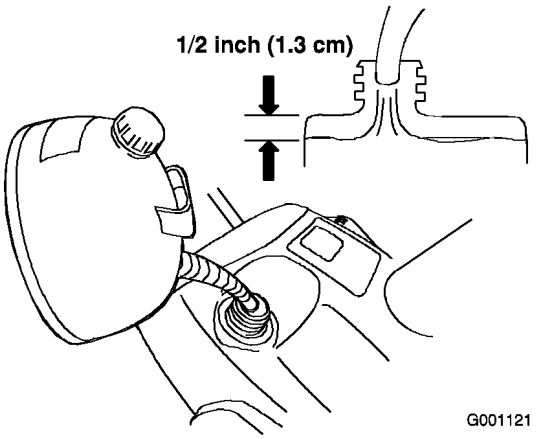

Figure 12

Starting the Engine

1. Turn the ignition key clockwise to the On position (Figure 13).

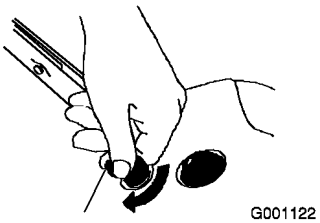

Figure 13

2. Move the choke lever to the right (Figure 14).

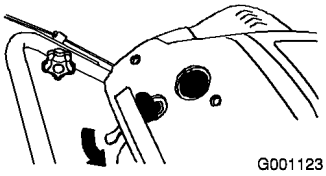

Figure 14

3. Firmly push in the primer 2 times with your thumb, holding the primer in for a second before releasing it each time (Figure 15).

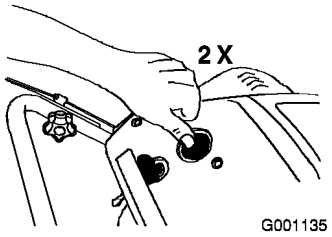

Figure 15

4. Start the engine using either the electric-start button (Figure 16) or the recoil starter (Figure 17).

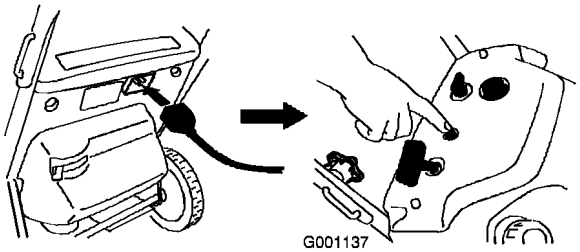

Figure 16

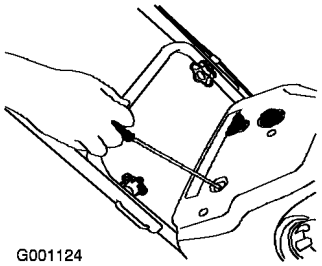

Figure 17

Important: Run the electric starter no more than 10 times at intervals of 5 seconds on, then 5 seconds off. Running the electric starter extensively can overheat and damage it. If the engine does not start after this series of attempts, wait at least 40 minutes to allow the starter to cool before attempting to start it again. If the engine does not start after the second series of attempts, take the snowthrower to an Authorized Service Dealer for service.

5. With the engine running, move the choke lever to the left slowly.

If you leave the snowthrower plugged into a power outlet, someone can inadvertently start the snowthrower and injure people or damage property.

Unplug the power cord whenever you are not starting the snowthrower.

Stopping the Engine

To stop the engine, turn the ignition key counterclockwise to the Off position (Figure 18).

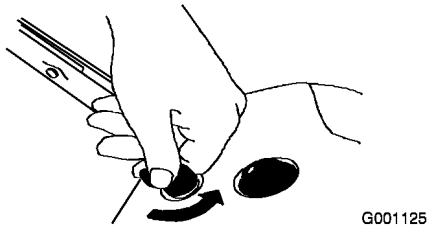

Figure 18

Starting the Rotor Blades

To start the rotor blades, hold the control bar against the handle (Figure 19).

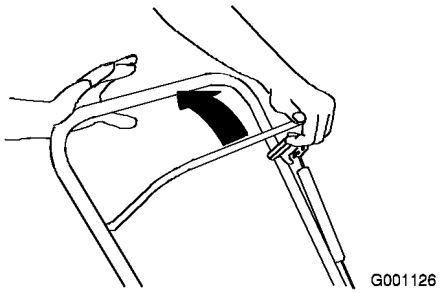

Figure 19

Stopping the Rotor Blades

To stop the rotor blades, release the control bar (Figure 20).

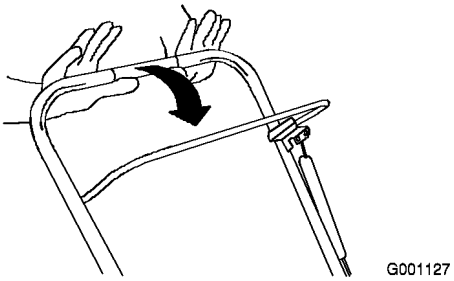

Figure 20

Adjusting the Discharge Chute

To adjust the discharge chute, rotate the chute crank and move the chute deflector handle as shown (Figure 21).

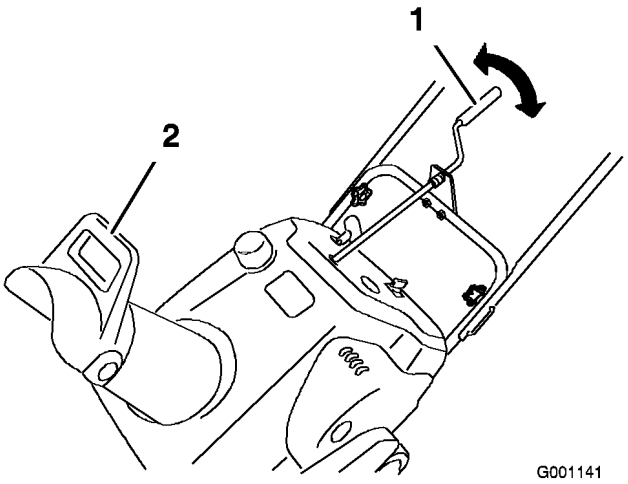

Figure 21

1. Chute handle
2. Chute deflector handle

Preventing Freeze-up after Use

- Let the engine run for a few minutes to prevent moving parts from freezing. Stop the engine, wait for all moving parts to stop, and remove ice and snow from the snowthrower.
- With the engine off, pull the recoil starter handle several times and push the electric start button once (if applicable) to prevent the recoil and electric starters from freezing up.

Operating Tips

The rotor blades can throw stones, toys, and other foreign objects and cause serious personal injury to the operator or to bystanders.

- **Keep the area to be cleared free of all objects that the rotor blades could pick up and throw.**
- **Keep all children and pets away from the area of operation.**

- Remove the snow as soon as possible after it falls.
- To self-propel, raise the handle and tilt the snowthrower slightly forward, lifting the wheels off the ground. The more you tilt the handle forward, the faster the snowthrower self-propels.
- If the snowthrower does not propel itself forward on slippery surfaces or in heavy snow, push forward on the handle, but allow the snowthrower to work at its own pace.
- Overlap each swath to ensure complete snow removal.
- Discharge the snow downwind whenever possible.
- In snowy and cold conditions, some controls and moving parts may freeze. Do not use excessive force when trying to operate frozen controls. If you have difficulty operating any control or part, start the engine and let it run for a few minutes.

Maintenance

Note: Determine the left and right sides of the machine from the normal operating position.

Recommended Maintenance Schedule(s)

Maintenance Service Interval	Maintenance Procedure
After the first operating hour	• Check the control cable both initially and after the first hour of operation; adjust it if necessary. • Check for loose fasteners and tighten them if necessary.
Yearly	• Check the control cable and adjust it if necessary. • Check for loose fasteners and tighten them if necessary. • Have an Authorized Service Dealer inspect the spark plug and replace it if necessary. • Inspect the rotor blades and have an Authorized Service Dealer replace the rotor blades and scraper if necessary. • Have an Authorized Service Dealer inspect the drive belt and replace it if necessary.
Yearly or before storage	• Prepare the snowthrower for storage.

Adjusting the Control Cable

Checking the Cable

Important: Check the control cable for proper adjustment initially, after the first operating hour, and then annually thereafter.

1. Move the control bar back toward the handle to remove the slack in the cable.
2. Ensure that a 1/16 to 1/8 inch (2 to 3 mm) gap exists between the control bar and the handle (Figure 22).

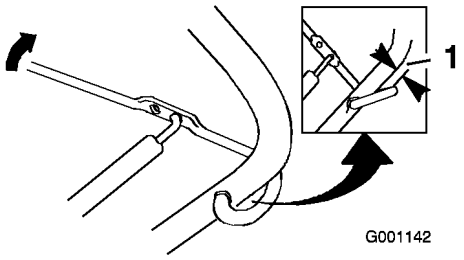

Figure 22

1. 1/16 to 1/8 inch (2 to 3 mm) gap

Note: To adjust the cable, refer to Adjusting the Cable below.

Important: The control cable must contain some slack when you disengage the control bar for the rotor blades to stop properly.

Adjusting the Cable

1. Unhook the end of the control cable spring from the control bar (Figure 23).

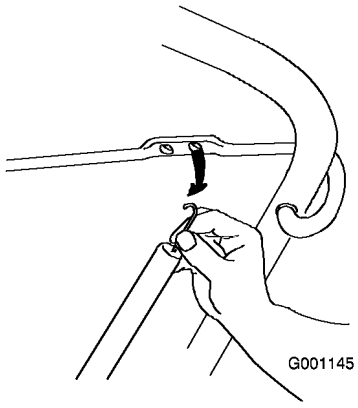

Figure 23

2. Move the Z-fitting to a higher or lower hole in the adjuster link as needed to obtain the 1/16 to 1/8 inch (2 to 3 mm) gap between the control bar and the handle (Figure 24).

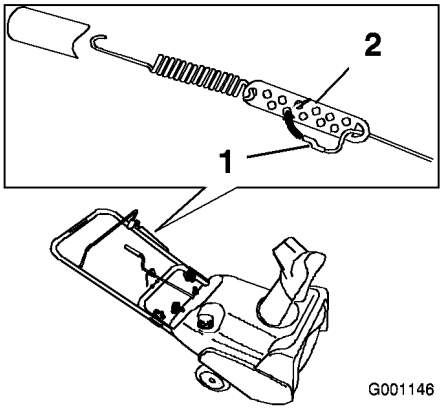

Figure 24

1. Z-fitting
2. Adjuster link

Note: Moving the Z-fitting higher decreases the gap between the control bar and the handle; moving it lower increases the gap.

3. Replace the spring cover and hook the end of the control cable spring into the bottom hole of the control bar.
4. Check the adjustment; refer to Checking the Cable.

Note: After extended use, the drive belt may wear and lose its proper belt tension. If the drive belt slips (continuously squeals) under a heavy load, increase the belt tension by inserting the spring end into the top hole of the control bar. The belt may slip (squeal) in wet conditions; to dry out the drive system, start the rotor and run it without a load for 30 seconds.

Inspecting the Rotor Blades

Before each season, inspect the rotor blades for wear. When a rotor blade edge has worn down to the wear indicator hole, have an Authorized Service Dealer replace the rotor blades and the scraper (Figure 25)

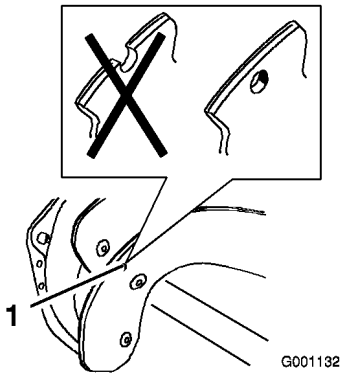

Figure 25

1. Wear indicator hole

Storage

Storing the Snowthrower

- **Gasoline fumes are highly flammable, explosive, and dangerous if inhaled. If you store the product in an area with an open flame, the gasoline fumes may ignite and cause an explosion.**
- **Do not store the snowthrower in a house (living area), basement, or any other area where ignition sources may be present, such as hot water and space heaters, clothes dryers, furnaces, and other like appliances.**

Important: Do not use the chute handle to lift the snowthrower. This can damage the chute handle.

1. Add a fuel stabilizer/conditioner to the fuel in the fuel tank as directed.

   Note: If you use Toro 50:1 2-Cycle Oil (Fuel Stabilizer Added), you do not need to add a fuel stabilizer/conditioner.

2. Run the engine for 5 minutes to distribute the conditioned fuel through the fuel system.
3. Stop the engine and allow it to cool.
4. Use a hand pump to pump the fuel from the fuel tank into an approved fuel container, or run the engine until it stops.
5. Start the engine and run it until it stops.
6. Choke or prime the engine, start it a third time, and run the engine until it will not start.
7. Slowly pull the recoil starter until you feel resistance due to compression pressure, then stop.
8. Release the starter tension gradually by allowing the rope to go back slowly to prevent the engine from reversing due to compression pressure.
9. Dispose of unused fuel properly. Recycle it according to local codes, or use it in your automobile.

   Note: Do not store stabilized fuel for more than 90 days.

10. Tighten all loose screws, bolts, and locknuts. Repair or replace any damaged parts.
11. Clean the snowthrower thoroughly.
12. Cover the snowthrower and store it in a clean, dry place out of the reach of children. Allow the engine to cool before storing it in any enclosure.

Folding the Handle

1. Loosen the knobs and pull out the handle bolts.
2. Fold the upper handle forward (Figure 26).

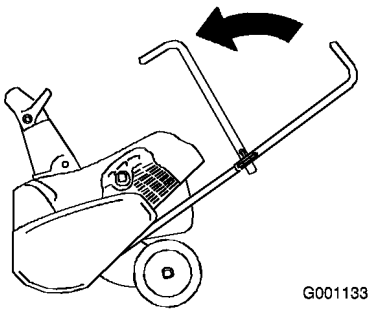

Figure 26

Federal Emission Control Warranty Statement

A Two-Year Limited Warranty

Your Warranty Rights and Obligations

The U.S. Environmental Protection Agency (EPA), Toro, and Toro Warranty Company are pleased to explain the emission control system warranty on your 1997 and later utility/lawn/garden equipment engine. 1997 and later model year utility/lawn/garden equipment engines must be designed, built and equipped, at the time of sale, to meet the U.S. EPA regulations for small non-road engines. The equipment engine must be free from defects in materials and workmanship, which cause it to fail to conform with U.S. EPA standards, for the first two years of engine use from the date of sale to the ultimate purchaser. Toro and Toro Warranty Company warrant the emission control system on your utility/lawn/garden equipment engine for the period of time listed above, provided there has been no abuse, neglect, or improper maintenance of your utility/lawn/garden equipment engine.

Your emission control system may include parts such as the carburetor or fuel injection system, the ignition system, and catalytic converter. Also included may be hoses, belts, connectors, and other emission related assemblies.

Where a warrantable condition exists, Toro and Toro Warranty Company promise to repair your engine at no cost to you, including diagnosis, parts, and labor.

Manufacturer's Warranty Coverage

Toro and its affiliate, Toro Warranty Company, pursuant to an agreement between them, jointly warrant the 1997 and later utility/lawn/garden equipment engines for two years from the date of delivery. If any emission-related part on your engine is defective in materials or workmanship, we will repair or replace the part, free of charge.

Owner Responsibilities

As the engine owner, you are responsible for the performance of the required maintenance listed in your operator's manual. We recommend that you retain all receipts covering maintenance on your equipment, but we cannot deny warranty solely for the lack of receipts or for your failure to ensure the performance of all scheduled maintenance.

Any replacement part or service that is equivalent in performance and durability may be used in non-warranty maintenance or repairs, and shall not reduce our warranty obligation.

As the engine owner, you should be aware that we may deny you warranty coverage if your engine or a part has failed due to abuse, neglect, improper maintenance, or unapproved modifications or parts.

You are responsible for presenting your equipment engine to an Authorized Service Dealer as soon as a problem exists. The warranty repairs should be completed in a reasonable amount of time, not to exceed thirty (30) days.

If you have any questions regarding your warranty rights and responsibilities, contact us at:

Customer Care Department, Consumer Division

Toro Warranty Company

8111 Lyndale Avenue South

Bloomington, MN 55420-1196

800-348-2424 (U.S. customers)

877-484-9255 (Canada customers)

Warranted Parts

The warranty period begins on the date the engine or equipment is delivered to a retail purchaser. Toro and Toro Warranty Company jointly warrant to the initial owner and each subsequent purchaser that the engine is free from defects in materials and workmanship, which cause the engine to fail to conform with applicable regulations, for a period of two years.

Failures caused by abuse, neglect, or improper maintenance are not covered. The use of add-on or modified parts can be grounds for disallowing a warranty claim. We are not liable to cover failures of warranted parts caused by the use of add-on or modified parts. We are liable for damages to other engine components caused by the failure of a warranted part still under warranty. The owner is responsible for the performance of the required maintenance, as defined in the operator's manual.

Any warranted part which is not scheduled for replacement as required maintenance, or which is scheduled only for regular inspection to the effect of "repair or replace as necessary" shall be warranted for the warranty period. Any warranted part which is scheduled for replacement as required maintenance shall be warranted for the period of time up to the first scheduled replacement point for that part. Coverage under this warranty extends only to the parts listed below (the emissions system parts) to the extent that these parts were present on the engine when purchased.

- Fuel Metering System
  - Cold start enrichment system including the choke mechanism or priming system
  - Fuel pump
  - Air fuel ratio feedback system
  - Carburetor and internal parts
  - Fuel injection system
- Air Induction System
  - Air cleaner
  - Reed intake system
  - Intake manifold
  - Controlled hot air intake system
- Ignition System
  - Spark plug(s)
  - Ignition coils and electronics
  - Advance/retard mechanisms
- Catalytic Converter/Thermal Reactor System
  - Catalytic Converter
  - Thermal reactor
  - Exhaust manifold
- Air Injection System
  - Air injection system or pulse valve
  - Valves affecting distribution of air
- Exhaust Gas Recirculation (EGR) System
  - EGR valve body and piping system connecting to the intake side of the engine
  - EGR control system
- Particulate Controls (Traps, filters, precipitators, and any other device used to capture particulate emissions)
- Miscellaneous Items Used in the Above Systems
  - Vacuum, temperature, and time-sensitive valves and switches
  - Electronic controls
  - Hoses, connectors, and assemblies of same

Instructions for Obtaining Warranty Service

If you think that your Toro Product contains a defect in materials or workmanship, follow this procedure:

1. Contact any Toro Authorized or Master Service Dealer to arrange service at their dealership. To locate a dealer convenient to you, refer to the Yellow Pages of your telephone directory (look under "Lawn Mowers") or access our website at www.Toro.com. U.S. Customers may also call 800-421-9684 to use our 24-hour Toro dealer locator system.
2. Bring the product and your proof of purchase (sales receipt) to the Service Dealer.

   The owner shall not be charged for diagnostic labor which leads to the determination that a warranted part is defective, if the diagnostic work is performed at a warranty station.

General Conditions

Neither The Toro Company nor Toro Warranty Company is liable for indirect, incidental or consequential damages in connection with the use of the Toro Products covered by this warranty, except for damages to other engine components caused by the failure of a warranted part still under warranty.

All implied warranties of merchantability (that the product is fit for ordinary use) and fitness for use (that the product is fit for a particular purpose) are limited to the duration of the express warranty.

Some states do not allow exclusions of incidental or consequential damages, or limitations on how long an implied warranty lasts, so the above exclusions and limitations may not apply to you.

This warranty gives you specific legal rights, and you may also have other rights which vary from state to state.

Snow Commander
and
Power Curve
Single-stage
Snow Products

The Toro 5-Year GTS Starting Guarantee and The Toro 2-Year Total Coverage Guarantee

A Full Warranty (Limited Warranty for Commercial Use)

Conditions and Products Covered under The Toro Starting Guarantee

The Toro Company and its affiliate, Toro Warranty Company, guarantee that your **Toro GTS (Guaranteed to Start)** engine, when used for residential purposes*, will start on the first or second pull for **five (5) years** from the date of purchase, if you provide the routine maintenance it requires, or we will fix it free of charge.

This warranty covers the cost of parts and labor, but you must pay transportation costs. This warranty applies to all **Snow Commander® and Power Curve® single-stage** Toro Snowthrowers. (Not Powerlite® models.)

Conditions and Products Covered under The Toro Total Coverage Guarantee

The Toro Company and its affiliate, Toro Warranty Company, promise to repair any Toro Product used for residential purposes* if defective in materials or workmanship or if it stops functioning due to the failure of a component for a period of **two (2) years** from the date of purchase.

This warranty covers the cost of parts and labor, but you must pay transportation costs. This warranty applies to all **Snow Commander® and Power Curve® single-stage** Toro Snowthrowers. (Not Powerlite® models.)

Limited Warranty for Commercial Use

Gas-powered Toro Snowthrowers used for commercial, institutional, or rental use are warranted for 45 days against defects in materials or workmanship. Components failing due to normal wear are not covered by this warranty. The Toro Starting Guarantee does not apply when the product is used commercially.

Items and Conditions Not Covered

There is no other express warranty. This express warranty does not cover the following:

- Cost of regular maintenance service or parts, such as filters, fuel, lubricants, oil changes, spark plugs, cable/linkage adjustments, or brake and clutch adjustments
- Any product or part which has been altered or misused or required replacement or repair due to accidents or lack of proper maintenance
- Repairs necessary due to electrical supply irregularities or failure to properly prepare the snowthrower prior to any period of non-use over three months
- Pickup and delivery charges
- Operational misuse, neglect, or accidents
- Repairs or attempted repairs by anyone other than a Toro Service outlet
- Repairs or adjustments to correct starting difficulties due to the following:
  - failure to follow proper maintenance procedures
  - snowthrower auger/paddles striking an object
  - contaminants in the fuel system
  - improper fuel or fuel/oil mixture (consult your *Operator's Manual* if in doubt)
  - failure to drain the fuel system prior to any period of non-use over three months
- Special operational conditions where starting may require more than two pulls:
  - first time starts after extended period of non-use over three months or seasonal storage
  - improper starting procedures

If you are having difficulty starting your unit, please check the *Operator's Manual* to ensure that you are using the correct starting procedures. This can save an unnecessary visit to a Service Dealer.

Owner Responsibilities

You must maintain your Toro Product by following the maintenance procedures described in the *Operator's Manual*. Such routine maintenance, whether performed by a dealer or by you, is at your expense.

Instructions for Obtaining Warranty Service

If you think that your Toro Product contains a defect in materials or workmanship, or if a normal, able-bodied adult can no longer start your product's engine in one or two pulls, follow this procedure:

1. Contact any Toro Authorized or Master Service Dealer to arrange service at their dealership. To locate a dealer convenient to you, refer to the Yellow Pages of your telephone directory (look under *Lawn Mowers*) or access our website at www.Toro.com. You may also call our Toro Customer Care Department toll free at 866-336-5205 (U.S. customers) or 866-854-9033 (Canadian customers).
2. Bring the product and your proof of purchase (sales receipt) to the Service Dealer.
3. If for any reason you are dissatisfied with the Service Dealer's analysis or with the assistance provided, contact us at: Customer Care Department, Consumer Division, Toro Warranty Company, 8111 Lyndale Avenue South, Bloomington, MN 55420-1196.

General Conditions

All repairs covered by these warranties must be performed by an Authorized or Master Toro Service Dealer using Toro approved replacement parts. Repair by a Toro Service Dealer is your sole remedy under these warranties.

Neither The Toro Company nor Toro Warranty Company is liable for indirect, incidental, or consequential damages in connection with the use of the Toro Products covered by these warranties, including any cost or expense of providing substitute equipment or service during reasonable periods of malfunction or non-use pending completion of repairs under these warranties.

Some states do not allow exclusions of incidental or consequential damages, or limitations on how long an implied warranty lasts, so the above exclusions and limitations may not apply to you. This warranty gives you specific legal rights, and you may also have other rights which vary from state to state.

Countries Other than the United States or Canada

Customers who have purchased Toro products exported from the United States or Canada should contact their Toro Distributor (Dealer) to obtain guarantee policies for your country, province, or state. If for any reason you are dissatisfied with your Distributor's service or have difficulty obtaining guarantee information, contact the Toro importer. If all other remedies fail, you may contact us at Toro Warranty Company.

* Residential purposes means use of the product on the same lot as your home. Use at more than one location is considered commercial use, and the commercial use warranty would apply.