Form Number 3354-874 Rev A

22in Recycler® Lawnmower

Model No. 20013 - 260000001 and up.

Parts Catalog

Ordering Replacement Parts

To order replacement parts, please supply the part number, the quantity, and the description of each part desired.

Understanding Reference Numbers

Each Identified part in an illustration has a reference number. The reference number for a part also appears in the parts list, along with other information about the part.

This catalog uses two special reference number formats, one to indicate parts in a service assembly and another to indicate the quantity of a given part in an illustration.

Service Assembly Reference Numbers

Parts in service assemblies have reference numbers in the form a:b. The a represents the reference number of the entire service assembly and the b represents a sequential number unique to each part within the service assembly.

For example, a wheel assembly might be identified by reference number 6, the tire by 6:1, the valve by 6:2, and the wheel by 6:3. When you order the assembly identified by reference number 6, you receive all parts identified by reference numbers 6:1, 6:2, and 6:3. However, you may also order any part individually. Reference numbers of this type appear in illustrations and in part lists.

Reference Numbers Indicating Quantity

In an illustration, if a reference number indicates more than one part, the reference number has the form nX y. The n represents the quantity of the part, the X is the multiplication symbol, and the y represents the reference number.

For example, in an illustration, the reference number 2X 37 means that two of the parts identified by reference number 37 are indicated.

© The Toro Company - 2005
All Rights Reserved

Register your product at www.Toro.com

Contents

Description	Page
Deck, Side Chute and Rear Door Assembly	3
Front Axle and Wheel Assembly	4
Rear Axle and Transmission Assembly	5
Transmission Assembly No. 106-3956	6
Engine and Blade Assembly	7
Handle Assembly	8
Rear Bag Assembly	9
Engine Assembly Tecumseh Lv195ea-362003b	10
Engine Assembly Tecumseh Lv195ea-362003b (continued)	12
Carburetor Assembly No. 640303 Tecumseh Model No. Lv195ea-362003b	14
Recoil Starter Assembly No. 590739 Tecumseh No. Lv195ea-362003b	15
Recoil Starter Assembly No. 590702 (Optional) Tecumseh Lv195ea-362003b	16

Part Description Abbreviations

Part descriptions in this catalog may include the following abbreviations.

AR	as required
ASM	assembly
BBC	blade brake clutch
CARR	carriage
DEG	degrees
EXT	external
FH	flat head
GA	gauge
HF	hex flange
HH	hex head
HHF	hex head flange
HHFTF	hex head flange thread forming
HJ	hex jam
HLH	hex lag head
HOC	height-of-cut
HSBH	hex socket button head
HSFH	hex socket flat head
HSH	hex socket head
HWH	hex washer head
HWHTF	hex washer head thread forming
HYD	hydraulic
INC	incorporated
LH	left hand
NI	nylon insert
NPTF	national pipe thread fine
PFH	phillips flat head
PPH	phillips pan head
PPHTF	phillips pan head thread forming
PRH	phillips round head
PTH	phillips truss head
PTO	power-take-off
RH	right hand
ROPS	roll-over-protection-system
SFH	slotted fillister head
SHH	slotted hex head
SHWH	slotted hex washer head
SPH	slotted pan head
SQH	square head
SRH	slotted round head
STD	standard
TAP	self tapping
TTH	torx truss head

Footnotes

❶ Not illustrated

❷ Not serviced separately

❸ Obtain from your local Tecumseh dealer

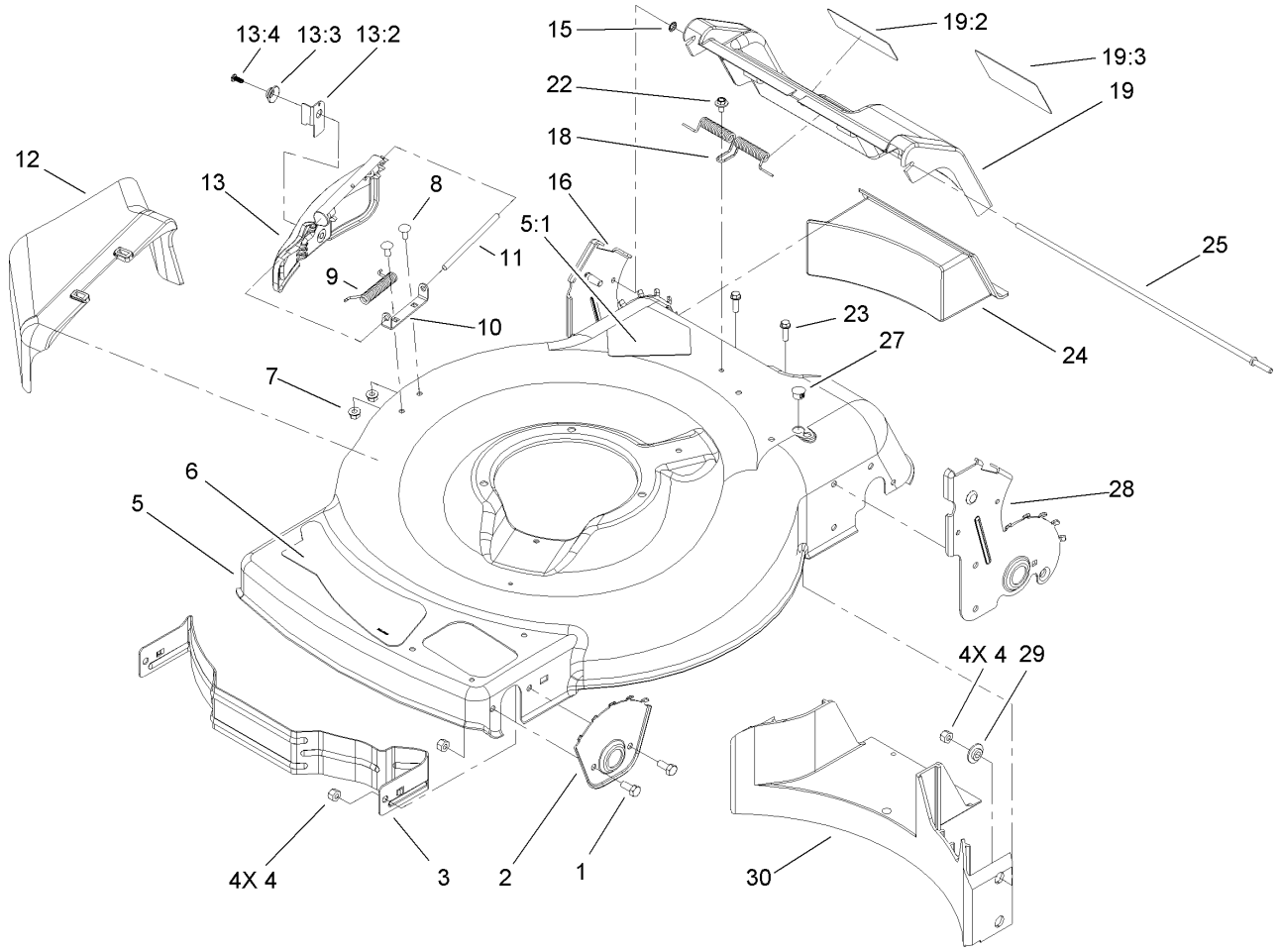

Deck, Side Chute and Rear Door Assembly

Ref	Part No.	Qty.	Description
1	322-3	4	Screw-HH
2	105-1808-03	2	Plate-HOC, Front
3	104-8694-03	1	Baffle-Front
4	3296-29	8	Nut-Lock, NI
5	104-7916	1	Housing
5:1	94-8072	1	Decal-Danger
6	105-1297	1	Decal-Deck
7	32128-32	2	Nut-HHF
8	3229-11	2	Screw-CARR
9	99-5293	1	Spring-Torsion
10	99-5292	1	Bracket-Cover
11	99-5291	1	Rod-Cover
12	105-3028	1	Chute-Discharge, Side
13	106-8376	1	Discharge Door ASM
13:2	107-0795	1	Latch-Door
13:3	107-7456	1	Cap-Door
13:4	107-7461	1	Screw-Plastite
15	32112-6	1	Nut-Push
16	107-0790	1	RH Rear HOC Plate ASM
18	105-3032	1	Spring-Door, Rear
19	105-1324	1	Rear Door ASM
19:2	104-7909	1	Decal-Warning
19:3	104-7908	1	Decal-Warning
22	46-6810	1	Screw And Washer ASM

Ref	Part No.	Qty.	Description
23	46-8091	2	Screw-HWH
24	105-1842	1	Plug-Discharge, Rear
25	105-1827	1	Rod-Pivot, Rear Door
27	104-9369	1	Plug-Dome
28	107-0783	1	LH Rear HOC Plate ASM
29	105-3006	4	Washer-Stepped
30	105-1834	1	Baffle-Rear

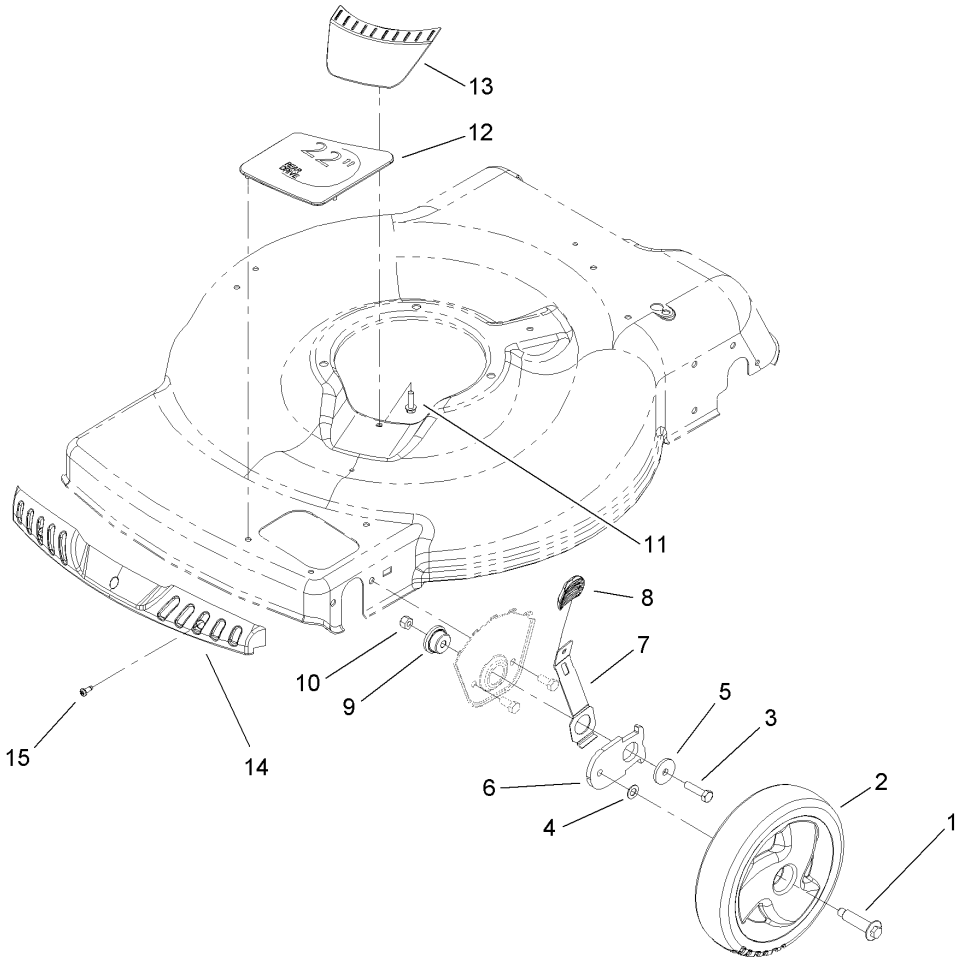

Front Axle and Wheel Assembly

Ref	Part No.	Qty.	Description
1	614650	2	Bolt-Shoulder
2	105-1814	2	Wheel ASM
3	322-6	2	Screw-HH
4	40-1940	2	Washer
5	105-3048	2	Washer-Flat
6	105-1807	2	Arm-Pivot, Front
7	105-1809	2	Arm-Spring
8	105-3042	2	Knob-Lever, HOC
9	105-1818	2	Bushing-Mount, HOC
10	3296-29	2	Nut-Lock, NI
11	46-8091	1	Screw-HWH
12	105-3004	1	Cover-Cutout
13	105-3005	1	Cover-Belt Opening
14	104-9359	1	Bumper-Mower
15	105-6849	3	Screw-Thread Forming

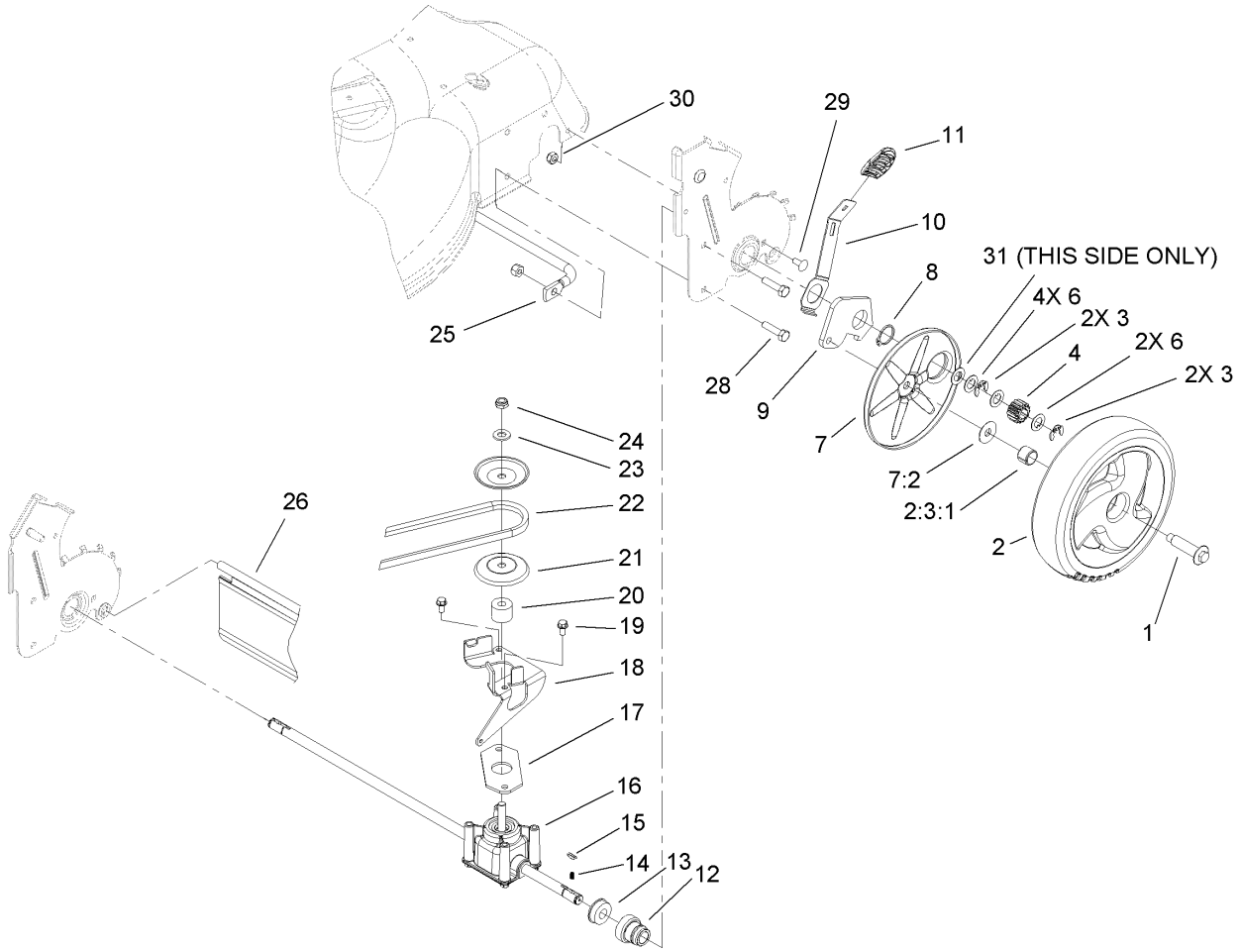

Rear Axle and Transmission Assembly

Ref	Part No.	Qty.	Description
1	614650	2	Bolt-Shoulder
2	105-3036	2	Wheel Gear ASM
❶❷2:3		1	Wheel ASM
2:3:1	27-6250	2	Bushing
3	65-2720	4	Klipring-Locking
4	105-3040	2	Gear-Pinion, 15T
6	105-6840	6	Washer-Thrust
7	108-3794	2	Cover-Wheel
❶❷7:1		1	Cover
7:2	614426	1	Washer-Stepped
8	32151-36	2	Ring-Retaining
9	105-1819	2	Arm-Pivot, Rear
10	105-1809	2	Arm-Spring
11	105-3042	2	Knob-Lever, HOC
12	104-8698	2	Retainer-Bearing, HOC
13	104-8699	2	Bearing-Ball
14	39-9650	2	Spring-Compression
15	612066	2	Key
16	106-3956	1	Transmission ASM
17	108-9756	1	Gasket-Gearbox
18	106-6809-03	1	Bracket-Pivot
19	32144-4	2	Screw-HWH
20	92-5791	1	Spacer
21	100-1176	2	Pulley-Half

Ref	Part No.	Qty.	Description
22	91-2258	1	V-Belt
23	3256-24	1	Washer-Flat
24	3296-5	1	Nut-Lock
25	105-1811	1	Brace-Plate, HOC
26	105-1843	1	Shield-Trailing
28	322-6	4	Screw-HH
29	3229-11	2	Screw-CARR
30	3296-16	2	Nut-Lock, NI
31	36-4780	1	Washer

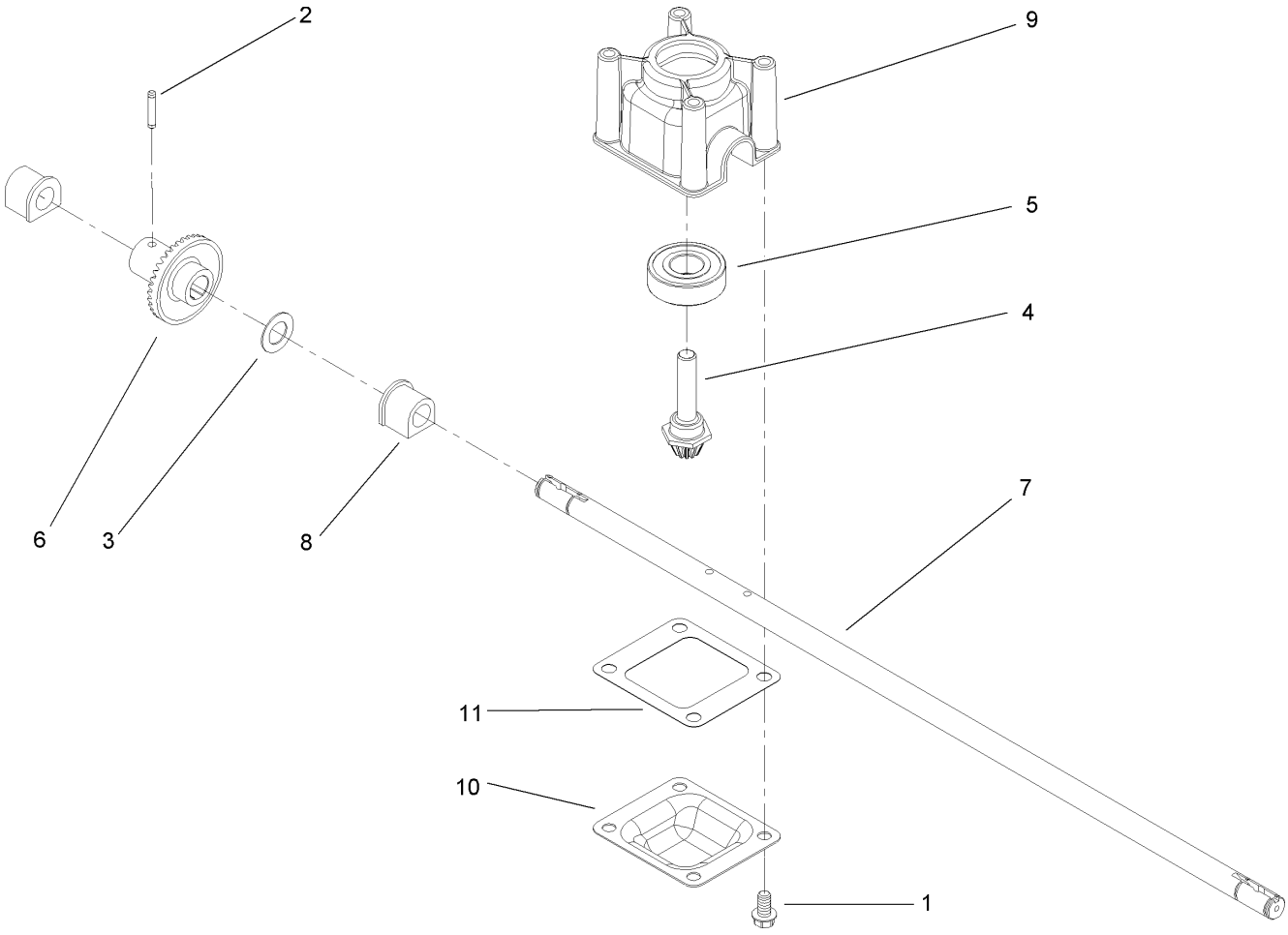

Transmission Assembly No. 106-3956

Ref	Part No.	Qty.	Description
1	32144-4	4	Screw-HWH
2	3285-19	1	Pin-Groove
3	36-4780	1	Washer
4	92-5790	1	Pinion
5	100-1048	1	Bearing-Ball
6	104-8671	1	Gear-Bevel, 37T
7	106-3957	1	Shaft-Output
8	104-8673	2	Bushing-Shaft, Output
9	104-8674	1	Gearcase-Upper
10	104-8675-03	1	Cover-Gearcase
11	105-6839	1	Gasket-Gearcase

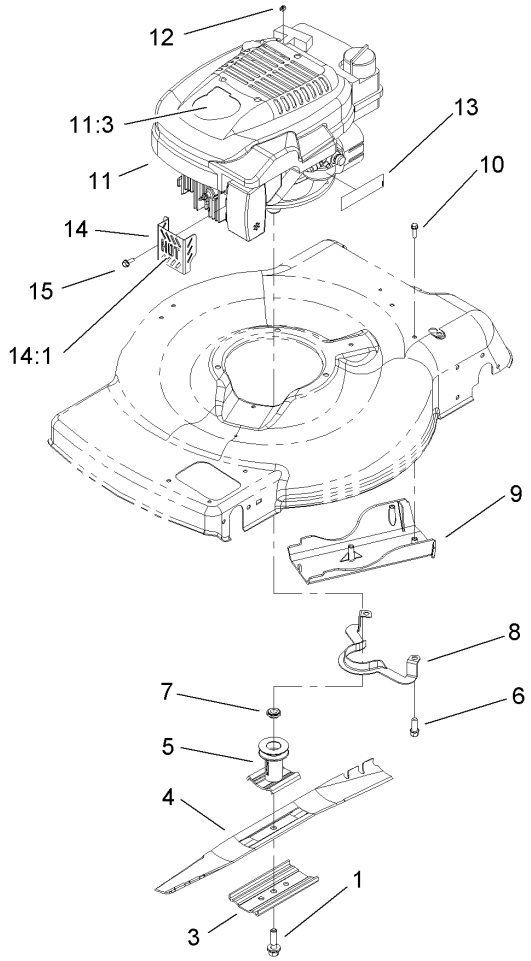

Engine and Blade Assembly

Ref	Part No.	Qty.	Description
1	105-8579	1	Bolt-Blade
3	108-3766-03	1	Support-Blade
4	104-8697-03	1	Blade-22 Inch
5	106-3987	1	Blade Driver ASM
6	95-1726	3	Screw-Taptite
7	106-3999	1	Spacer-Driver
8	105-3030-03	1	Guide-Belt
9	105-1835	1	Cover-Belt, Rear
10	46-8091	3	Screw-HWH
❷❸11		1	Engine-Tecumseh, Lev195Ea-362003B
11:3	108-8109	1	Decal-Shroud
12	92-1701	1	Stop-Rope
13	105-6832	1	Decal-Primer
14	106-8387	1	Muffler Guard ASM
14:1	106-5517	1	Decal-Surface, Hot
15	32144-85	1	Screw-HWH

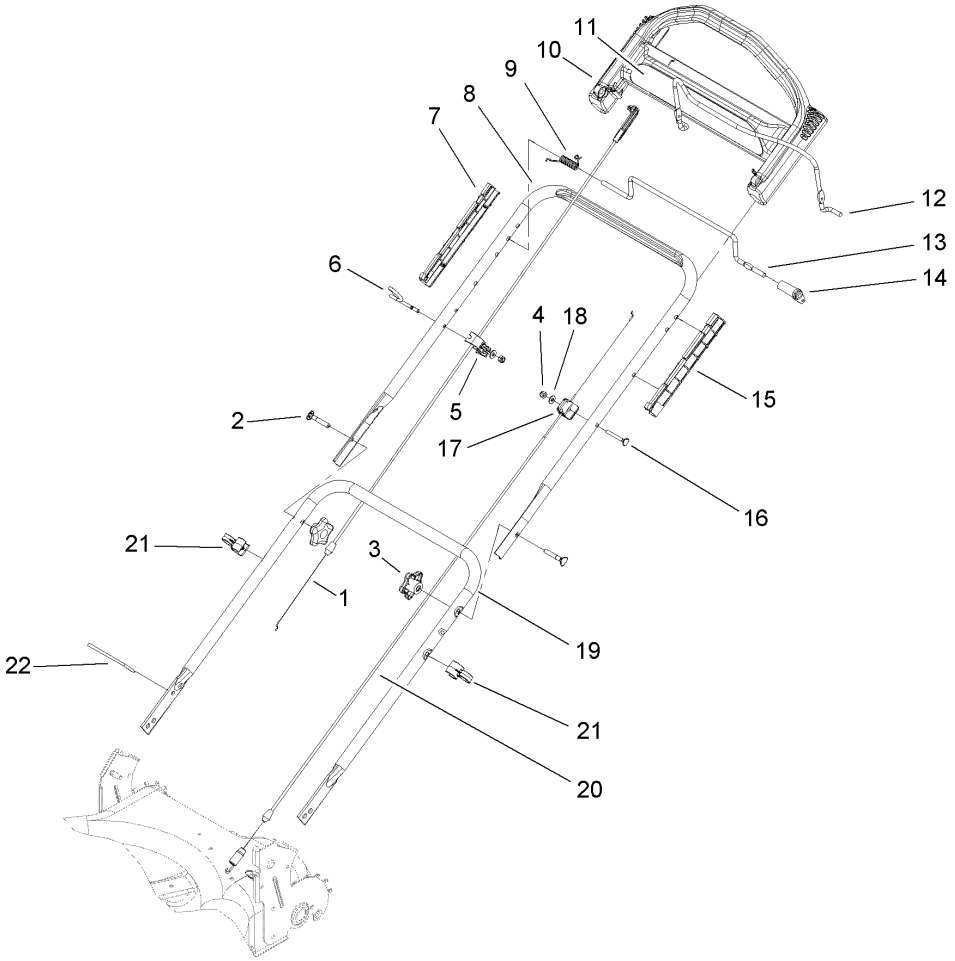

Handle Assembly

Ref	Part No.	Qty.	Description
1	104-8676	1	Cable-Brake
2	92-2260	2	Screw-Handle
3	106-4161	2	Knob-Handle
4	3296-73	2	Nut-Lock, NI
5	106-8331	1	Anchor-Cable
6	106-8330	1	Guide-Rope
7	105-6841	2	Guide-RH
8	104-8680-05	1	Handle-Upper
9	104-8690	1	Spring-Torsion
10	104-8678	1	Handle-Control
11	105-3033	1	Decal-Handle, Control
12	104-8679-03	1	Bail-Brake
13	99-1588	1	Bar-Control, Traction
14	99-1589	1	Lever-Traction
15	105-6842	2	Guide-LH
16	95-4453	1	Screw
17	92-7729	1	Anchor-Cable, Upper
18	3256-1	2	Washer-Flat
19	107-0784-05	1	Handle-Lower
20	105-1844	1	Cable-Traction
21	106-6805	2	Guide-Cable
22	614249	1	Strap-Tie

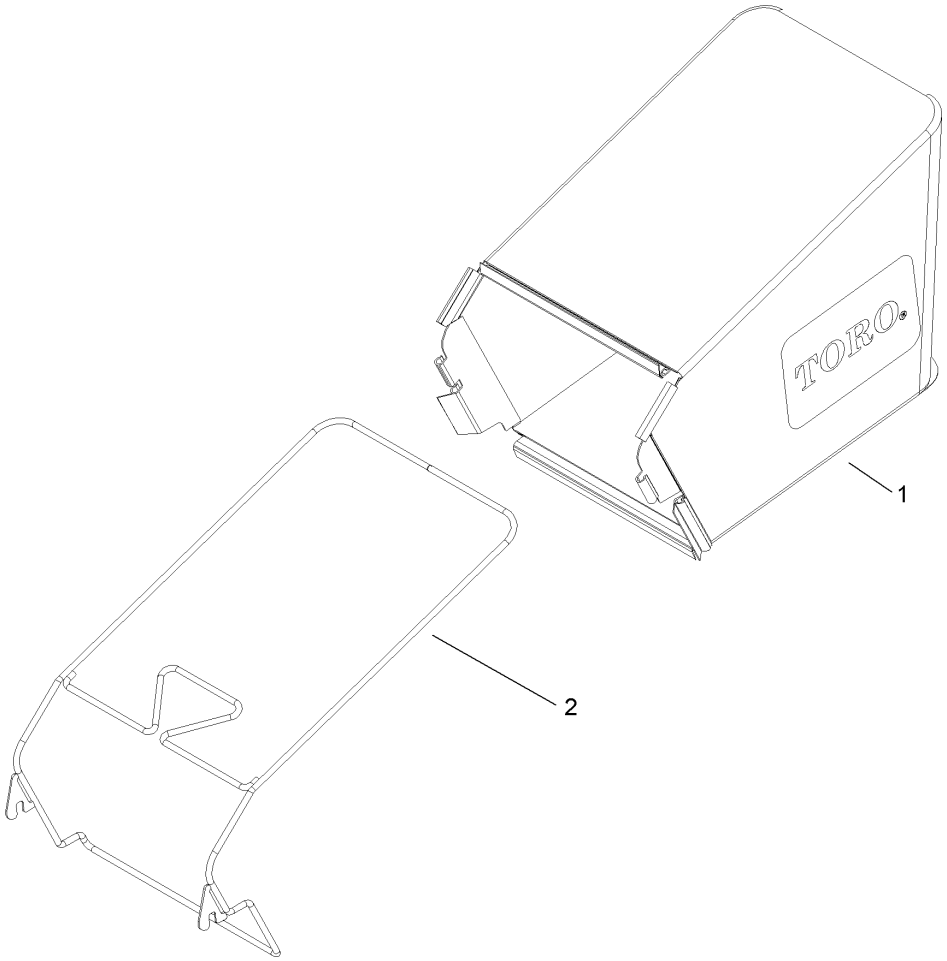

Rear Bag Assembly

Ref	Part No.	Qty.	Description
1	107-3779	1	Grass Bag ASM
2	107-3785-03	1	Bag Frame ASM

Engine Assembly
Tecumseh Lv195ea-362003b

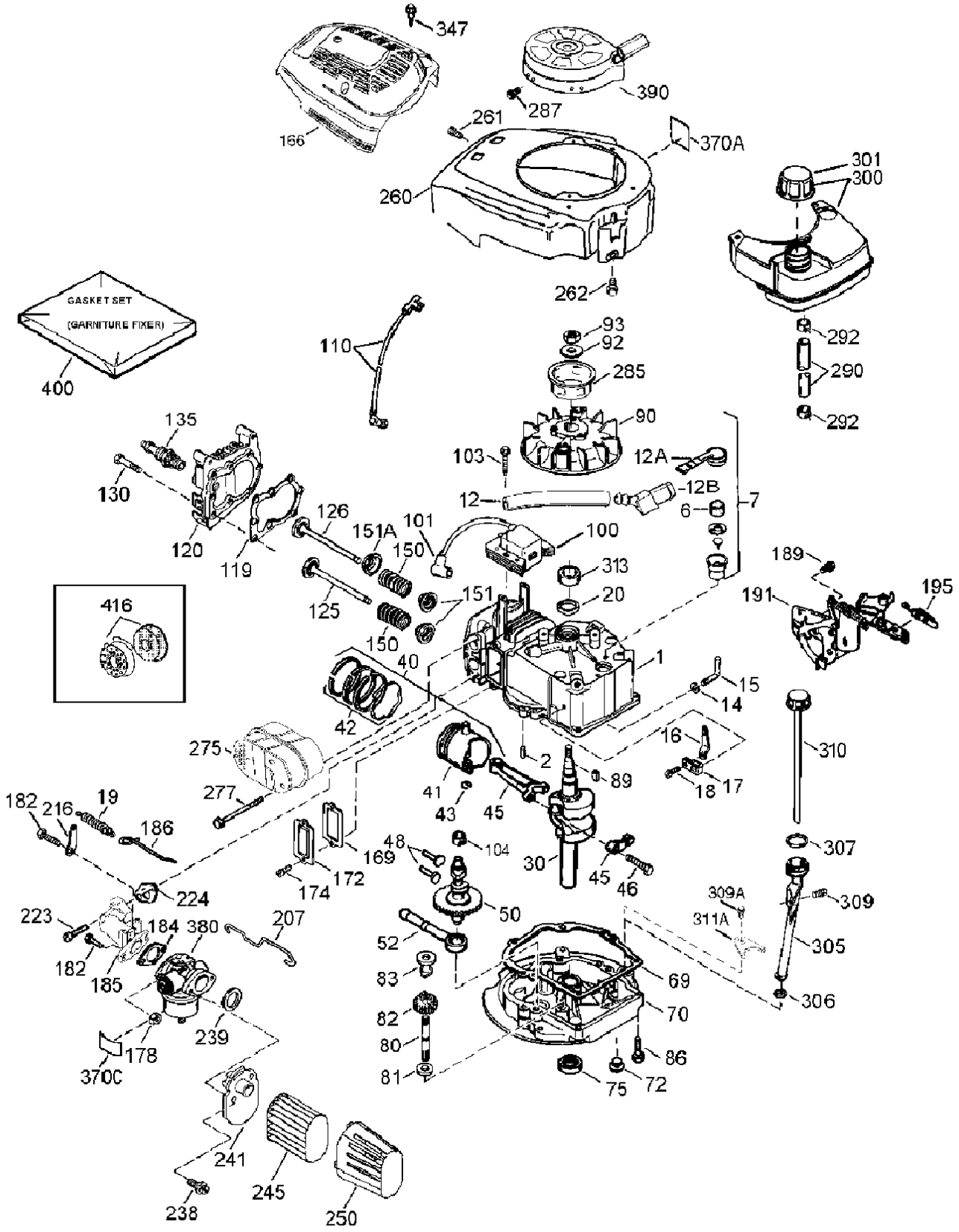

Engine Assembly
Tecumseh Lv195ea-362003b

Ref	Part No.	Qty.	Description
❸1	37465	1	Cylinder
❸2	26727	2	Pin-Dowel
❸6	33734	1	Element-Breather
❸7	36557	1	Breather ASM (Incl. Ref. #6 And 12A)
❸12	36775	1	Tube-Breather
❸12A	36558	1	Breather Cover And Tube (Incl. Ref. #12B)
❸12B	36694	1	Elbow-Tube, Breather
❸14	28277	1	Washer
❸15	30589	1	Governor Rod (Incl. Ref. #14)
❸16	34839A	1	Lever-Governor
❸17	31335	1	Clamp-Lever, Governor
❸18	651018	1	Screw
❸19	36281	1	Spring-Extension
❸20	32600	1	Seal-Oil
❸30	37692	1	Crankshaft
❸40	40027	1	Piston Pin And Ring Set (STD)
❸41	40042	1	Piston And Pin ASM (STD.) (Incl. Ref. # 43)
❸42	40006	1	Ring Set (STD)
❸43	20381	2	Ring-Retaining
❸45	36777	1	Connecting Rod ASM (Incl. Ref. #46)
❸46	32610A	2	Bolt-Rod, Connecting
❸48	27241	2	Lifter-Valve
❸50	37460	1	Camshaft (Exhaust Mcr) (Incl. Ref. #104)
❸52	29914	1	Oil Pump ASM
❸*69	37609	1	Gasket-Flange, Mounting
❸70	37608	1	Flange-Mounting (Incl. Ref. #72-83,306,309A & 311A)
❸72	37614	1	Plug-Drain, Oil
❸75	27897	1	Seal-Oil
❸80	30574A	1	Shaft-Governor
❸81	30590A	1	Washer
❸82	30591	1	Governor Gear ASM (Incl. Ref. #81)
❸83	30588A	1	Spool-Governor
❸86	650488	6	Screw (1/4–20 X 1–1/4In)
❸89	611004	1	Key-Flywheel
❸90	611112	1	Flywheel
❸92	650815	1	Washer-Belleville
❸93	650816	1	Nut-Flywheel
❸100	34443C	1	Ignition-Solid State
❸101	610118	1	Cover-Plug, Spark
❸103	651007	2	Screw
❸104	37480	1	Bushing-Cam
❸110	37047	1	Wire-Ground
❸*119	36787	1	Gasket-Cylinder Head
❸120	36825	1	Head-Cylinder
❸125	36780	1	Valve-Exhaust (1/32In Os) (Incl. 151)

Ref	Part No.	Qty.	Description
❸125	37288	1	Valve-Exhaust (STD.) (Incl. Ref. #151)
❸126	37289	1	Valve-Intake (STD.) (Incl. Ref. #151 And 151A)
❸130	6021A	8	Screw (5/16–18 X 1–7/16In)
❸135	35395	1	Spark Plug-Resistor (Rj19Lm)
❸150	31672	2	Spring-Valve
❸151	31673	2	Cap-Spring, Valve
❸151A	40017	1	Seal-Valve, Intake
❸166	37694	1	Shroud-Engine
❸*169	36783	1	Gasket-Cover, Valve
❸172	36784	1	Cover-Valve
❸174	30200	2	Screw (10–24 X 9/16In)
❸178	29752	2	Nut And Lock Washer ASM
❸182	6201	2	Screw (1/4–28 X 7/8In)
❸*184	26756	1	Gasket-Carburetor To Intake Pipe
❸185	37466	1	Pipe-Intake
❸186	32653	1	Link-Governor
❸189	650839	2	Screw (1/4–20 X 3/8In)
❸191	36559A	1	Bracket-S.E. Brake (Incl. Ref. #195)
❸195	610973	1	Terminal
❸207	34336A	1	Link-Throttle
❸216	33086	1	Lever-Adjusting, R.P.M.
❸223	650451	2	Screw (1/4–20 X 1In)
❸*224	36786	1	Gasket-Pipe, Intake
❸238	650932	2	Screw (10–32 X 49/64In)
❸*239	34338	1	Gasket-Cleaner, Air
❸241	36919	1	Collar-Cleaner, Air
❸245	36905	1	Filter-Cleaner, Air
❸250	37122	1	Cover-Cleaner, Air
❸260	37696A	1	Housing-Blower
❸261	30200	2	Screw (10–24 X 9/16In)
❸262	650831	2	Screw (1/4–20 X 1/2In)
❸275	37498	1	Muffler
❸277	650988	2	Screw (1/4–20 X 2–9/32In)
❸285	35000A	1	Cup-Starter
❸287	650926	2	Screw (8–32 X 21/64In)
❸290	29774	1	Line-Fuel
❸292	26460	2	Clamp-Line, Fuel
❸300	35586A	1	Fuel Tank (Incl. Ref. #292 And 301)
❸301	36246	1	Cap-Fuel
❸305	35647	1	Tube-Fill, Oil
❸*306	37610	1	O–Ring
❸307	35499	1	O–Ring
❸309	650562	1	Screw (10–32 X 1/2In)
❸309A	650783	1	Screw (10–24 X 3/4In)
❸310	35648	1	Dipstick
❸311A	37611	1	Bracket-Down, Hold
❸313	34080	1	Spacer
❸347	650898A	1	Screw (10–32 X 27/32In)

Engine Assembly
Tecumseh Lv195ea-362003b (continued)

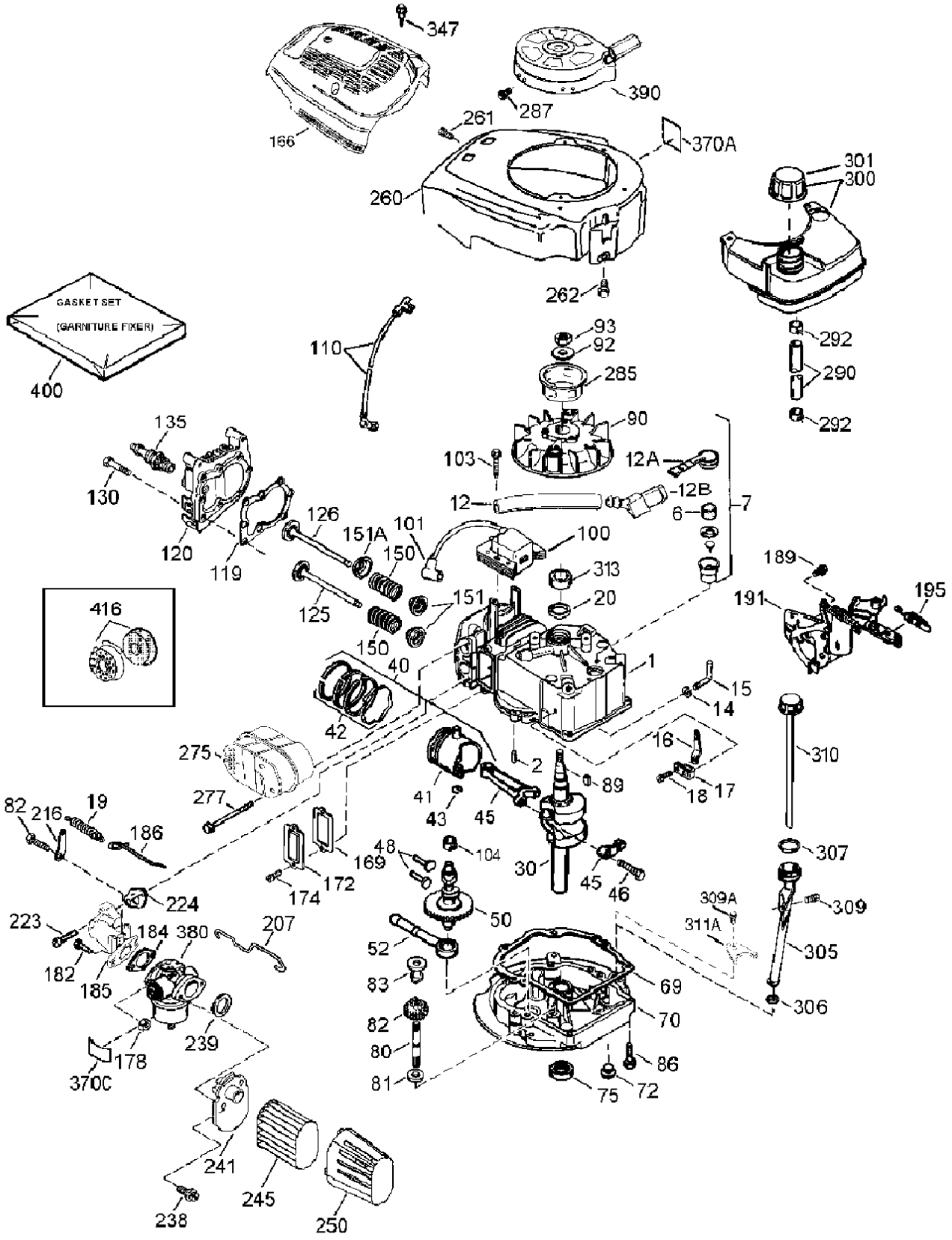

Engine Assembly
Tecumseh Lv195ea-362003b (continued)

Ref	Part No.	Qty.	Description
❸370	35977	1	Decal-Warning
❸370A	36261	2	Decal-Lubrication
❸370C	37695	1	Decal-Primer
❸380	640303	1	Carburetor (Incl. Ref. #184)
❸390	590739	1	Starter-Rewind
❸400	37613	1	Gasket Set
❸416	37530	1	Spark Arrestor Kit (Optional)
❸	750876	1	Shortblock

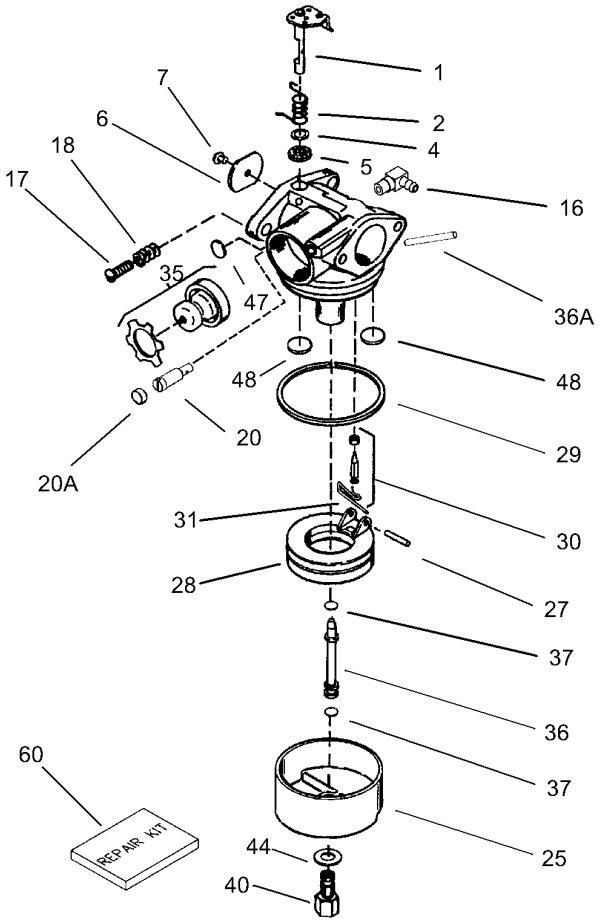

Carburetor Assembly No. 640303
Tecumseh Model No. Lv195ea-362003b

Ref	Part No.	Qty.	Description
❸0	640303	1	Carburetor (Incl. Ref. #184 Of Engine Parts List)
❸1	631615	1	Throttle Shaft And Lever ASM
❸2	631767	1	Spring-Return, Throttle
❸*4	631184	1	Washer-Seal, Dust
❸*5	631183	1	Seal-Dust, Throttle
❸ 6	640070	1	Shutter-Throttle
❸*7	650506	1	Screw-Shutter
❸16	631807	1	Fitting-Fuel
❸17	651025	1	Screw-Throttle Crack And Idle Speed
❸18	630766	1	Spring-Tension
❸20	640018	1	Screw-Idle Restrictor
❸*20A	640200	1	Cap-Screw, Idle Restrictor
❸25	631867	1	Bowl-Float
❸*27	631024	1	Shaft-Float
❸28	632802	1	Float
❸*29	631028	1	O Ring-Bowl, Float
❸*30	632807	1	Inlet Needle, Seat, & Clip (Incl. Ref. # 31)
❸*31	631022	1	Clip-Spring
❸35	640259	1	Primer Bulb/Retainer Ring
❸36	640019	1	Tube-Main Nozzle
❸36A	632766	1	Tube-Carburetor
❸*37	632547	2	O Ring-Nozzle Tube, Main

Ref	Part No.	Qty.	Description
❸40	640087	1	Nut-High Speed Bowl
❸*44	27110A	1	Washer-Nut, Bowl
❸*47	630748	1	Plug-Welch, Idle Mixture Well
❸*48	631027	2	Plug-Welch, Atmospheric Vent
❸60	632809	1	Repair Kit (Incl. Items Marked * In Notes)

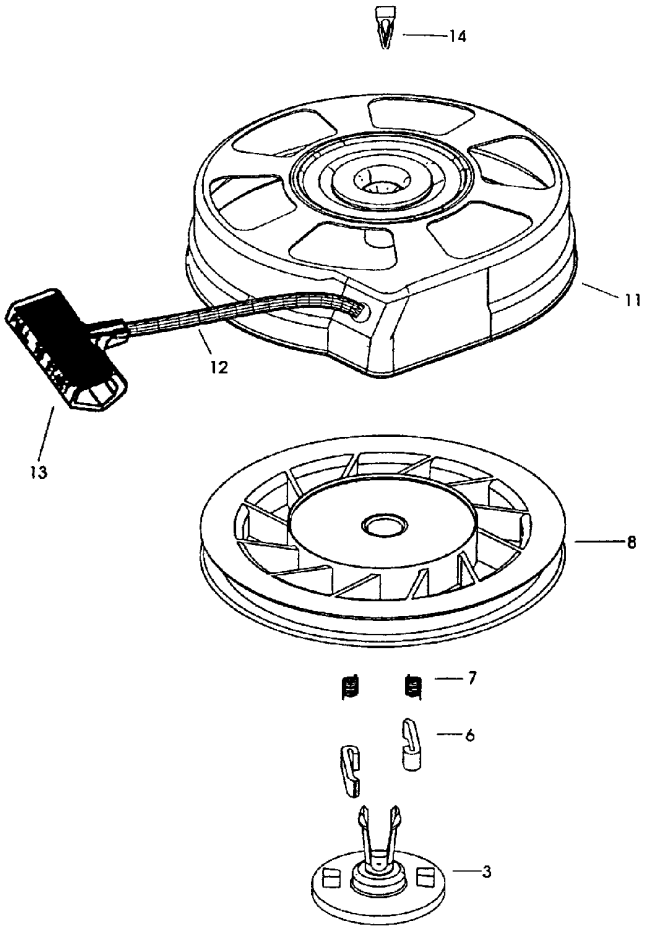

Recoil Starter Assembly No. 590739
Tecumseh No. Lv195ea-362003b

Ref	Part No.	Qty.	Description
❸0	590739	1	Starter-Rewind
❸3	590740	1	Retainer
❸6	590616	2	Dog-Starter
❸7	590617	2	Spring-Dog
❸8	590618A	1	Pulley And Rewind Spring ASM
❸11	590638A	1	Starter Housing ASM
❸12	590535	1	Rope-Starter (98In X 9/64In Diameter)
❸13	590701	1	Handle-Starter
❸14	590760	1	Clip-Spring

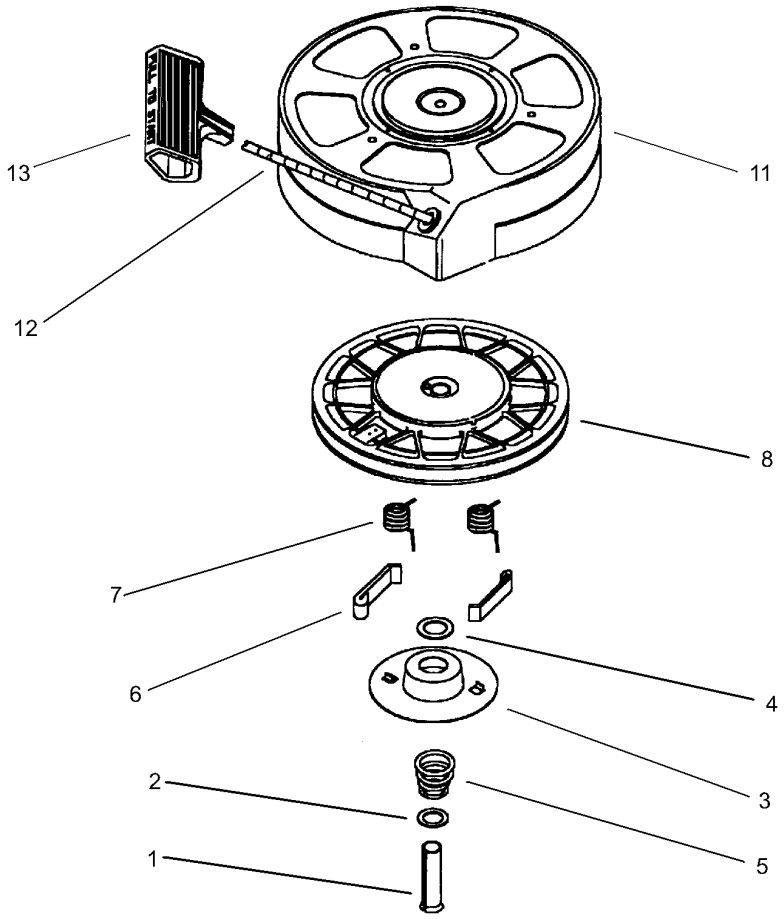

Recoil Starter Assembly No. 590702 (Optional)
Tecumseh Lv195ea-362003b

Ref	Part No.	Qty.	Description
❸0	590702	1	Starter-Recoil
❸1	590599A	1	Spring Pin ASM
❸2	590600	1	Washer
❸3	590696	1	Retainer
❸4	590601	1	Washer
❸5	590697	1	Spring-Brake
❸6	590698	2	Dog-Starter
❸7	590699	2	Spring-Dog
❸8	590700	1	Pulley And Rewind Spring ASM
❸11	590703A	1	Starter Housing ASM
❸12	590535	1	Rope-Starter (98In X 9/64In Diameter)
❸13	590701	1	Handle-Starter

NOTES

NOTES

NOTES


TORO®