FORM NO. 3313-695

TORO®

MODEL NO. 38000C-9900001 & UP

PARTS CATALOG

TORO S-120 SNOWTHROWER

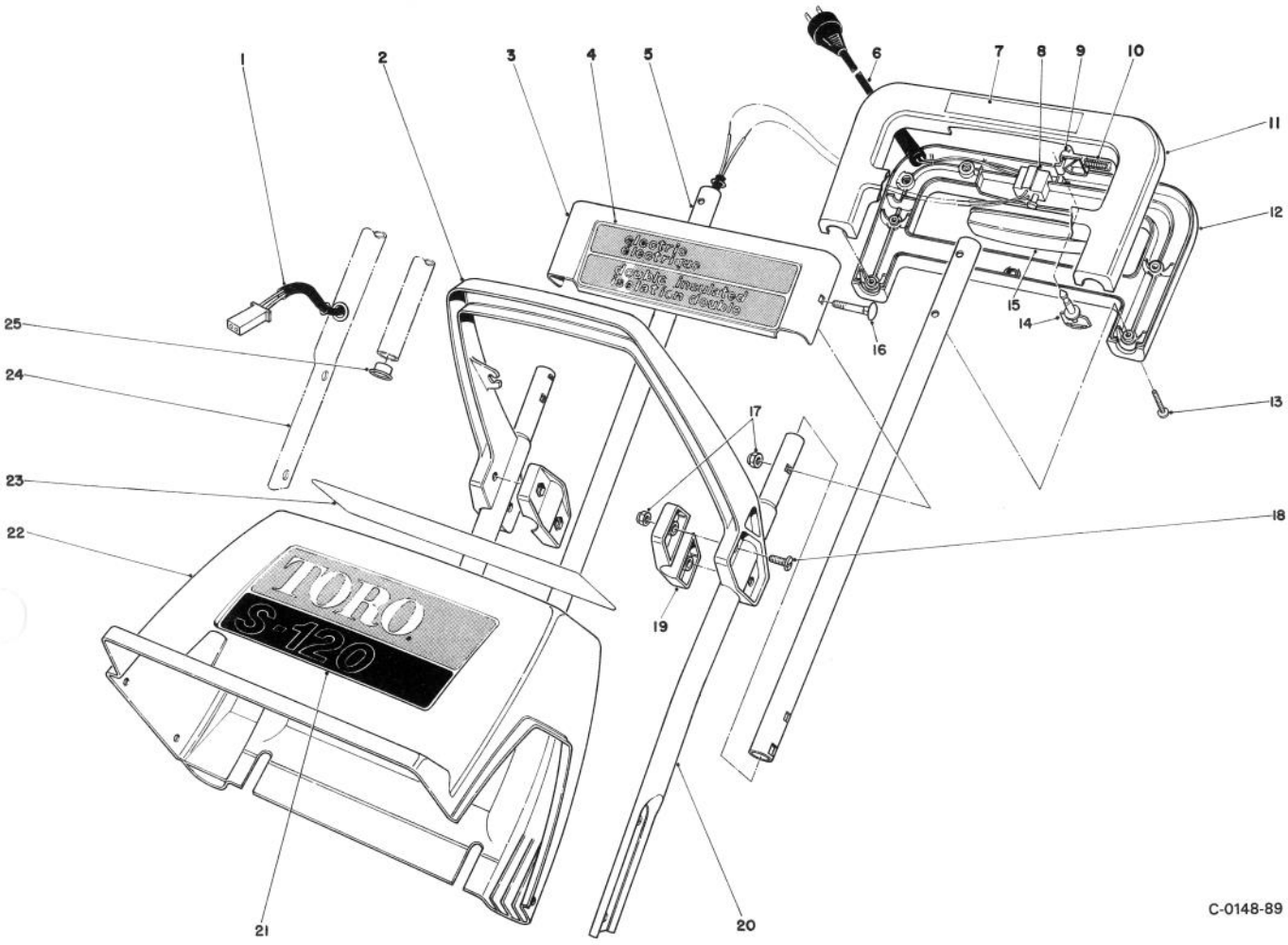

HANDLE ASSEMBLY

Ref. No.	Part No.	Description	No. Used
1	37-6450	Wire Harness	1
2	37-6260	Middle Handle	1
3	37-6411	Escutcheon Plate	1
4	39-5250	Decal — Electric	1
5	56-6520	Upper Tube	2
6	38-8390	Cord Supply	1
7	39-5230	Decal — Handle	1
8	36-8340	Switch	1
9	37-8000	Lockout — Switch	1
10	37-7990	Spring Compression	1
11	39-2460	Handle — Upper Control	1
12	39-2470	Handle — Lower Control	1
13	32104-121	Screw	8

Ref. No.	Part No.	Description	No. Used
14	38-8310	Key	1
15	37-8010	Switch Bar	1
16	37-6320	Carriage Bolt	2
17	3296-42	Nut	6
18	3290-133	Screw — Round Head	4
19	37-6190	Clamp — Middle Handle	2
20	56-6540	Handle — Lower L.H.	1
21	37-6470	Decal — Toro S-120	1
22	37-6210	Shroud — S-120	1
23	64-8900	Decal — CSA	1
24	56-6530	Handle — Lower R.H.	1
25	256-288	Snap Bushing	1

©The TORO Company — 1988

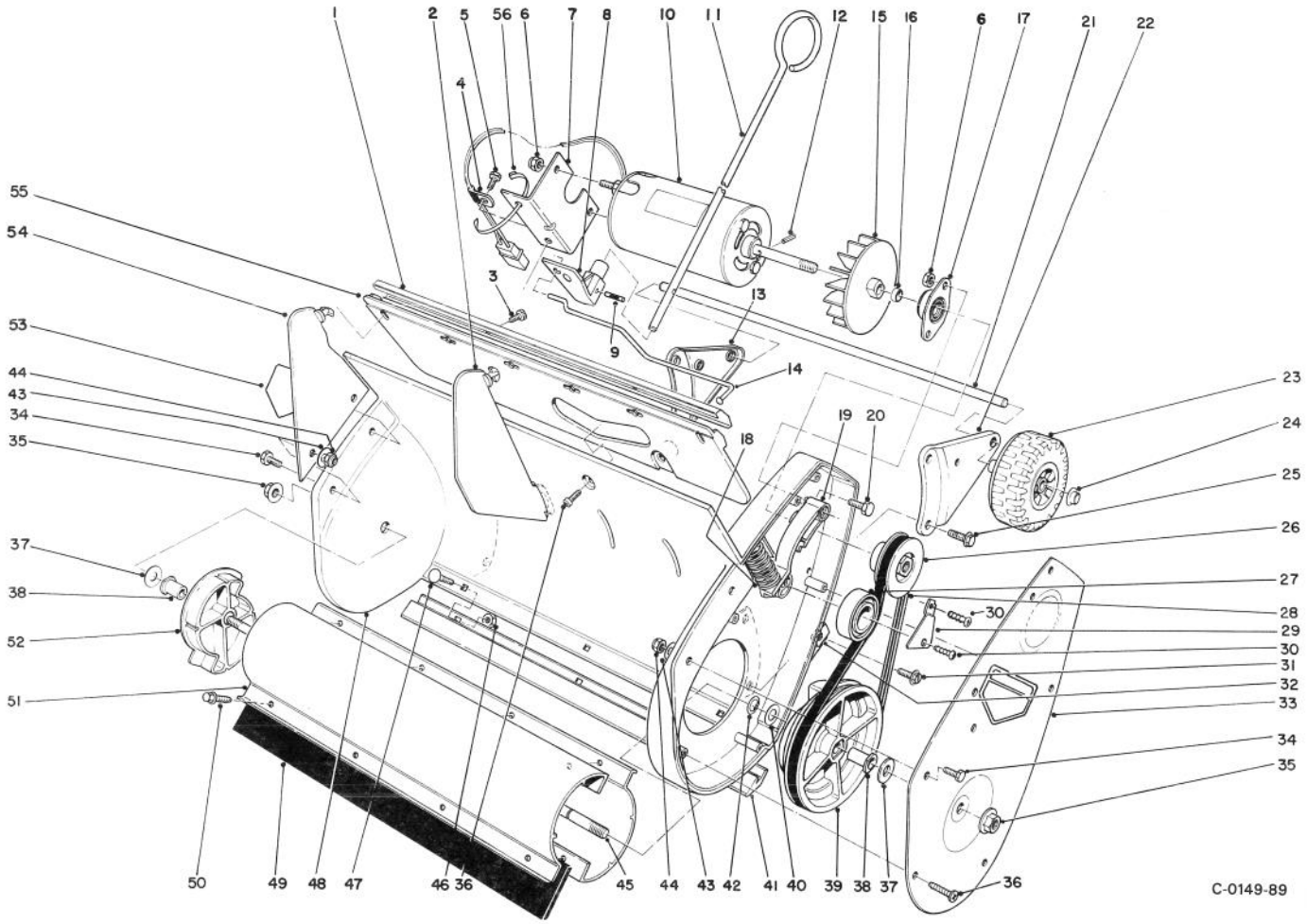

LOWER MAIN FRAME ASSEMBLY

Ref. No.	Part No.	Description	No. Used
1	37-6340	Moulding	1
2	61-8830	Vane — Inner	4
3	32104-77	Screw	2
4	2412-72	Insulated Closed Clip	1
5	32104-124	Screw	2
6	3296-42	Nut	4
7	37-6380	Bracket — Mounting	1
8	39-3130	Bracket — Vane Adjustment	1
9	3284-4	Groove Pin	1
10	42-1430	Motor	1
11	39-3140	Rod — Vane Adjustment	1
12	32121-101	Spring Pin	1
13	64-8870	Wheel Bracket R.H.	1
14	37-5970	Linkage Vane Adjustment	1
15	37-6120	Fan	1
16	52-1760	Spacer	1
17	52-9910	Bearing — Flanged	1
18	39-2190	Idler Spring	1
19	39-2170	Idler Arm	1
20	321-2	Screw	2
21	37-6460	Axle Shaft	1
22	64-8880	Wheel Bracket L.H.	1
23	37-5960	Wheel	2
24	32112-1	Push Nut	2
25	11-9760	Screw	6
26	37-6040	Drive Pulley	1
27	36-7420	Ball Bearing	1
28	37-6010	Drive Belt	1

Ref. No.	Part No.	Description	No. Used
29	39-2180	Retainer — Idler Pulley	1
30	32104-130	Screw	2
31	32144-34	Screw	3
32	3290-171	Tinnerman Nut	3
33	56-6511	Cover — Belt Case	1
34	3290-321	Screw	4
35	32128-25	Nut — Flange	2
36	32104-121	Screw	7
37	39-5190	Thrust Washer	2
38	37-6070	Rotor Bushing	2
39	37-6050	Pulley — Driven	1
40	37-8080	Thrust Washer	1
41	37-6150	Scraper	1
42	32120-46	Retaining Ring	1
43	38-5710	Washer	4
44	3296-2	Nut	4
45	37-6330	Shaft — Rotor	1
46	32149-2	Nut	3
47	3229-11	Carriage Bolt	3
48	42-3900	Housing	1
49	37-6391	Blade — Rotor	2
50	32144-64	Screw — Thread Forming	8
51	37-6371	Rotor	2
52	37-6060	End Cap Rotor	1
53	56-6270	Decal — Danger	2
54	61-8810	Vane — Outer	2
55	37-6270	Vane — Mount	1
56	3290-378	Tie Strap	1

PRODUCT CHANGES

In an effort to make improvements available to TORO owners as quickly as possible, minor changes are incorporated into Toro's products from time to time that do not become immediately shown in the Parts Catalog. If such a change apparently has been made in your unit, which is not reflected in your manual, see your TORO Distributor or his Authorized TORO Service Dealer for information and part numbers.

IDENTIFICATION AND ORDERING

Model and Serial Numbers

The S-120 has two identification numbers. A model number and a serial number. The two numbers are stamped on a decal which is located on lower right handle. In any correspondence concerning the S-120, supply model and serial numbers to assure that correct information and replacement parts are obtained.

To order replacement parts from an Authorized TORO Service Dealer, supply the following information:

1. Model and serial numbers of the S-120.
2. Part number, description, and quantity of part(s) desired.

NOTE: Do not order by reference number if a parts catalog is being used; use the PART NUMBER.

Keep Your TORO All Toro Genuine TORO PARTS & ACCESSORIES ***Insist on Genuine Toro Parts***

MAINTENANCE RECORD

Date	Hours Used	Check Scraper	Check Belt	Check Supply Cord	Preparing For Storage	Comments

The Toro Promise

Toro S-120 Snowthrower
A FULL ONE YEAR WARRANTY

The Toro Company warrants your TORO Product against defects in material or workmanship. During the warranty period, Toro will, at its option, replace a defective product with a new or rebuilt unit, or will repair or replace any defective parts. The following time periods from the date of purchase apply:

Residential ..... 1 Year
Residential Products Used Commercially .... 45 Days

The cost of replacement or repair is included, but the customer pays the transportation costs.

Should you feel your TORO Product is defective and wish to rely on The Toro Promise, you may return it to:

1. The original place of purchase

OR

2. A TORO Electrical Service Dealer

OR

3. The Toro Co.
   269 Hespeler Road
   Steinbach, Manitoba
   Canada R0A 2A0

Upon return of your unit to one of the above, it will be inspected and you will be advised whether the product is defective. If defective, arrangements will be made for repair or replacement without extra charge to you.

If for any reason you are dissatisfied with the analysis of the defect or the service performed, you may contact us. Write:

TORO Customer Service Department
8111 Lyndale Avenue South
Minneapolis, MN 55420

THERE IS NO OTHER EXPRESS WARRANTY

THE TORO COMPANY IS NOT LIABLE FOR INDIRECT OR CONSEQUENTIAL DAMAGES IN CONNECTION WITH THE USE OF THE PRODUCT.

Some states do not allow the exclusion or limitation of incidental or consequential damages, so the above limitation or exclusion may not apply to you.

This Warranty applies only to parts or components which are defective and does not cover repairs necessary due to normal wear, misuse, accidents, or lack of proper maintenance. Regular, routine maintenance of the unit to keep it in proper operating condition is the responsibility of the owner.

All warranty repairs reimbursable under The Toro Promise must be performed by a TORO Electrical Service Dealer using Toro approved replacement parts.

Repairs or attempted repairs by anyone other than a TORO Electrical Service Dealer are not reimbursable under The Toro Promise. In addition, these unauthorized repair attempts may result in additional malfunctions, the correction of which is not covered by warranty.

This warranty gives you specific legal rights, and you may also have other rights which vary from state to state.

COUNTRIES OTHER THAN THE UNITED STATES OR CANADA

Customers who have purchased TORO products exported from the United States or Canada should contact the TORO Distributor (Dealer) to obtain guarantee policies for your country, province or state. If for any reason you are dissatisfied with your Distributor's service or have difficulty obtaining guarantee information, contact the TORO importer. If all other remedies fail, you may contact us at The Toro Company.