FORM NO. 3313-719

TORO®

MODEL NO. 30133-9000001 & UP

PARTS CATALOG

32" CUTTING UNIT WIDE AREA MOWER

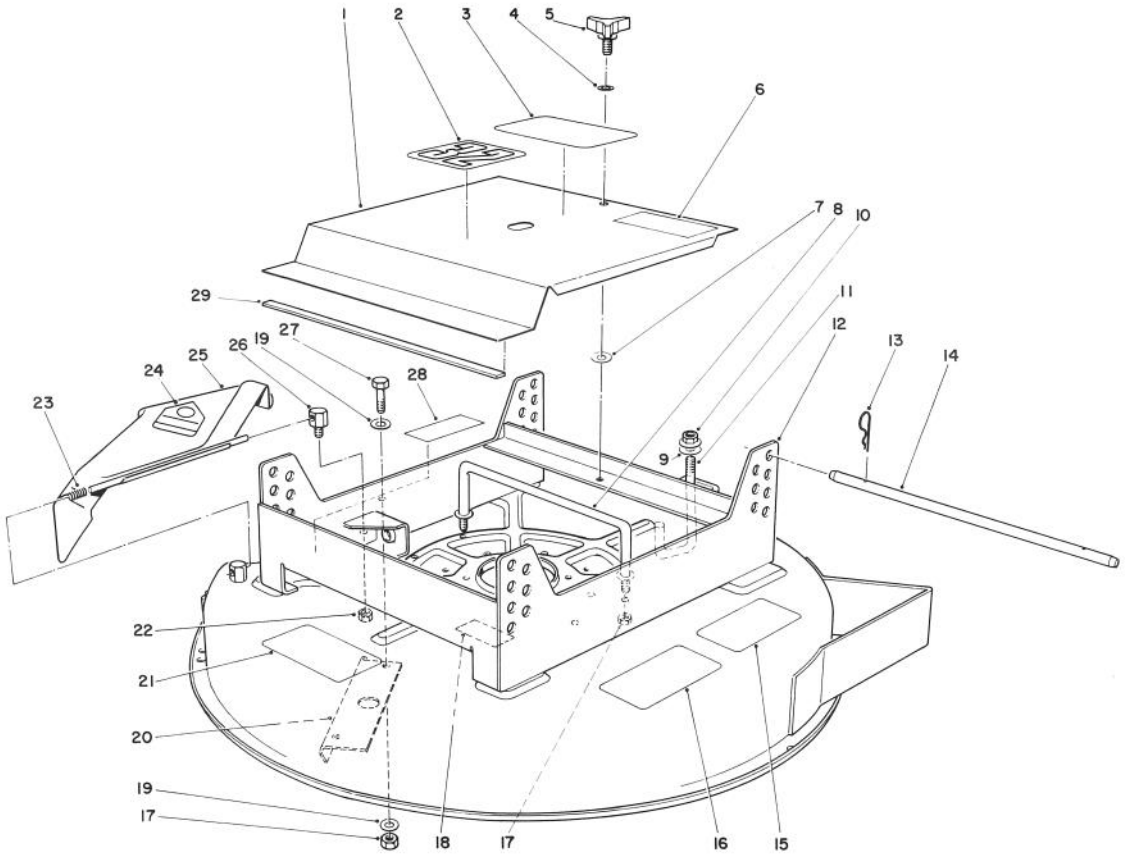

T-0621-89

CUTTING UNIT ASSEMBLY

Ref. No.	Part No.	Description	No. Used
1	67-6160	Cover (Incl. Ref. #2-7 & 29)	1
2	67-6170	Decal — 32"	1
3	62-5550	Decal — Toro	1
4	3256-24	Washer — Plain	1
5	62-6520	Knob — Cover	1
6	54-0910	Decal — Warning	1
7	32151-72	Ring — Retaining	1
8	67-6870	Guide — Belt	1
9	3256-4	Flat Washer	2
10	32128-43	Nut — Flange	1
11	67-6890	Guide — Belt	2
12	67-6090	Deck W.A.	1
13	3290-355	Pin — Hair, Cotter	4
14	67-6140	Rod — Support	2
15	42-6860	Decal	1

Ref. No.	Part No.	Description	No. Used
16	66-1330	Decal	1
17	3296-29	Nut — Lock	5
18	67-5360	Decal	1
19	3256-23	Washer — Plain	4
20	44-5720	Baffle — Deck	1
21	66-1340	Decal	1
22	32153-2	Nut — Lock	1
23	28-8010	Spring	1
24	54-9220	Decal — Deflector	1
25	44-5930	Deflector Assy. (Incl. Ref. #24)	1
26	28-7350	Post — Pivot, Deflector	1
27	322-4	Screw — Cap, Hex Hd.	3
28	66-6380	Decal	1
29	67-6180	Strip — Magnetic	1

©The Toro Company — 1988

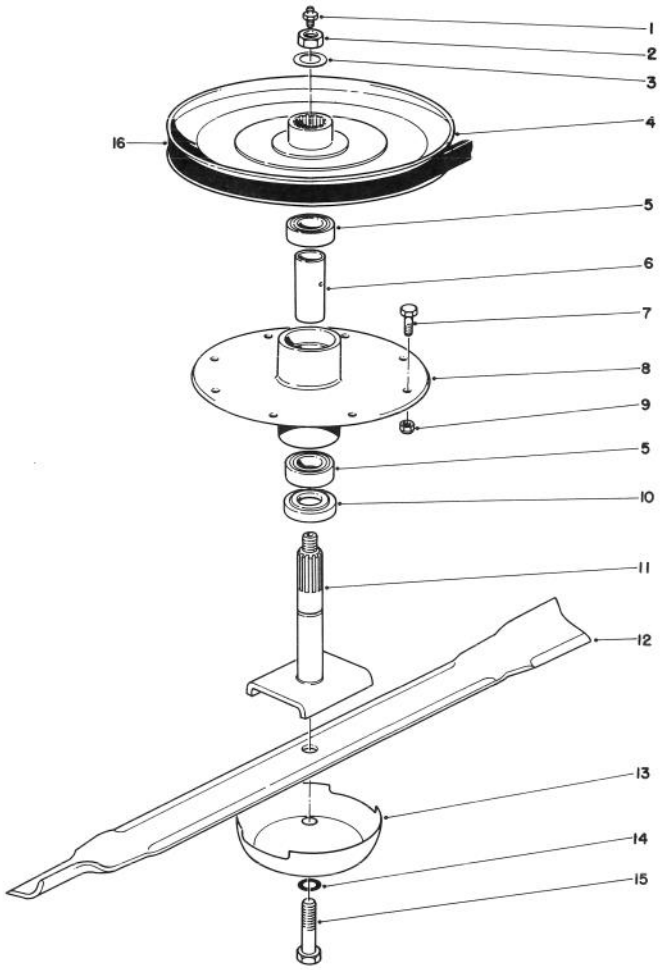

T-0622-89

DRIVE SPINDLE ASSEMBLY

Ref. No.	Part No.	Description	No. Used
1	302-5	Fitting — Grease	1
2	32152-6	Nut — Lock	1
3	3256-27	Washer — Plain	1
4	67-6030	Pulley	1
5	251-257	Bearing	2
6	67-6070	Spacer	1
7	322-4	Screw — Cap, Hex Hd.	8
8	67-6060	Housing — Spindle	1

Ref. No.	Part No.	Description	No. Used
9	3296-29	Nut — Lock	7
10	67-6080	Spacer	1
11	67-6040	Shaft — Spindle	1
12	33-4750	Blade	1
13	7-3522	Cup — Anti-Scalp	1
14	3253-23	Washer — Lock	1
15	51-4060	Screw — Cap, Hex Hd.	1
16	67-6920	V-Belt, Deck Drive	1

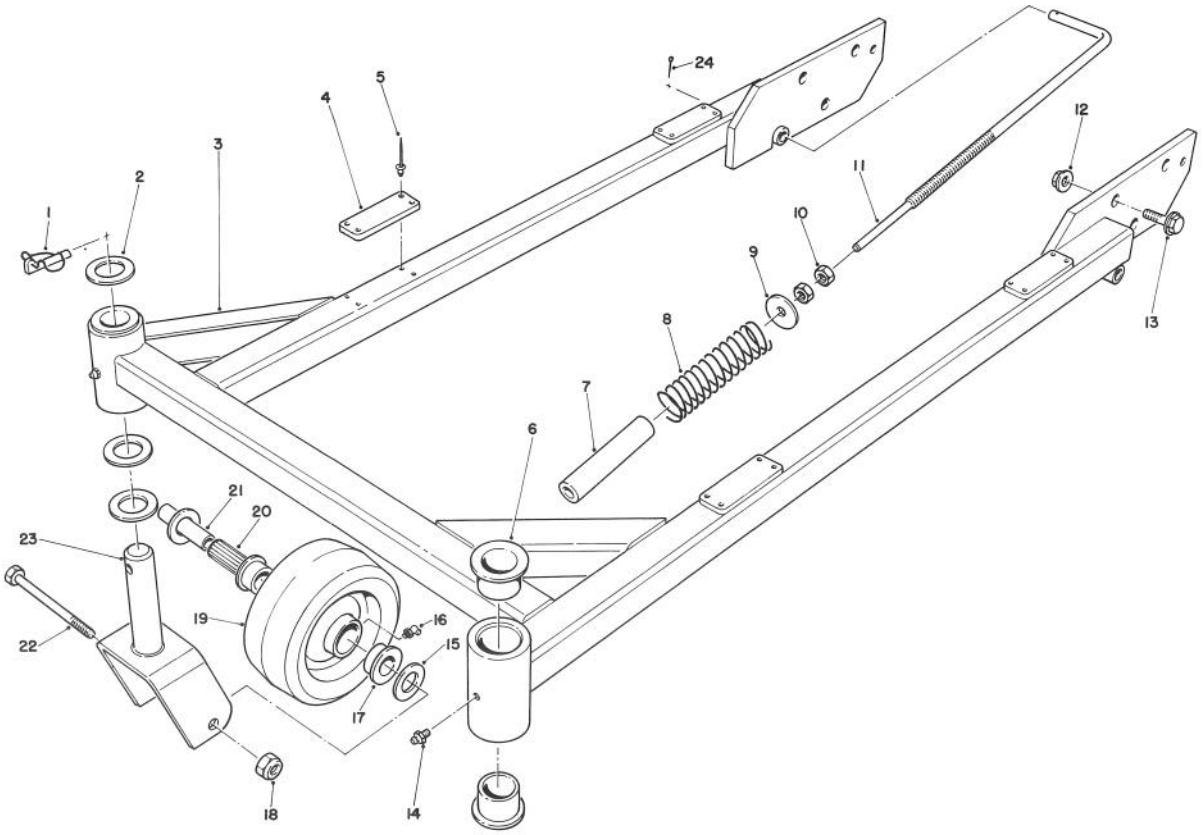

T-0623-89

FRAME ASSEMBLY

Ref. No.	Part No.	Description	No. Used
1	3290-384	Pin — Lynch, Safety Type	2
2	3-6781	Washer — Plain	6
3	67-6230	Frame (Incl. Ref. #4-6 & 14)	1
4	67-6320	Pad — Rubber	4
5	3269-24	Rivet — Pop	16
6	28-9290	Bushing	4
7	51-3480	Sleeve Tube	2
8	47-0960	Spring	2
9	51-3500	Washer — Plain	2
10	3218-5	Nut — Hex	4
11	51-3491	Rod — Adjustment	2
12	32128-27	Nut — Hex, Flange	6
13	3234-6	Screw — Flange, Hex Hd.	6

Ref. No.	Part No.	Description	No. Used
14	302-5	Fitting — Grease	2
15	67-6570	Spacer — Wheel	4
16	302-11	Fitting — Grease	2
17	62-5580	Bushing	4
18	32153-5	Nut — Hex	2
19	63-8400	Wheel — Castor (Incl. Ref. #16, 17 & 20)	2
20	63-8580	Bearing — Roller	2
21	67-6220	Spanner	2
22	325-18	Screw — Cap, Hex Hd.	2
23	67-6190	Fork — Caster	2
24	3272-7	Cotter Pin	2

The Toro Promise

A ONE YEAR LIMITED WARRANTY

The Toro Company promises to repair your TORO Product if defective in materials or workmanship. The following time periods from the date of purchase apply:

Commercial Products ..... 1 Year

The costs of parts and labor are included, but the customer pays the transportation costs on walk rotary mowers with cutting unit widths of less than 25".

If you feel your TORO product is defective and wish to rely on The Toro Promise, the following procedure is recommended:

1. Contact your Authorized TORO Distributor or Commercial Dealer (the Yellow Pages of your telephone directory is a good reference source).
2. The TORO Distributor or Commercial Dealer will advise on the arrangements that can be made to inspect and repair your product.
3. The TORO Distributor or Commercial Dealer will inspect the product and advise you whether the product is defective and, if so, make all repairs necessary to correct the defect without an extra charge to you.

If for any reason you are dissatisfied with the distributor's analysis of the defect or the service performed, you may contact us.

Write:

TORO Commercial Products Service Department
8111 Lyndale Avenue South
Minneapolis, Minnesota 55420

The above remedy of product defects through repair by an Authorized TORO Distributor or Commercial Dealer is the purchaser's sole remedy for any defect.

THERE IS NO OTHER EXPRESS WARRANTY. ALL IMPLIED WARRANTIES OF MERCHANTABILITY AND FITNESS FOR USE ARE LIMITED TO THE DURATION OF THE EXPRESS WARRANTY.

Some states do not allow limitations on how long an implied warranty lasts, so the above limitation may not apply to you.

This Warranty applies only to parts or components which are defective and does not cover repairs necessary due to normal wear, misuse, accidents, or lack of proper maintenance. Regular, routine maintenance of the unit to keep it in proper condition is the responsibility of the owner.

All warranty repairs reimbursable under the Toro Promise must be performed by an Authorized TORO Commercial Dealer or Distributor using Toro approved replacement parts.

Repairs or attempted repairs by anyone other than an Authorized TORO Distributor or Commercial Dealer are not reimbursable under the Toro Promise. In addition, these unauthorized repair attempts may result in additional malfunctions, the correction of which is not covered by warranty.

THE TORO COMPANY IS NOT LIABLE FOR INDIRECT, INCIDENTAL OR CONSEQUENTIAL DAMAGES IN CONNECTION WITH THE USE OF THE PRODUCT INCLUDING ANY COST OR EXPENSE OF PROVIDING SUBSTITUTE EQUIPMENT OR SERVICE DURING PERIODS OF MALFUNCTION OR NON-USE.

Some states do not allow the exclusion or limitation of incidental or consequential damages, so the above limitation or exclusion may not apply to you.

This warranty gives you specific legal rights, and you may also have other rights which vary from state to state.

COUNTRIES OTHER THAN THE UNITED STATES OR CANADA

Customers who have purchased TORO products exported from the United States or Canada should contact their TORO Distributor (Dealer) to obtain guarantee policies for your country, province or state. If for any reason you are dissatisfied with your Distributor's service or have difficulty obtaining guarantee information, contact the TORO importer. If all other remedies fail, you may contact us at The Toro Company.

LTS-809471