Form Number 3354-995 Rev A

8-Blade DPA Reel Mower
Greensmaster® 3000 Series

Model No. 04610 - 260006001 and up.

Parts Catalog

Ordering Replacement Parts
To order replacement parts, please supply the part number, the quantity, and the description of each part desired.

Understanding Reference Numbers
Each Identified part in an illustration has a reference number. The reference number for a part also appears in the parts list, along with other information about the part.

This catalog uses two special reference number formats, one to indicate parts in a service assembly and another to indicate the quantity of a given part in an illustration.

Service Assembly Reference Numbers
Parts in service assemblies have reference numbers in the form a:b. The a represents the reference number of the entire service assembly and the b represents a sequential number unique to each part within the service assembly.

For example, a wheel assembly might be identified by reference number 6, the tire by 6:1, the valve by 6:2, and the wheel by 6:3. When you order the assembly identified by reference number 6, you receive all parts identified by reference numbers 6:1, 6:2, and 6:3. However, you may also order any part individually. Reference numbers of this type appear in illustrations and in part lists.

Reference Numbers Indicating Quantity
In an illustration, if a reference number indicates more than one part, the reference number has the form nX y. The n represents the quantity of the part, the X is the multiplication symbol, and the y represents the reference number.

For example, in an illustration, the reference number 2X 37 means that two of the parts identified by reference number 37 are indicated.

© The Toro Company - 2006
All Rights Reserved

Register your product at www.Toro.com

Contents

Description	Page	Description	Page
Frame Assembly	 3	Rear Roller Assembly	 5
Blade Assembly	 4	Attachments and Accessories List	 6

Part Description Abbreviations

Part descriptions in this catalog may include the following abbreviations.

AR. . . . . as required
ASM. . . . . assembly
BBC. . . . . blade brake clutch
CARR. . . . . carriage
DEG. . . . . degrees
EXT. . . . . external
FH. . . . . flat head
GA. . . . . gauge
HD. . . . . heavy-duty
HF. . . . . hex flange
HH. . . . . hex head
HHF. . . . . hex head flange
HHFTF. . . . . hex head flange thread forming
HJ. . . . . hex jam
HLH. . . . . hex lag head
HOC. . . . . height-of-cut
HSBH. . . . . hex socket button head
HSFH. . . . . hex socket flat head
HSH. . . . . hex socket head
HWH. . . . . hex washer head
HWHTF. . . . . hex washer head thread forming
HYD. . . . . hydraulic
LH. . . . . left hand
NI. . . . . nylon insert
NPTF. . . . . national pipe thread fine
PFH. . . . . phillips flat head
PPH. . . . . phillips pan head
PPHTF. . . . . phillips pan head thread forming
PRH. . . . . phillips round head
PTH. . . . . phillips truss head
PTO. . . . . power-take-off
RH. . . . . right hand
ROPS. . . . . roll-over protection system
SFH. . . . . slotted fillister head
SHH. . . . . slotted hex head
SHWH. . . . . slotted hex washer head
SPH. . . . . slotted pan head
SQH. . . . . square head
SRH. . . . . slotted round head
STD. . . . . standard
TAP. . . . . self tapping
TTH. . . . . torx truss head

Footnotes

❶ Not serviced separately

❷ Optional Equipment

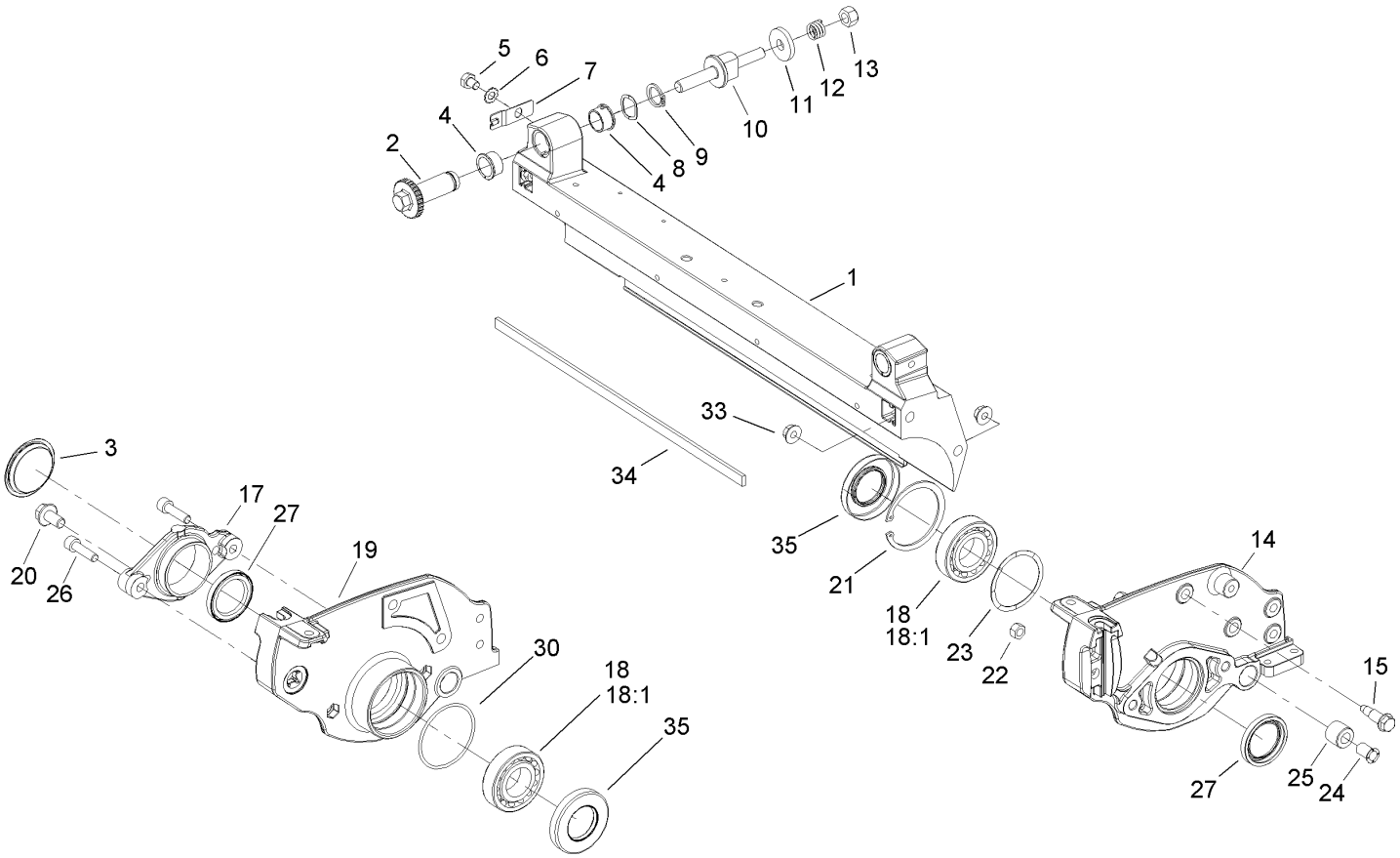

Frame Assembly

Ref	Part No.	Qty.	Description
1	105-5799	1	Frame
2	106-5363	2	Shaft-Adjuster
3	2410-30	1	Cap-Plastic
4	106-5344	4	Bushing-Flange, Keyed
5	33114-010	2	Screw-HH
6	3255-8	2	Washer-Lock
7	99-2097	2	Detent
8	106-5335	2	Washer-Wave
9	32120-93	2	Ring-Retaining, EXT
10	99-2096	2	Screw-Adjuster, Bedbar
11	99-2098	2	Washer
12	99-3755	2	Spring-Compression
13	33025-00	2	Nut-Lock
14	105-5795	1	Plate-Side, LH
15	105-5774	4	Bolt-Shoulder
17	104-9447	1	Adapter-Motor
❶18		2	Bearing-Packed, Grease
18:1	93-2489	1	Bearing
19	105-5797	1	Plate-Side, RH
20	106-2633	2	Screw-HHF
21	106-6914	1	Ring-Snap, Internal
22	33024-00	2	Nut-Lock
23	105-5700	1	Washer-Wave
24	52-2890	2	Bushing-Nylon

Ref	Part No.	Qty.	Description
25	63-9510	2	Bushing
26	94-3559	2	Screw-HSH
27	253-134	2	Seal-Grease
30	106-2607	1	O-Ring
33	98-0668	4	Nut
34	106-2619	1	Strip-Seal
35	106-6926	2	Seal-Grease

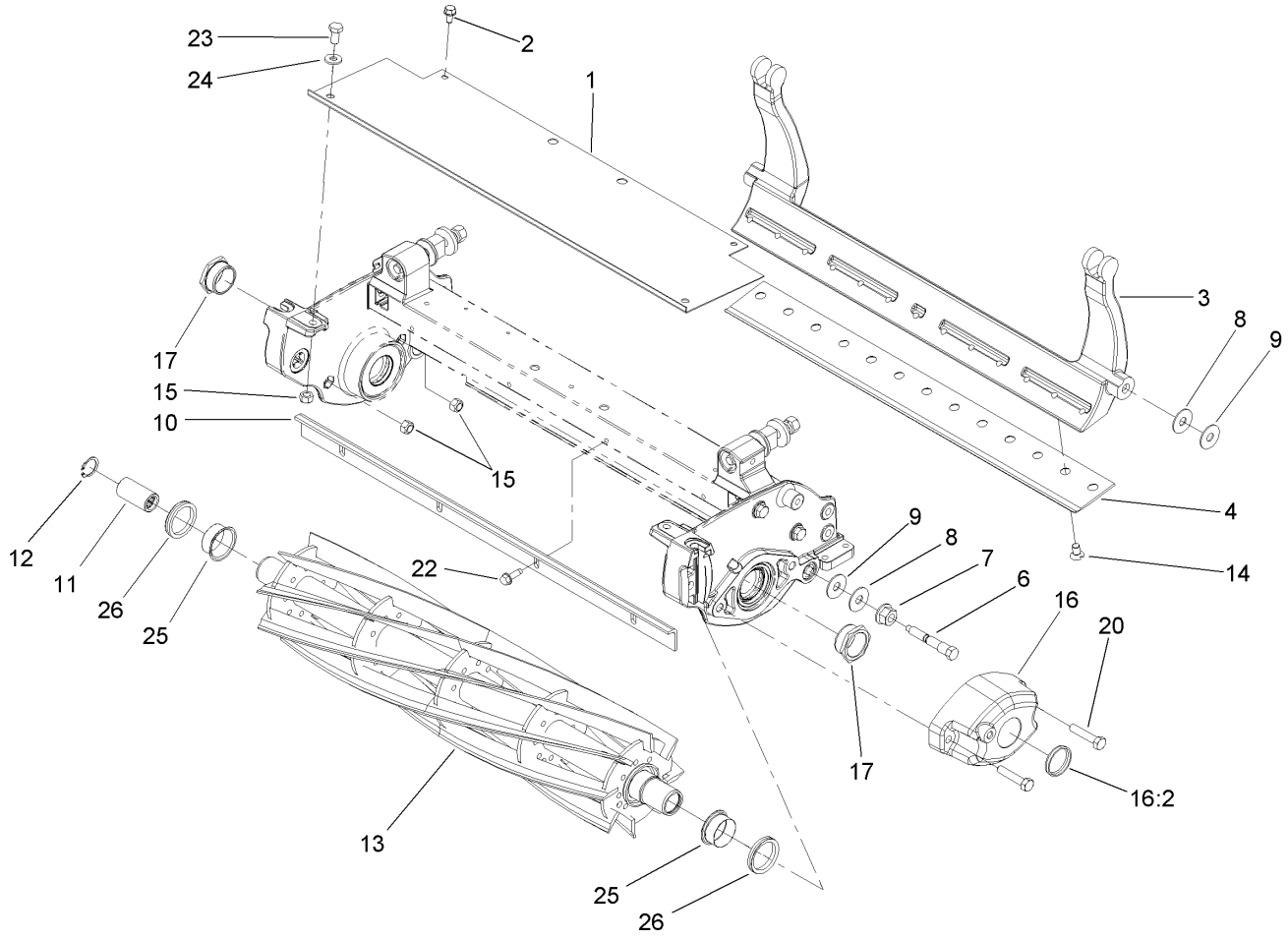

Blade Assembly

Ref	Part No.	Qty.	Description
1	106-2600-01	1	Shield-Grass
2	104-2628	2	Screw-HWH
3	106-2648-01	1	Bedbar
❷4	63-8600	1	Bedknife-Fairway
❷4	93-4262	1	Bedknife-Microcut
4	93-4263	1	Bedknife-Tournament Cut
❷4	93-4264	1	Bedknife-Low Cut
❷4	94-6392	1	Bedknife-Highcut
6	65-6270	2	Bolt-Bedbar
7	32128-48	2	Nut-HHF
8	52-2860	4	Washer
9	52-2900	4	Washer-Plastic
10	106-6924-03	1	Bar-Cutoff
11	94-4507	1	Coupler-Splined
12	105-5775	1	Ring-Retaining
13	105-5793	1	8 Blade Reel ASM
14	57-4910	13	Screw-Special
15	33024-00	4	Nut-Lock
16	105-5709	1	Weight ASM
16:2	105-5708	1	Plug-Expansion
17	105-5706	2	Nut-Lock, Bearing
20	33114-040	2	Screw-HH
22	110-3986	4	Screw
23	33114-016	2	Screw-HH

Ref	Part No.	Qty.	Description
24	3256-2	2	Washer-Flat
25	106-6927	2	Sleeve-Speedi
26	106-6929	2	V-Ring

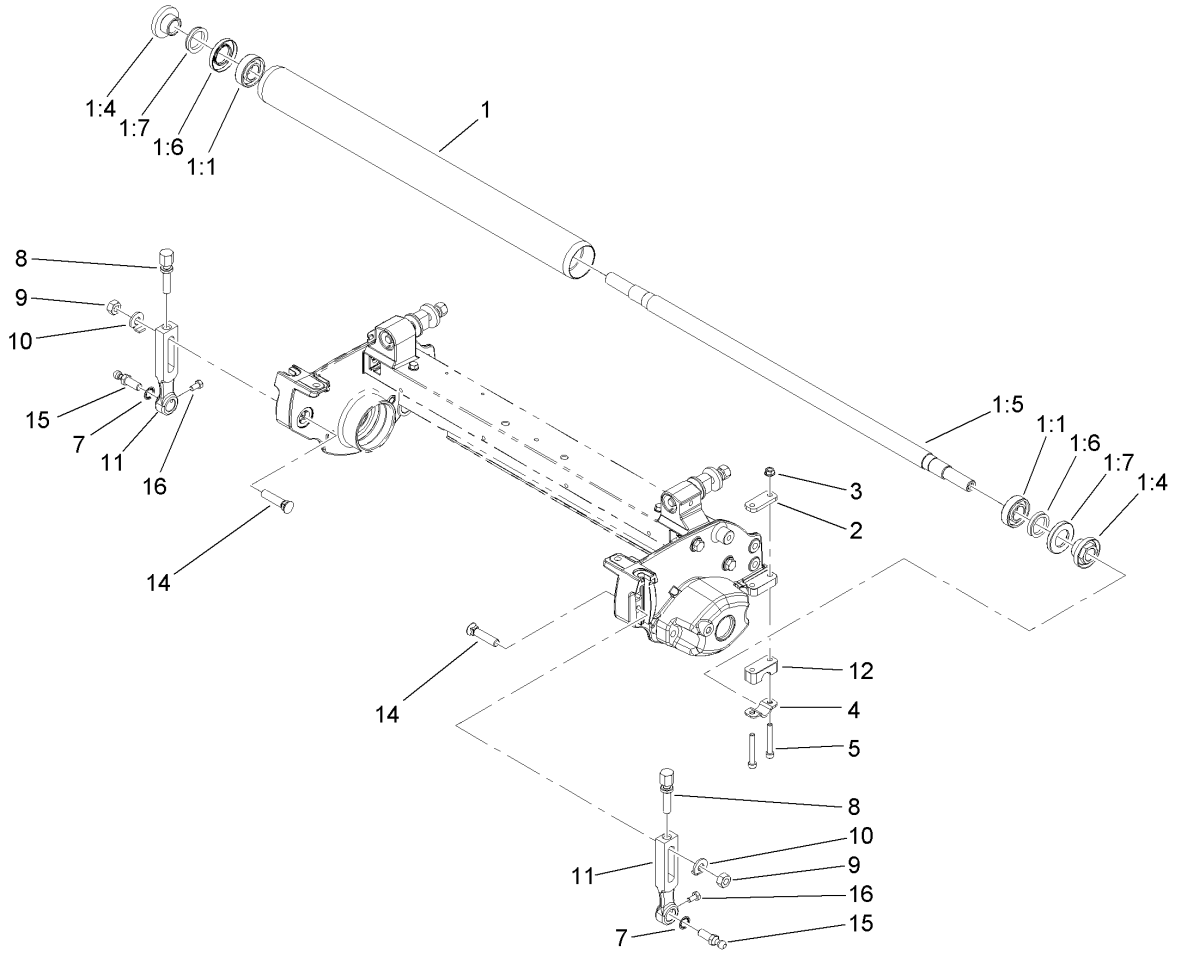

Rear Roller Assembly

Ref	Part No.	Qty.	Description
1	106-6945	1	Full Roller ASM
1:1	251-347	2	Bearing-Ball
1:4	106-6939	2	Nut-Lock, Bearing
1:5	106-6940	1	Shaft-Roller
1:6	106-6941	2	Seal
1:7	106-6942	2	V-Ring
2	105-5711	2	Shim-Roller
3	33003-00	4	Nut-HF
4	105-5712	2	Retainer-Shaft
5	106-2603	4	Screw-HSH
7	3254-6	2	Washer-Lock, Internal
8	110-7352	2	Screw-HOC
9	106-4668	2	Nut-Lock
10	104-2603	2	Washer-HOC
11	110-7351	2	Arm-HOC
12	105-5710	2	Spacer-Roller
14	105-5342	2	Bolt-Plow
15	94-2958	2	Stud-Ball
16	33113-012	2	Screw-HH

Attachments and Accessories

For 04610 - 8-Blade DPA Reel Mower, Greensmaster 3000 Series

Product Name	Model/Part
Wiehle Roller Kit	04424
Full Roller Kit	04625
Narrow Wiehle Roller Kit	04626
Wide Wiehle Roller Kit	04627
Steel Roller Kit	04628
DPA Reel Mower Groomer	04630
DPA Reel Mower Groomer	04631
DPA Reel Mower Rear Roller Brush	04640
DPA Reel Mower Rear Roller Brush	04641
DPA Reel Mower Rear Roller Scraper Kit	04646
Reel-5 Blade Heavy Duty ASM	106-2626
High Height-of-Cut Kit	106-4699
Shim	106-6923
Replacement Seal Kit	106-6937
Extended Grass Shield ASM	107-3503-01
Wiehle DPA Steel Roller ASM	107-3510
Brush Kit	107-8125
Reel-8 Blade Heavy Duty ASM	107-9522
Brush Kit for DPA Cutting Units	108-6450
Front Scraper Kit for Narrow Wiehle Roller	108-6468
Rear Roller Scraper Kit for DPA Cutting Units	108-6473
Front Scraper Kit for Wide Wiehle Roller	110-3961
Front Scraper Kit for Full Roller	110-3962
Front Brush Kit for Narrow Wiehle Roller	110-3963
Front Brush Kit for Wide Wiehle Roller	110-3964
Front Brush Kit for Full Roller	110-3965
Front Comb Kit for Narrow Wiehle Roller	110-3966
Front Comb Kit for Wide Wiehle Roller	110-3967
Front Comb Kit for Full Roller	110-3968
Bedknife-Fairway	63-8600
Bedknife-Microcut	93-4262
Bedknife-Tournament Cut	93-4263
Bedknife-Low Cut	93-4264
Bedknife-Highcut	94-6392

NOTES


TORO®