Form No. 3355–178 Rev A

Lift Alarm Kit

Pro Sweep 5200 Turf Sweeper

Part No. 110–7994

Installation Instructions

Loose Parts

Note: Use this chart as a checklist to ensure that all parts have been received. Without these parts, total setup cannot be completed.

Description	Qty.	Use
Proximity switch	2	
Block spacer	2	
Switch plate	1	
Screw, #10 x 1–1/2 inch	2	
Screw, #10 x 1–3/4 inch	2	
Flat washer, .216 x .500 inch	4	
Nut, #10	4	
Switch arm assembly	1	
Torsion spring	1	
Cam spacer	1	
Washer	1	
Screw, 5/16 x 2–3/4 inch	1	
Yoke spacer	1	
Flat washer, .375 x .734 inch	1	
Screw, 5/16 x 1–1/4 inch	1	
Indicator light	1	
Clamp	1	
Audio alarm	1	
Control box wire harness	1	
Trailer wire harness	1	
Cable tie	18	
Control box cover	1	
Decal, control box	1	
Decal, warning	1	
Installation Instructions Parts Catalog	1 1	
Operator Manual Addendum	1	Keep with Pro Sweep 5200 Turf Sweeper Operator Manual for reference

© 2006 by The Toro Company
8111 Lyndale Avenue South
Bloomington, MN 55420-1196

Contact us at www.Toro.com
All Rights Reserved
Printed in the USA

Installation

1. Place the sweeper on a level surface and apply the tow vehicle parking brake. Make sure the sweeper is in the operating (lowered) position.
2. Unplug the control box wire harness from the sweeper harness (Fig. 1). Do not unplug the power harness from the sweeper.

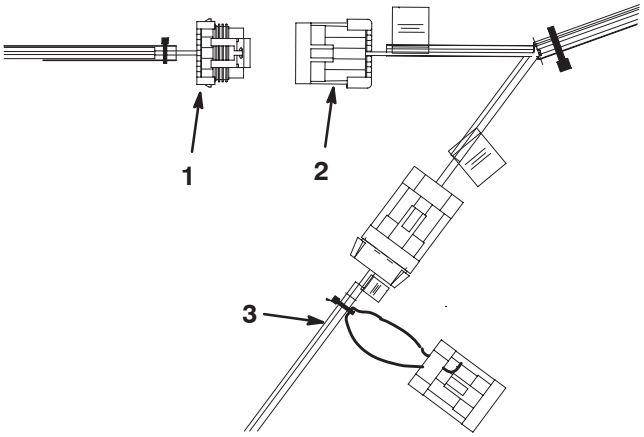

Figure 1

1. Control box wire harness
2. Sweeper harness
3. Power harness

3. On the right side of the sweeper, remove the screws, washers and nuts securing the proximity switch and the spacer block to the frame mounting bracket (Fig. 2).
4. Unplug the proximity switch harness connector from the sweepers main wire harness connector. Remove the switch.
5. Remove the capscrew securing the washers, cam spacer, and switch cam to the frame mounting bracket (Fig. 2).
6. Remove the capscrew securing the washer and the mounting pin spacer to the frame mounting bracket (Fig. 2). Discard all the removed components.

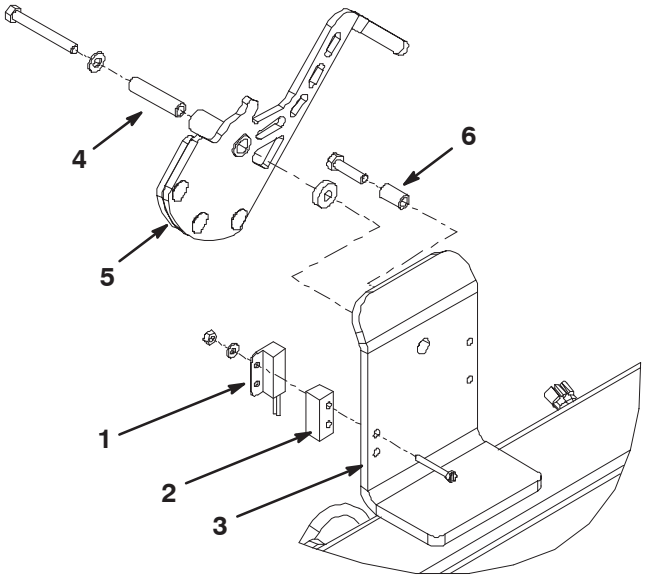

Figure 2

1. Proximity switch
2. Spacer block
3. Frame mounting bracket
4. Cam spacer
5. Switch cam
6. Mounting pin spacer

7. Loosely assemble a new switch and block spacer to the switch plate with (2) # 10 x 1–1/2 inch screws, .216 x .500 flat washers and # 10 nuts (Fig. 4). The screw heads are to be flush with the tops of the counter sunk holes in the switch plate.

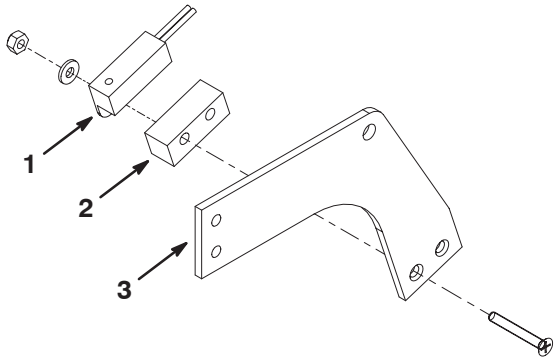

Figure 3

1. Switch
2. Spacer
3. Switch plate

8. Loosely assemble the switch plate assembly, block spacer and another switch to the frame mounting bracket with (2) # 10 x 1–1/2 inch screws, .216 x .500 flat washers and # 10 nuts (Fig. 4).

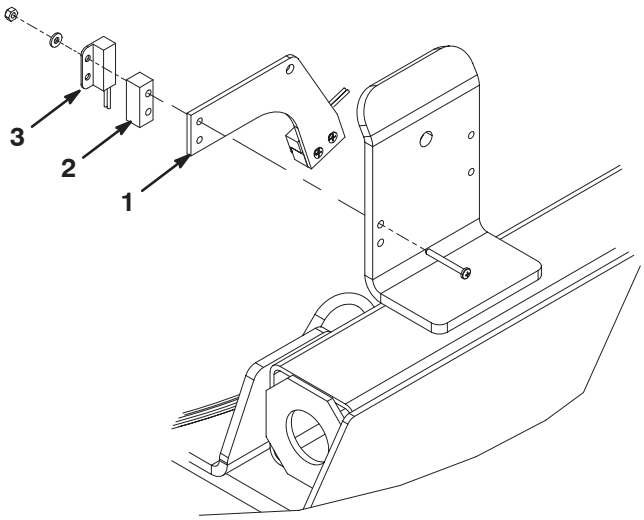

Figure 4

1. Switch plate assembly
2. Block spacer
3. Switch

9. Mount the switch arm assembly, torsion spring, cam spacer, washer and the upper left corner of the switch plate to the frame mounting bracket with a 5/16 x 2–3/4 inch screw (Fig. 5).

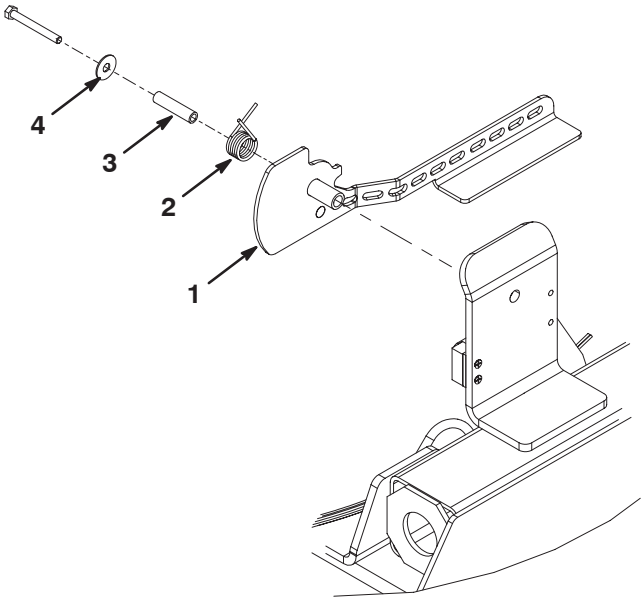

Figure 5

1. Switch arm assembly
2. Torsion spring
3. Cam spacer
4. Washer

10. Mount the yoke spacer and the .375 x .734 flat washer to the upper hole in the left side of the frame mounting bracket with a 5/16 x 1–1/4 inch screw (Fig. 6). The legs of the torsion spring are to be hooked on the yoke spacer and the post on the switch arm (Fig. 7).

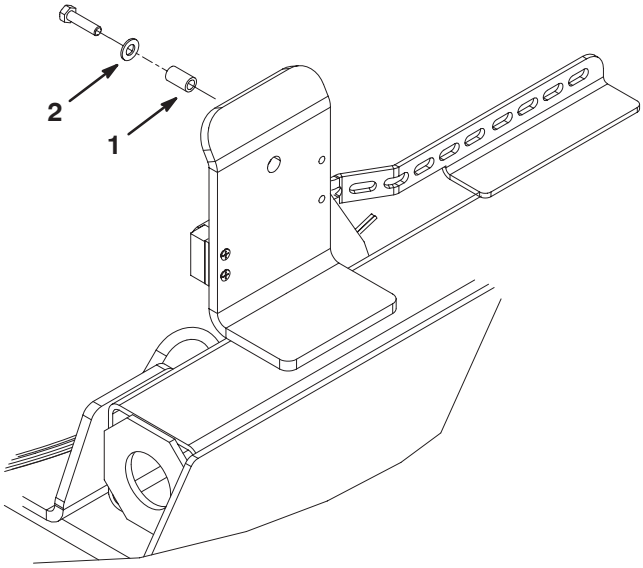

Figure 6

1. Yoke spacer
2. Washer

11. Adjust the switches so there is .065 inch clearance between them and the switch arm (Fig. 7). Tighten all fasteners.

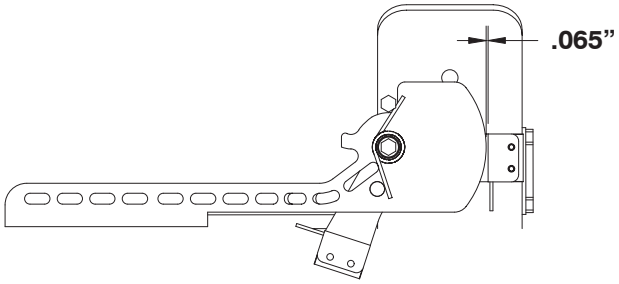

Figure 7

12. Loosen the (4) screws securing the cover to the remote control box (Fig. 8). Lift the cover off the box enough to unplug the switches from the internal connectors.

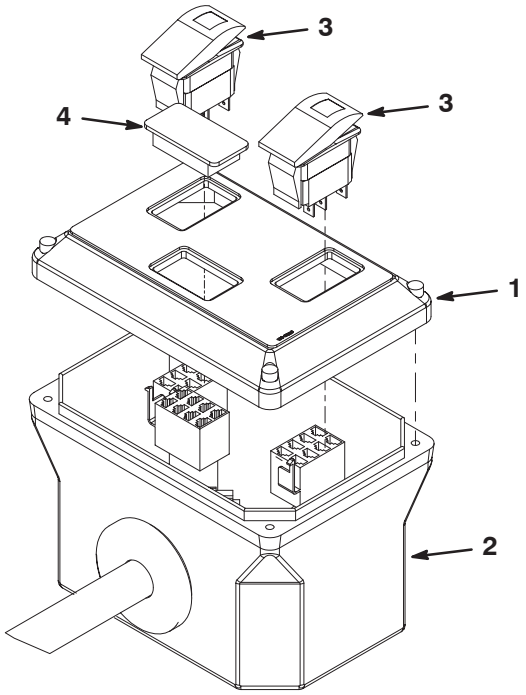

Figure 8

1. Cover
2. Remote control box
3. Switch (2)
4. Plug

13. Remove the switches and the plug from the cover (Fig. 8). Note the switch location for re–installation in the new cover. Discard the cover.

14. Affix the new control box decal to the new control box cover (Fig. 9).

15. Install the previously removed switches and plug into new cover (Fig. 9).

16. Insert the indicator light into the opening in the cover (Fig. 9). Place the clamp around the indicator light body to secure it to the cover (Fig. 9).

17. Loosen the strain relief clamp securing the control box wire harness to the inside of the control box.

18. Insert the two connector end of the new control box wire harness through the control box grommet and strain relief clamp and into the box (Fig. 9).

19. Connect one of the harness connectors to the audio alarm and position the alarm into the box (Fig. 9 & 10).

20. Connect the other harness connector to the indicator light (Fig. 9 & 10).

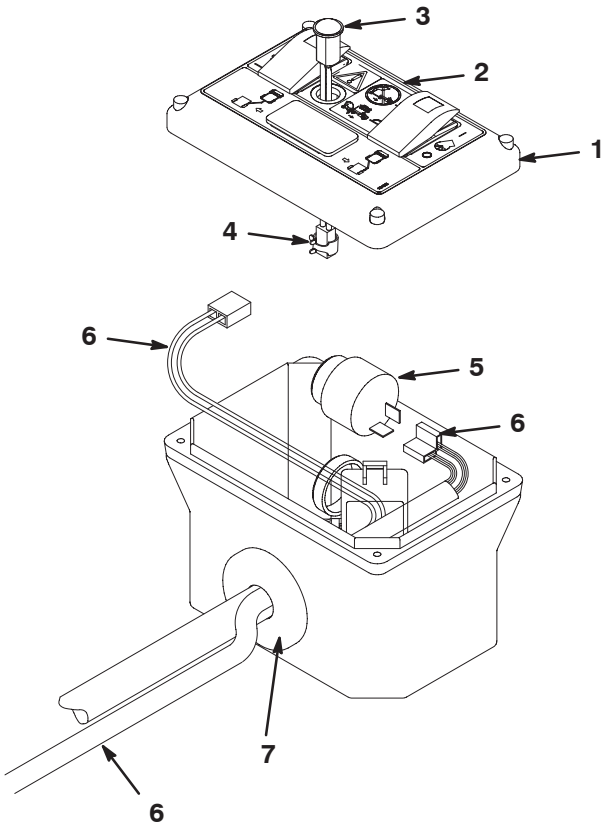

Figure 9

1. Control box cover
2. Decal
3. Indicator light
4. Clamp
5. Audio alarm
6. New control box harness
7. Grommet

21. Plug the cover switches into the connectors in the box.

22. Carefully pull any excess wire harness from the box and tighten the strain relief clamp.

23. Insert the cover onto the box and secure the screws.

24. Route the control box wire harness rearward along the existing control box wire harness. Secure the new harness to the existing harness with a cable tie approximately every foot.

25. Connect the new trailer harness to one of the proximity switches. Connect the other switch to the main wire harness connector (Fig. 10).

26. Route the trailer wire harness forward along the existing wire harness and through the guides. Secure the new harness to the existing harness with cable ties approximately every foot.

27. Connect the existing control box harness and trailer harness to the new trailer harness (Fig. 10). Secure the new and old trailer harness connectors together with a cable tie. They do not need to be disconnected when separating the sweeper from the tow vehicle.

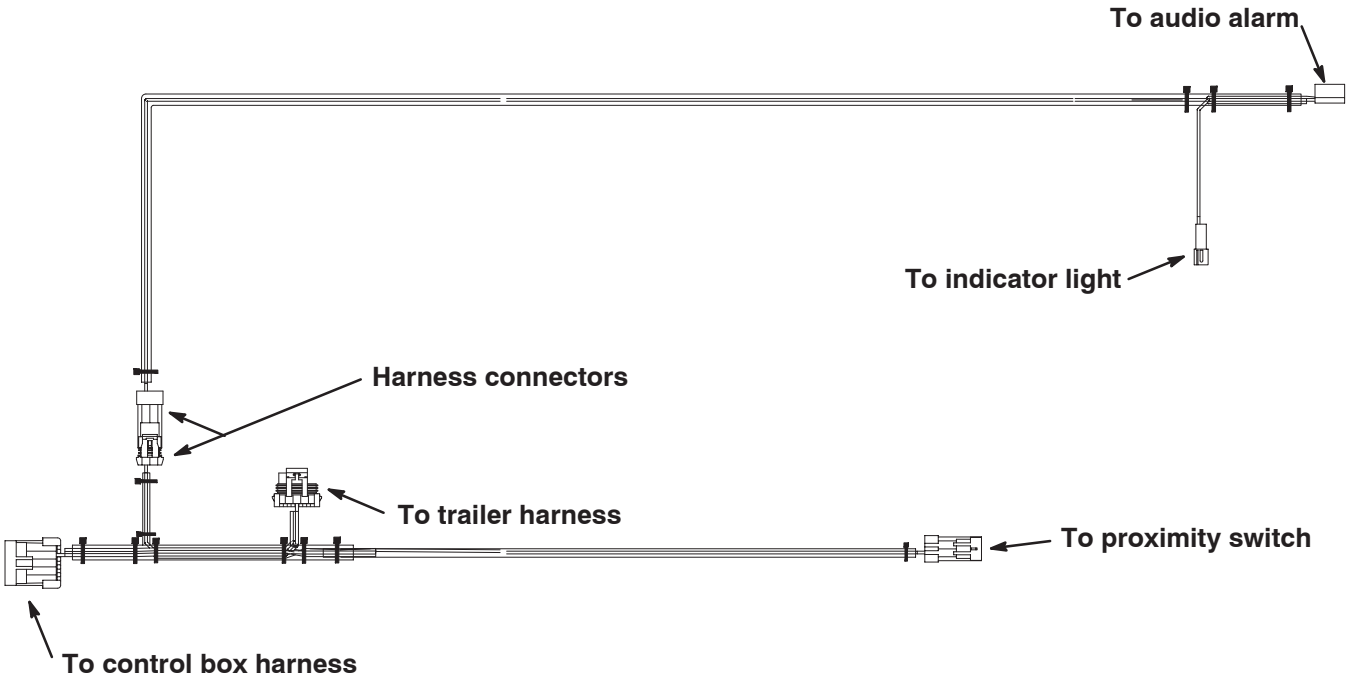

Figure 10

28. Using the dimensions shown in figure 11, locate and affix the new decal to the front right corner of the sweeper.

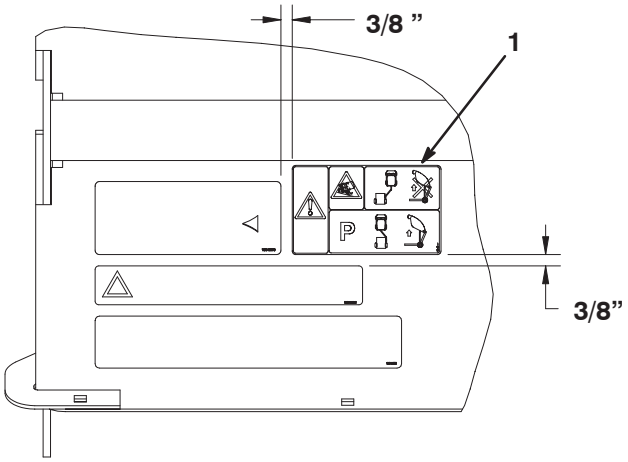

Figure 11

1. Decal


TORO®