Form Number 3319-636 Rev B

CCR™2400 Snowthrower

Model No. 38409 - 8900001 and up.
Model No. 38412 - 8900001 and up.

Parts Catalog

Ordering Replacement Parts
To order replacement parts, please supply the part number, the quantity, and the description of each part desired.

Understanding Reference Numbers
Each Identified part in an illustration has a reference number. The reference number for a part also appears in the parts list, along with other information about the part.

This catalog uses two special reference number formats, one to indicate parts in a service assembly and another to indicate the quantity of a given part in an illustration.

Service Assembly Reference Numbers
Parts in service assemblies have reference numbers in the form a:b. The a represents the reference number of the entire service assembly and the b represents a sequential number unique to each part within the service assembly.

For example, a wheel assembly might be identified by reference number 6, the tire by 6:1, the valve by 6:2, and the wheel by 6:3. When you order the assembly identified by reference number 6, you receive all parts identified by reference numbers 6:1, 6:2, and 6:3. However, you may also order any part individually. Reference numbers of this type appear in illustrations and in part lists.

Reference Numbers Indicating Quantity
In an illustration, if a reference number indicates more than one part, the reference number has the form nX y. The n represents the quantity of the part, the X is the multiplication symbol, and the y represents the reference number.

For example, in an illustration, the reference number 2X 37 means that two of the parts identified by reference number 37 are indicated.

© The Toro Company - 2006
All Rights Reserved

Register your product at www.Toro.com

Contents

Description	Page
Side Plate Scraper Assembly	3
Pulley and Cover Assembly	4
Discharge Chute Assembly	5
Rotor Assembly	6
Engine and Fuel Tank Assembly	7
Shroud Assembly	8
Handle Assembly	9
Cylinder, Piston, and Connecting Rod Assemblies Briggs and Stratton 084132-0120-E1	10
Muffler, Carburetor, and Intake Manifold Assemblies Briggs and Stratton 084132-0120-E1	11
Flywheel, Blower Housing, and Rewind Starter Assemblies Briggs and Stratton 084132-0120-E1	12

Part Description Abbreviations

Part descriptions in this catalog may include the following abbreviations.

AR	as required
ASM	assembly
BBC	blade brake clutch
CARR	carriage
DEG	degrees
EXT	external
FH	flat head
GA	gauge
HF	hex flange
HH	hex head
HHF	hex head flange
HHFTF	hex head flange thread forming
HJ	hex jam
HLH	hex lag head
HOC	height-of-cut
HSBH	hex socket button head
HSFH	hex socket flat head
HSH	hex socket head
HWH	hex washer head
HWHTF	hex washer head thread forming
HYD	hydraulic
INC	incorporated
LH	left hand
NI	nylon insert
NPTF	national pipe thread fine
PFH	phillips flat head
PPH	phillips pan head
PPHTF	phillips pan head thread forming
PRH	phillips round head
PTH	phillips truss head
PTO	power-take-off
RH	right hand
ROPS	roll-over-protection-system
SFH	slotted fillister head
SHH	slotted hex head
SHWH	slotted hex washer head
SPH	slotted pan head
SQH	square head
SRH	slotted round head
STD	standard
TAP	self tapping
TTH	torx truss head

Footnotes

❶ Not serviced separately

❷ Obtain from your local Briggs & Stratton dealer

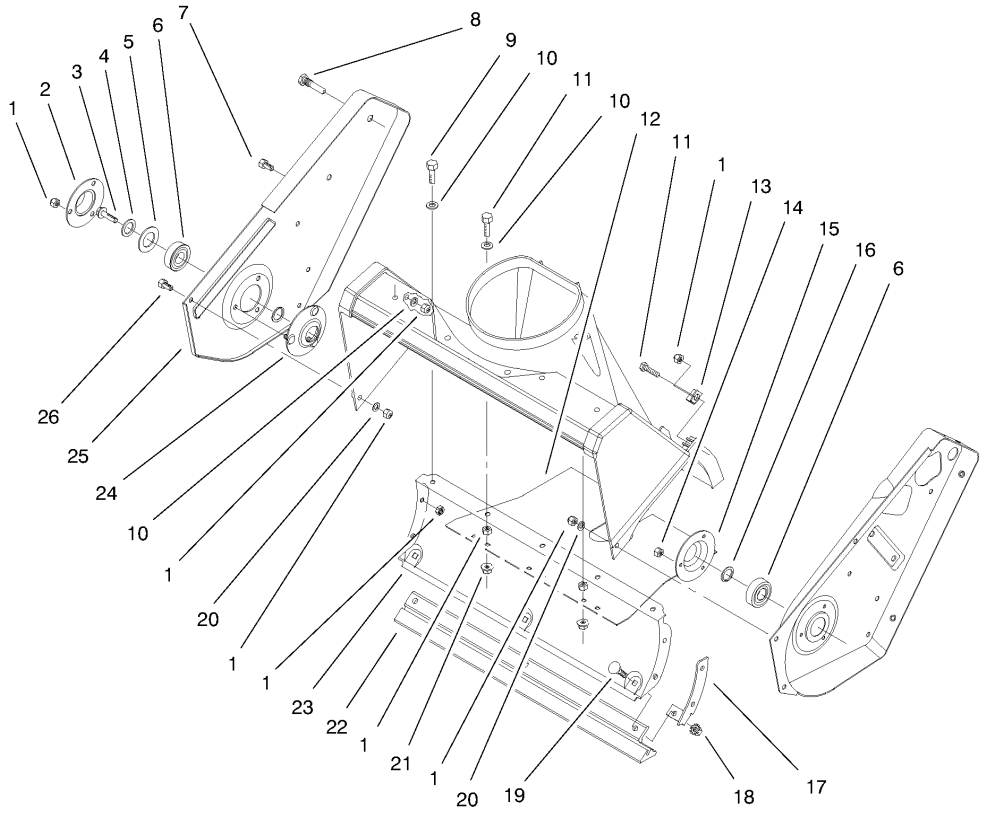

Side Plate Scraper Assembly

Ref	Part No.	Qty.	Description
1	3296-42	16	Nut-Lock, NI
2	52-7290	1	Trough
3	3234-25	1	Screw-HHF
4	3256-24	1	Washer-Flat
5	52-7270	1	Washer-Rubber
6	38-7820	2	Bearing-Ball
7	322-43	1	Screw-HH
8	38-8211	1	Pin-Rotor
9	321-4	3	Screw-HH
10	3256-22	7	Washer-Flat
11	321-6	3	Screw-HH
12	55-9512	1	Cover-Bottom
13	55-9430	1	Bracket-Housing
14	3296-2	3	Nut-Lock
15	38-8620	1	Flange-Bearing
16	52-7280	2	Washer-Thrust
17	56-2610	1	Bracket-Housing, Lower
18	32149-2	3	Nut-Keps
19	3229-11	3	Screw-CARR
20	3256-67	2	Washer-Flat
21	32128-10	2	Nut-Lock, HHF
22	55-8760	1	Scraper
23	55-9220-01	1	Wa-Housing
24	52-9110	1	Flange-Bearing

Ref	Part No.	Qty.	Description
25	55-8840-01	1	Sideplate-RH
26	32105-15	5	Screw

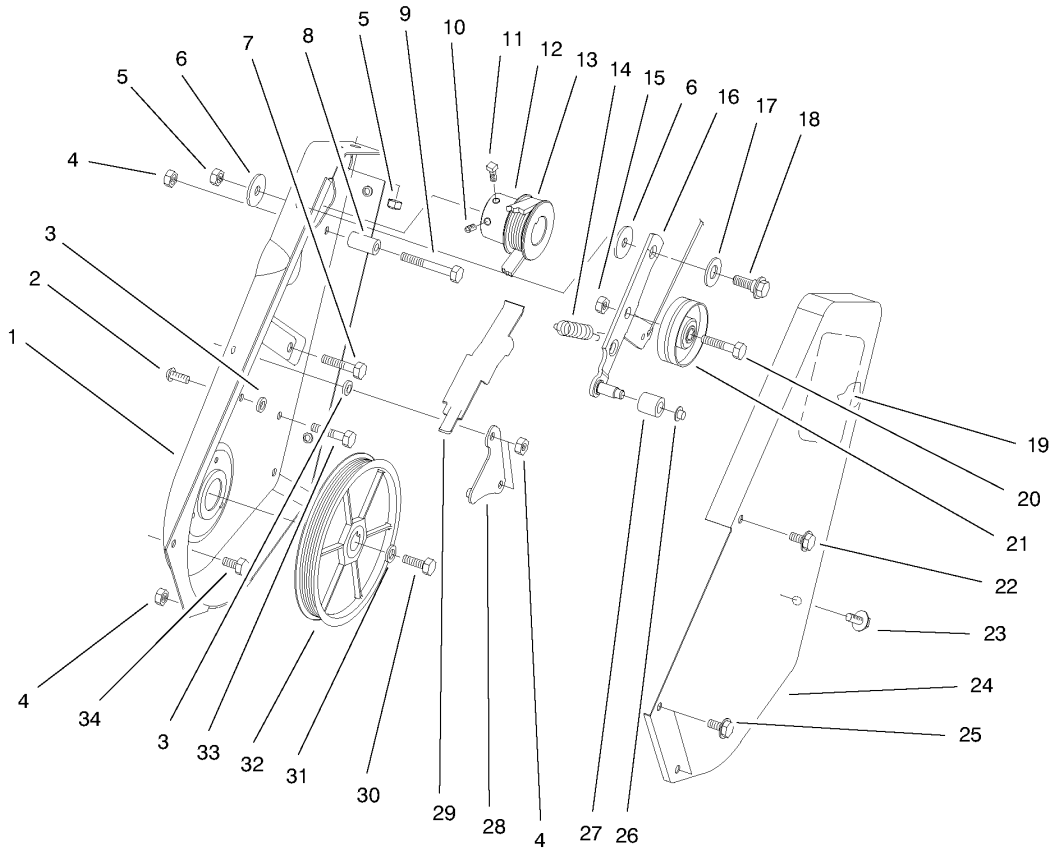

Pulley and Cover Assembly

Ref	Part No.	Qty.	Description
1	55-8851-01	1	Sideplate-LH
2	3274-31	1	Screw-HSBH
3	55-9620	2	Spacer-Plate, Pivot
4	3296-42	5	Nut-Lock, NI
5	3296-29	3	Nut-Lock, NI
6	5-4460	2	Washer-Pivot
7	322-3	2	Screw-HH
8	55-9530	1	Sleeve-Guide, Belt
9	321-13	1	Screw-HH
10	3245-41	1	Screw-HSH
11	3241-7	1	Screw-SQH
12	55-9180	1	Engine Pulley
13	55-9300	1	Belt - Drive
14	55-9280	1	Spring-Extension
15	32152-2	1	Nut-Lock, Cone
16	63-3610	1	Idler Arm ASM
17	25-5640	1	Washer
18	27-0410	1	Screw-Shoulder
19	60-9480	1	Decal
20	323-29	1	Screw-HH
21	55-9290	1	Pulley-Idler
22	36-3860	1	Screw-HWH, TAP
23	12-3270	2	Screw
24	55-9010-01	1	Cover-Drive

Ref	Part No.	Qty.	Description
25	32105-15	2	Screw
26	32112-11	1	Nut-Push
27	55-9520	1	Roller-Brake
28	55-9570	1	Pivot Plate ASM
29	55-9550	1	Brake-Arm
30	321-30	1	Screw-HH
31	3290-456	1	Washer-Belleville
32	60-9320	1	Rotor Pulley Asy
33	321-4	2	Screw-HH
34	32105-8	3	Screw-SHH
35	95-1904	1	Decal-Hot
36	94-2561	1	Decal-Hot

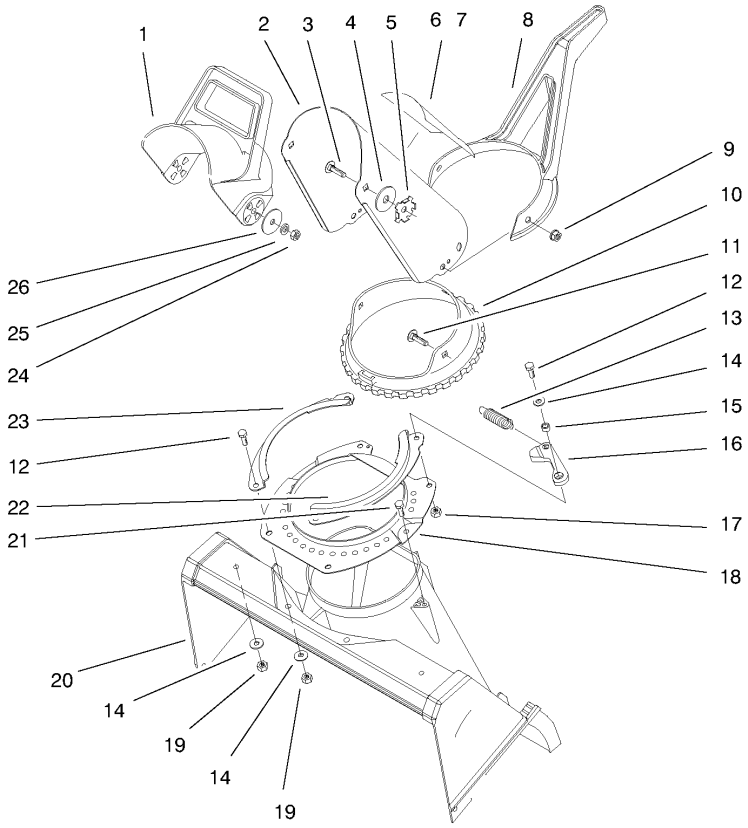

Discharge Chute Assembly

Ref	Part No.	Qty.	Description
1	56-2680	1	Chute-Deflector
2	94-2790	1	Chute ASM W/Decal
2	94-2791	1	Chute ASM W/Decal
3	3230-22	2	Screw-CARR
4	20-4320	2	Washer-Rubber
5	55-8950	2	Plate-Friction
6	94-2900	1	Decal - Danger Discharge
7	94-2901	1	Decal-Danger
8	94-9914	1	Handle-Control, Chute
9	32149-1	3	Nut-Keps
10	71-4950	1	Gear Ring, Chute
11	3230-23	3	Screw-CARR
12	321-4	4	Screw-HH
13	80-4600	1	Spring-Extension
14	3256-22	5	Washer-Flat
15	55-9370	1	Spacer-Blade, Rotor
16	80-4610	1	Detent
17	3296-56	1	Nut-Lock, NI
18	55-8921	1	Ring-Chute Support
19	3296-42	5	Nut-Lock, NI
20	55-8700	1	Housing
21	46-8092	2	Screw-Plastite
22	71-4980	1	Retainer-Chute Ring
23	71-4990	1	Retainer-Chute Ring

Ref	Part No.	Qty.	Description
24	3296-29	2	Nut-Lock, NI
25	3290-456	2	Washer-Belleville
26	3256-68	2	Washer-Flat

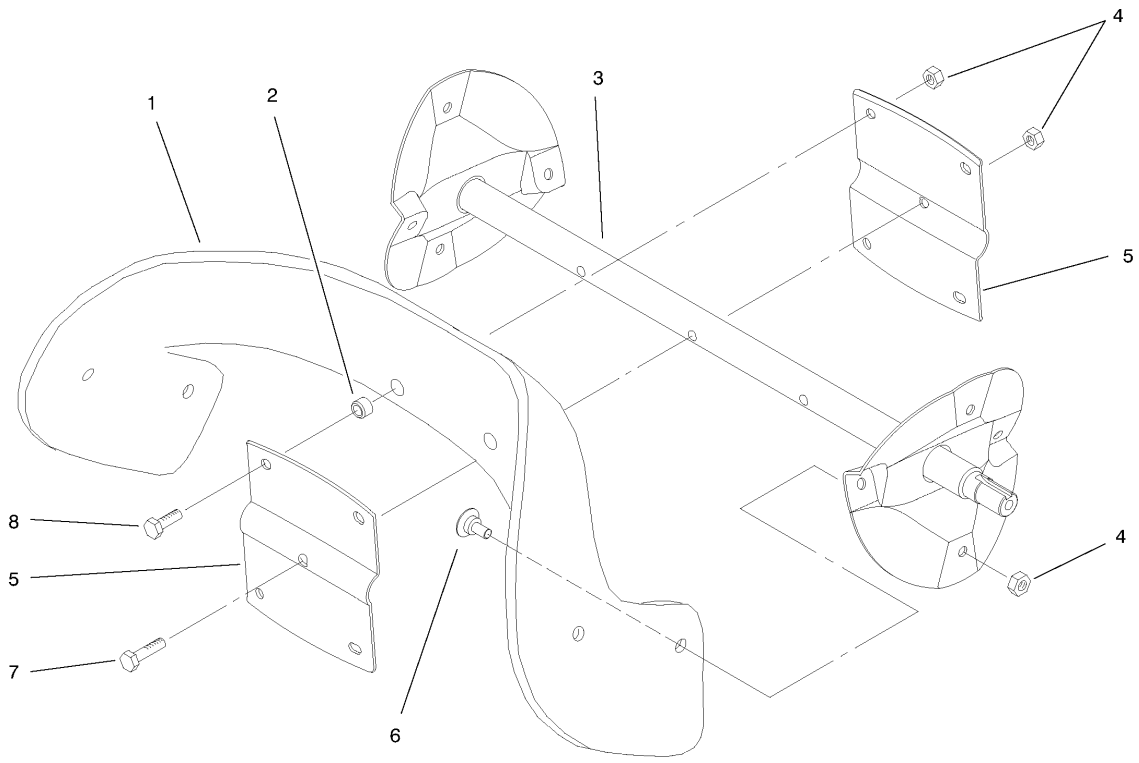

Rotor Assembly

Ref	Part No.	Qty.	Description
1	88-0771	2	Blade-Rotor
2	55-9370	4	Spacer-Blade, Rotor
3	55-9202-01	1	Rotor
4	3296-56	12	Nut-Lock, NI
5	66-6600-01	2	Rotor
6	84-1971	8	Screw
7	321-8	1	Screw-HH
8	321-4	4	Screw-HH

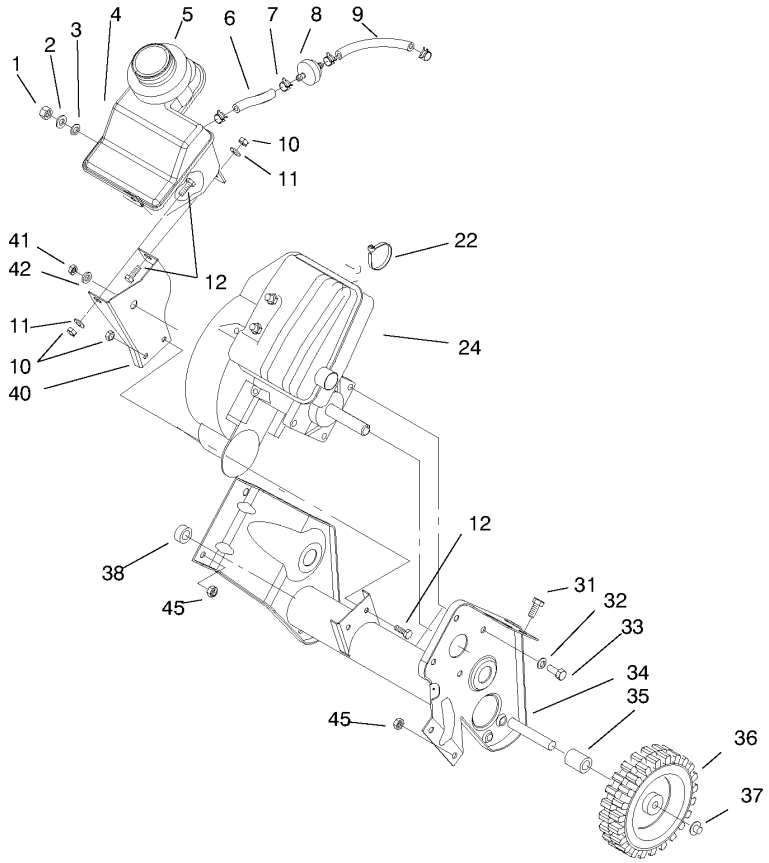

Engine and Fuel Tank Assembly

Ref	Part No.	Qty.	Description
1	32152-8	1	Nut-Lock, Cone
2	3256-23	1	Washer-Flat
3	237-89	1	Grommet-Rubber
4	94-9920	1	Tank-Gas
5	55-9310	1	Seal-Foam
6	49-2482	1	Line-Fuel
7	2412-98	4	Clamp
8	56-6360	1	Filter-Fuel
9	94-9932	1	Hose-Fuel
10	3296-42	4	Nut-Lock, NI
11	3256-22	2	Washer-Flat
12	321-4	4	Screw-HH
22	250-4	1	Tie-Cable
❶❷24		1	Engine-Briggs And Stratton 084132-0120-E1
31	322-3	2	Screw-HH
32	3290-456	5	Washer-Belleville
33	322-3	4	Screw-HH
34	95-1892	1	Frame
35	66-6501	1	Spacer-Wheel
36	66-6510	2	Wheel
37	32112-14	2	Nut-Push
38	66-6500	1	Spacer-Wheel
40	94-9918	1	Support-Recoil

Ref	Part No.	Qty.	Description
41	3296-16	1	Nut-Lock, NI
42	71-5320	1	Washer-Support, Engine
45	3296-29	3	Nut-Lock, NI

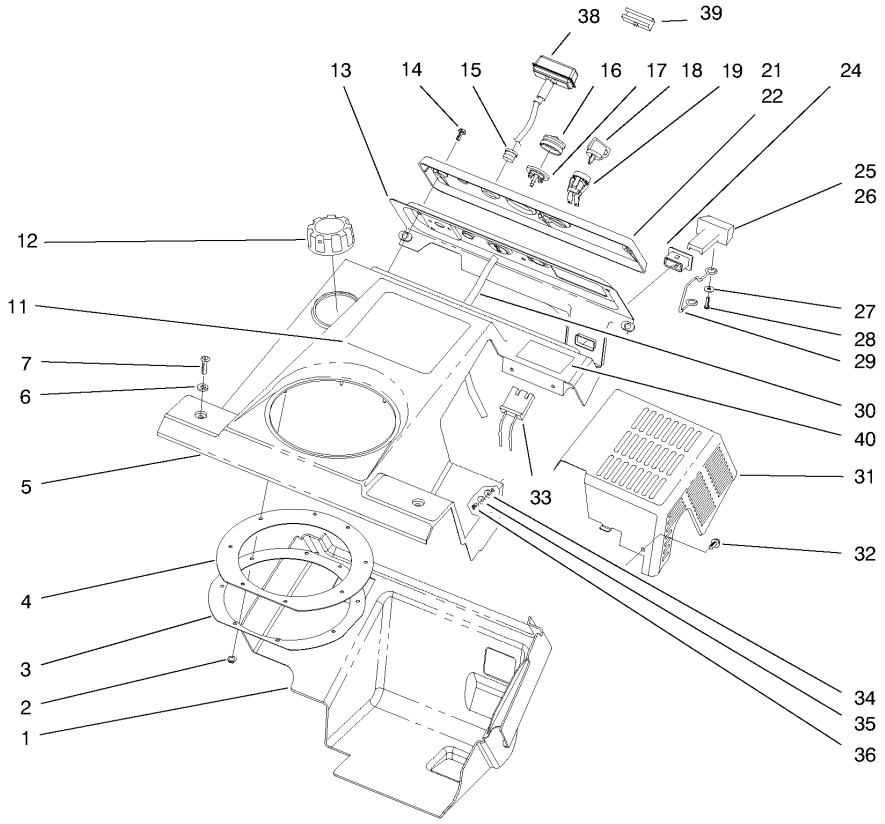

Shroud Assembly

Ref	Part No.	Qty.	Description
1	94-9919	1	Shroud - Lower
2	3290-474	8	Palnut
3	55-9540-01	1	Chute Seal Retainer *red
4	55-9260	1	Seal-Chute
5	94-9925	1	Shroud - Upper
6	3256-22	2	Washer-Flat
7	3250-32	2	Screw-PPH
11	98-1355	1	Decal - Ccr 2400 Gts
12	55-3573	1	Cap-Fuel ASM
13	55-9490-01	1	Wa-Panel
14	32144-112	3	Screw-HWH
15	55-9410	1	Guide-Rope, Starter
16	66-7460	1	Bulb-Primer
17	44-2750	1	Body-Primer
18	63-8360	1	Key-Ignition
19	40-5940	1	Switch
21	55-9350	1	Control Nameplate
22	94-2570	1	Nameplate-Control
24	55-8820	1	Fitting
25	55-8811	1	Choke Control
26	55-8810	1	Control-Choke
27	3256-49	1	Washer-Flat
28	32144-111	1	Screw-PPH
29	95-7439	1	Linkage-Choke

Ref	Part No.	Qty.	Description
30	98-1372	1	Hose-Primer
31	94-9924	1	Shield-Heat
32	32105-8	3	Screw-SHH
33	218-532	1	Connector-Body
34	55-9660	3	Washer
35	3256-14	3	Washer-Flat
36	3296-12	3	Nut-Lock
38	612825	1	Handle-Start
39	612824	1	Clip-Starter
40	98-1373	1	Decal

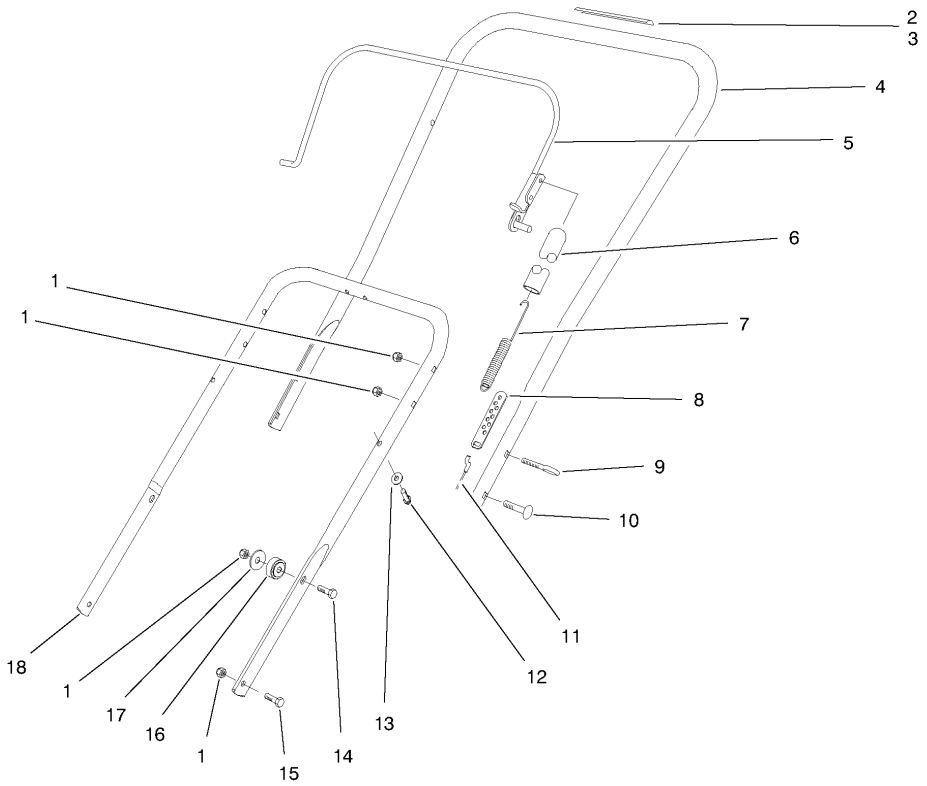

Handle Assembly

Ref	Part No.	Qty.	Description
1	3296-29	8	Nut-Lock, NI
2	66-6870	1	Decal - Rotor Drive
3	94-2577	1	Decal-Rotor Drive
4	95-2667	1	Handle-Upper
4	95-2668	1	Handle-Upper W/Decal
5	71-5120-01	1	Bail
6	71-5530	1	Cover-Spring
7	71-5480	1	Spring-Clutch
8	55-9380	1	Adjuster-Cable
9	55-9420	1	Bolt-Eye
10	17-9424	3	Screw
11	94-9922	1	Cable-Clutch
12	61-8640	2	Screw
13	3-7501	2	Washer
14	322-17	2	Screw-HH
15	322-3	2	Screw-HH
16	94-9923	2	Spacer - Lower Handle
17	3256-68	2	Washer-Flat
18	55-9121-01	1	Handle-Lower

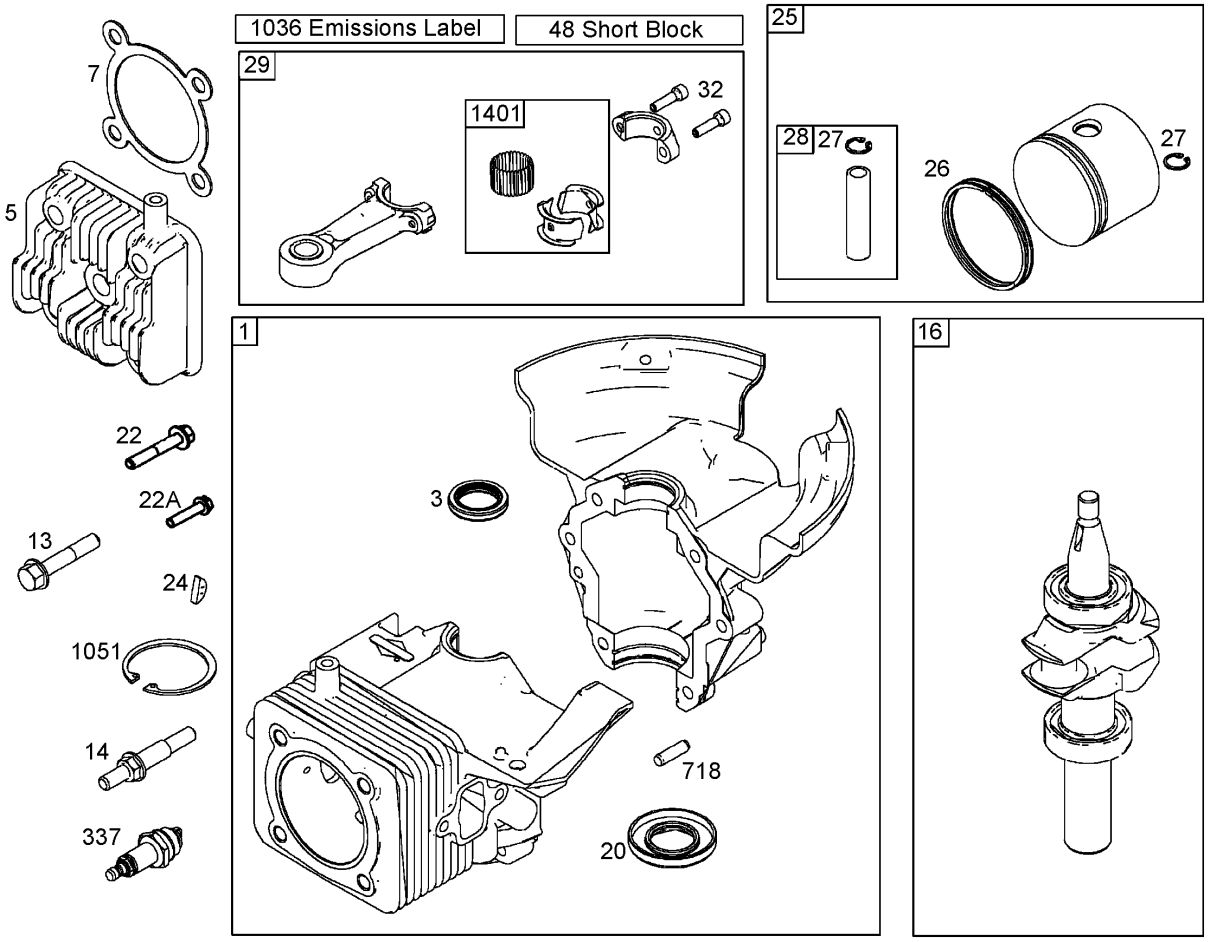

Cylinder, Piston, and Connecting Rod Assemblies
Briggs and Stratton 084132-0120-E1

Ref	Part No.	Qty.	Description
❷1	801260	1	Cylinder ASM
❷3	801262	1	Seal-Oil
❷5	801283	1	Head-Cylinder
❷7	801263	1	Gasket-Head, Cylinder
❷13	801264	1	Screw (Cylinder Head)
❷14	801265	1	Stud (Cylinder Head)
❷16	801220	1	Crankshaft
❷20	801261	1	Seal-Oil
❷22	801266	1	Screw (Crankcase Cover And Sump)
❷22A	801271	1	Screw (Crankcase Cover And Sump)
❷24	801234	1	Key-Flywheel
❷25	801279	1	Piston ASM
❷26	801280	1	Ring Set
❷27	801275	1	Lock-Pin, Piston
❷28	801276	1	Pin-Piston
❷29	801277	1	Rod-Connecting
❷32	801278	1	Screw
❷48	801284	1	Short Block
❷337	801254	1	Plug-Spark
❷718	690959	1	Pin-Locating
❷1051	801274	1	Ring-Retaining
❷1036	801294	1	Label-Emissions

Ref	Part No.	Qty.	Description
❷1401	801290	1	Roller-Strip

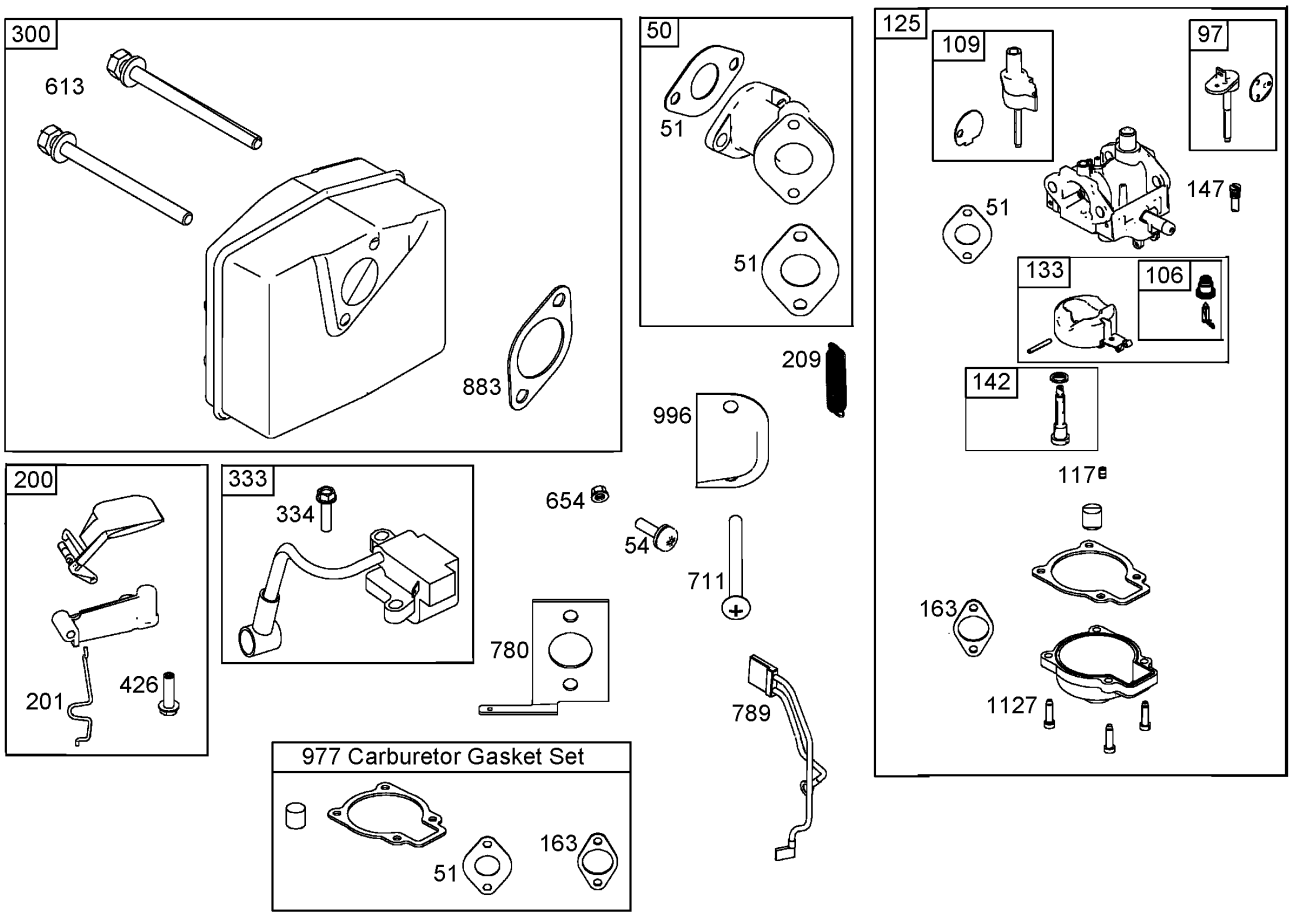

Muffler, Carburetor, and Intake Manifold Assemblies
Briggs and Stratton 084132-0120-E1

Ref	Part No.	Qty.	Description
❷50	801232	1	Manifold-Intake
❷51	801224	1	Gasket-Intake
❷54	801230	1	Screw (Intake Manifold)
❷97	801306	1	Shaft-Throttle
❷106	801317	1	Seat-Inlet
❷109	801307	1	Shaft-Choke
❷117	801310	1	Jet-Main
❷125	801233	1	Carburetor
❷133	801316	1	Float-Carburetor
❷142	801313	1	Nozzle-Carburetor
❷147	801308	1	Jet-Pilot
❷163	801227	1	Gasket-Cleaner, Air
❷200	801289	1	Blade-Governor
❷201	801225	1	Link-Vane, Air
❷209	801223	1	Spring-Governor
❷300	801250	1	Muffler
❷333	801268	1	Armature-Magneto
❷334	801267	1	Screw
❷426	801231	1	Screw
❷613	801251	1	Screw
❷654	801324	1	Nut (Intake Manifold) (Used Before Engine Code Date 05042600)
❷711	801229	1	Screw

Ref	Part No.	Qty.	Description
❷780	801228	1	Anchor-Spring
❷789	801253	1	Wire ASM
❷883	801252	1	Gasket-Exhaust
❷977	801312	1	Gasket Set-Carburetor
❷996	801226	1	Shield-Carburetor
❷1127	801318	1	Screw

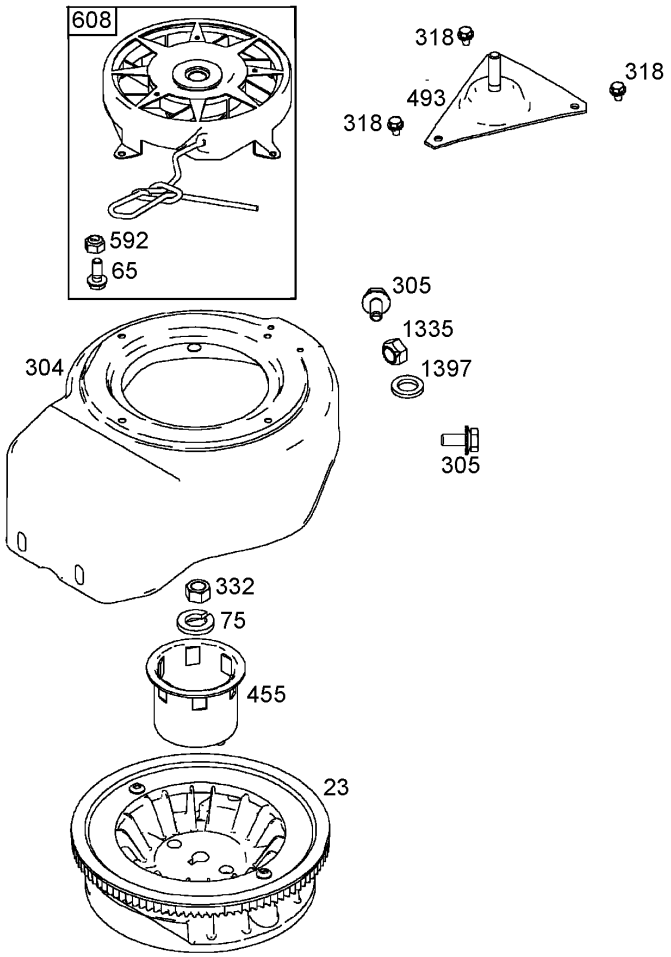

Flywheel, Blower Housing, and Rewind Starter Assemblies
Briggs and Stratton 084132-0120-E1

Ref	Part No.	Qty.	Description
❷23	801246	1	Flywheel
❷65	801243	1	Screw
❷75	801237	1	Washer
❷304	801257	1	Housing-Blower
❷305	801239	1	Screw
❷318	801241	1	Screw
❷332	801238	1	Nut
❷455	801235	1	Cup-Flywheel
❷493	801240	1	Bracket-Mounting
❷592	801244	1	Nut
❷608	801242	1	Starter-Rewind
❷1335	801269	1	Nut
❷1397	801270	1	Washer

NOTES

NOTES

NOTES


TORO®