Form Number 3354-769 Rev B

CCR™ 2400 Snowthrower

Model No. 38414 - 9900001 and up.

Parts Catalog

Ordering Replacement Parts

To order replacement parts, please supply the part number, the quantity, and the description of each part desired.

Understanding Reference Numbers

Each Identified part in an illustration has a reference number. The reference number for a part also appears in the parts list, along with other information about the part.

This catalog uses two special reference number formats, one to indicate parts in a service assembly and another to indicate the quantity of a given part in an illustration.

Service Assembly Reference Numbers

Parts in service assemblies have reference numbers in the form a:b. The a represents the reference number of the entire service assembly and the b represents a sequential number unique to each part within the service assembly.

For example, a wheel assembly might be identified by reference number 6, the tire by 6:1, the valve by 6:2, and the wheel by 6:3. When you order the assembly identified by reference number 6, you receive all parts identified by reference numbers 6:1, 6:2, and 6:3. However, you may also order any part individually. Reference numbers of this type appear in illustrations and in part lists.

Reference Numbers Indicating Quantity

In an illustration, if a reference number indicates more than one part, the reference number has the form nX y. The n represents the quantity of the part, the X is the multiplication symbol, and the y represents the reference number.

For example, in an illustration, the reference number 2X 37 means that two of the parts identified by reference number 37 are indicated.

© The Toro Company - 2006
All Rights Reserved

Register your product at www.Toro.com

Contents

Description	Page
Auger Housing Assembly	3
Side Plate and Idler Assembly	4
Deflector and Discharge Assembly	5
Rotor Assembly	6
Engine and Gas Tank Assembly	7
Shroud Assembly	8
Handle Assembly	9
Cylinder, Piston, and Connecting Rod Assemblies Briggs and Stratton 084133-0196-E1	10
Muffler, Carburetor, and Intake Manifold Assemblies Briggs and Stratton 084133-0196-E1	11
Flywheel, Blower Housing, and Starter Assemblies Briggs and Stratton 084133-0196-E1	12

Part Description Abbreviations

Part descriptions in this catalog may include the following abbreviations.

AR	as required
ASM	assembly
BBC	blade brake clutch
CARR	carriage
DEG	degrees
EXT	external
FH	flat head
GA	gauge
HF	hex flange
HH	hex head
HHF	hex head flange
HHFTF	hex head flange thread forming
HJ	hex jam
HLH	hex lag head
HOC	height-of-cut
HSBH	hex socket button head
HSFH	hex socket flat head
HSH	hex socket head
HWH	hex washer head
HWHTF	hex washer head thread forming
HYD	hydraulic
INC	incorporated
LH	left hand
NI	nylon insert
NPTF	national pipe thread fine
PFH	phillips flat head
PPH	phillips pan head
PPHTF	phillips pan head thread forming
PRH	phillips round head
PTH	phillips truss head
PTO	power-take-off
RH	right hand
ROPS	roll-over-protection-system
SFH	slotted fillister head
SHH	slotted hex head
SHWH	slotted hex washer head
SPH	slotted pan head
SQH	square head
SRH	slotted round head
STD	standard
TAP	self tapping
TTH	torx truss head

Footnotes

❶ Obtain from your local Briggs & Stratton dealer

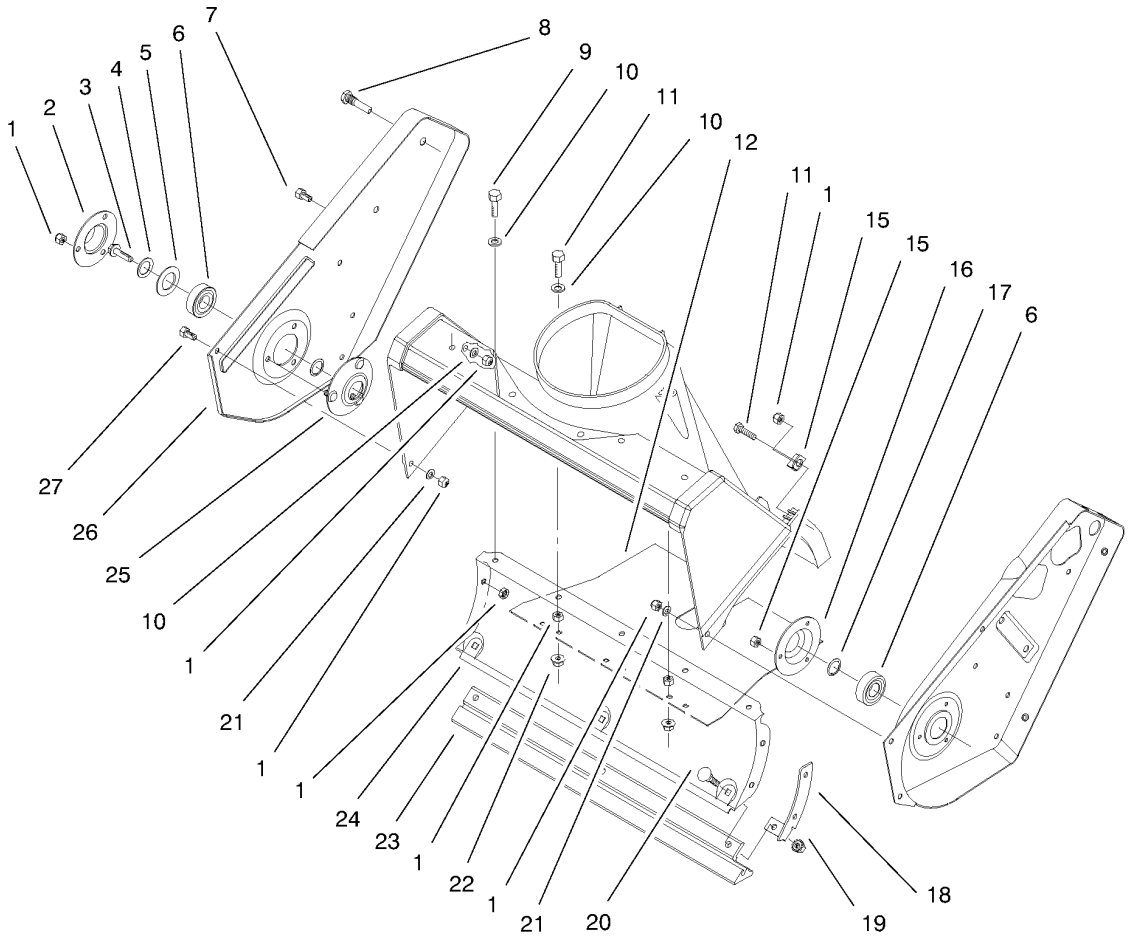

Auger Housing Assembly

Ref	Part No.	Qty.	Description
1	3296-42	16	Nut-Lock, NI
2	52-7290-03	1	Retainer-Bearing
3	3234-25	1	Screw-HHF
4	3256-24	1	Washer-Flat
5	52-7270	1	Washer-Rubber
6	38-7820	2	Bearing-Ball
7	322-43	1	Screw-HH
8	38-8211	1	Pin-Rotor
9	321-4	3	Screw-HH
10	3256-22	7	Washer-Flat
11	321-6	3	Screw-HH
12	55-9512	1	Cover-Bottom
14	55-9430	1	Bracket-Housing
15	3296-2	3	Nut-Lock
16	38-8620	1	Flange-Bearing
17	52-7280	2	Washer-Thrust
18	56-2610	1	Bracket-Housing, Lower
19	32149-2	3	Nut-Keps
20	3229-11	3	Screw-CARR
21	3256-67	2	Washer-Flat
22	32128-10	2	Nut-Lock, HHF
23	55-8760	1	Scraper
24	55-9220-03	1	Housing-Lower
25	52-9110	1	Flange-Bearing

Ref	Part No.	Qty.	Description
26	55-8840-03	1	Plate-Side, RH
27	32105-15	5	Screw

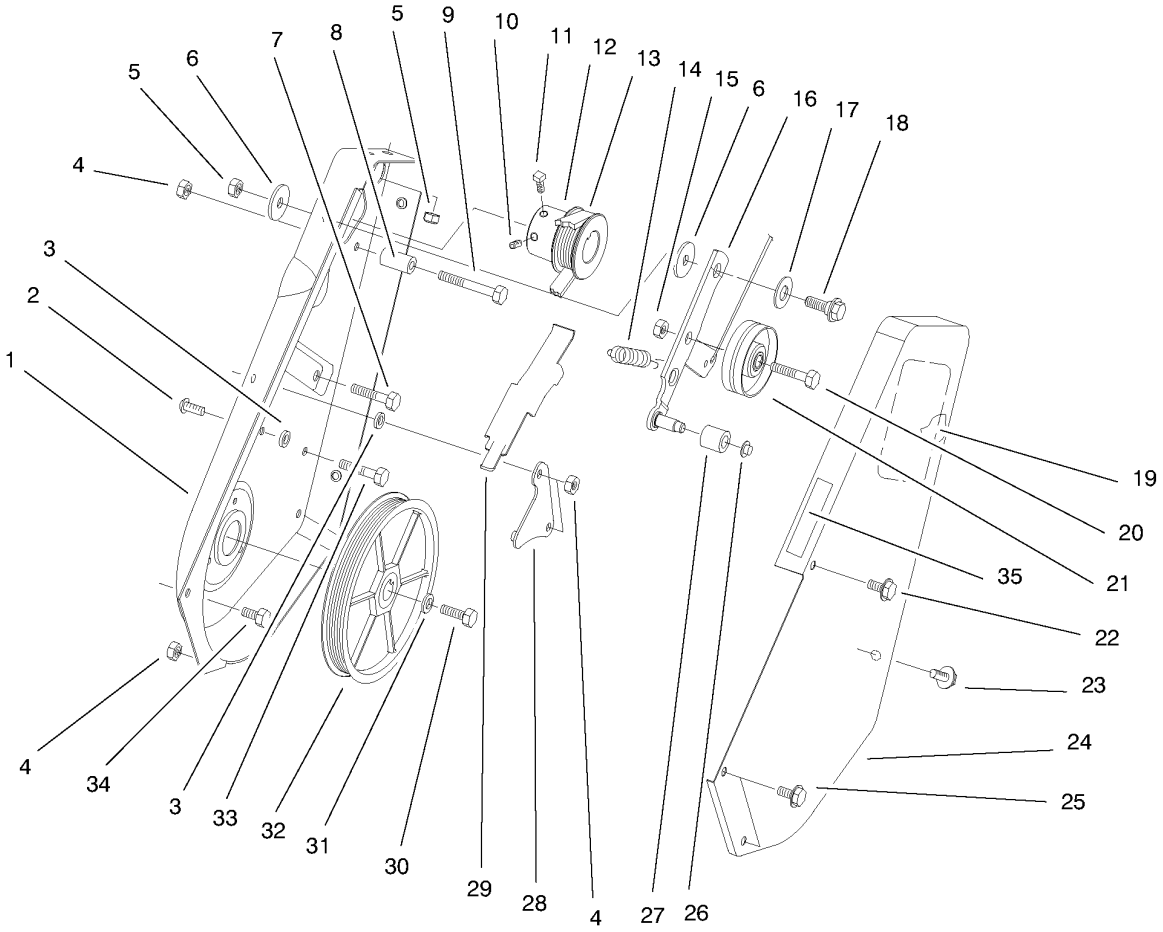

Side Plate and Idler Assembly

Ref	Part No.	Qty.	Description
1	55-8851-03	1	Plate-Side, LH
2	3274-31	1	Screw-HSBH
3	55-9620	2	Spacer-Plate, Pivot
4	3296-42	5	Nut-Lock, NI
5	3296-29	3	Nut-Lock, NI
6	5-4460	2	Washer-Pivot
7	322-3	2	Screw-HH
8	55-9530	1	Sleeve-Guide, Belt
9	321-13	1	Screw-HH
10	3245-41	1	Screw-HSH
11	3241-7	1	Screw-SQH
12	95-2673	1	Pulley-Engine
13	95-6151	1	Belt-Drive
14	55-9280	1	Spring-Extension
15	32152-2	1	Nut-Lock, Cone
16	63-3610	1	Idler Arm ASM
17	25-5640	1	Washer
18	27-0410	1	Screw-Shoulder
19	60-9480	1	Decal
20	323-29	1	Screw-HH
21	55-9290	1	Pulley-Idler
22	36-3860	1	Screw-HWH, TAP
23	12-3270	2	Screw
24	16-9449	1	Cover-Drive

Ref	Part No.	Qty.	Description
25	32105-15	2	Screw
26	32112-11	1	Nut-Push
27	55-9520	1	Roller-Brake
28	55-9570	1	Pivot Plate ASM
29	55-9550	1	Brake-Arm
30	321-30	1	Screw-HH
31	3290-456	1	Washer-Belleville
32	95-2672	1	Pulley Rotor ASM
33	321-4	2	Screw-HH
34	32105-8	3	Screw-SHH
35	94-2561	1	Decal-Hot
35	95-1904	1	Decal-Hot

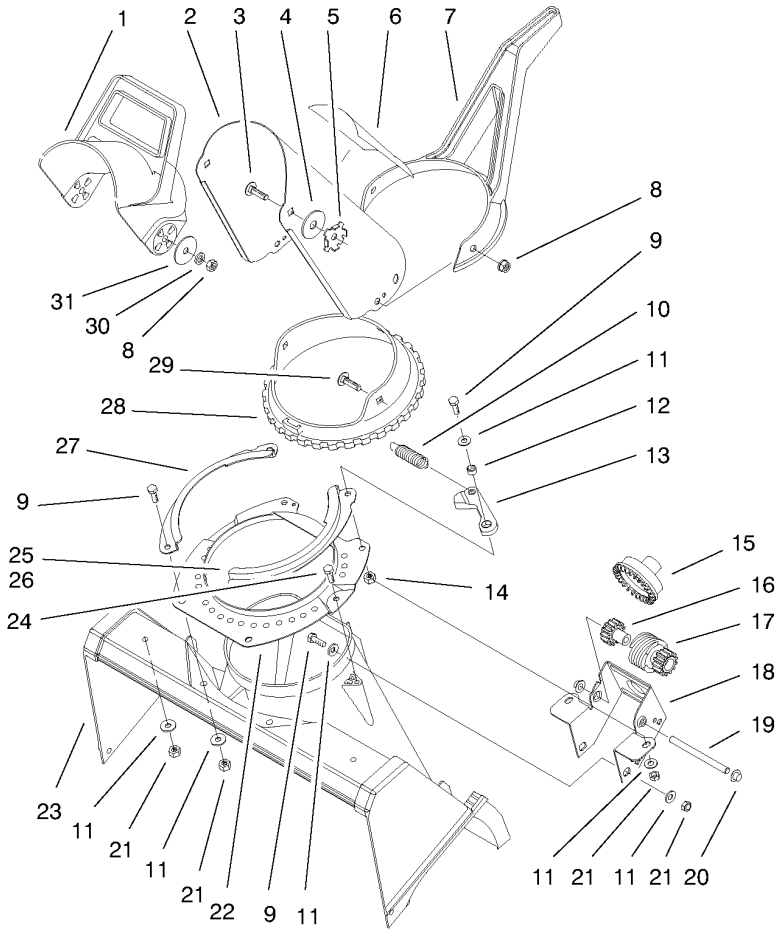

Deflector and Discharge Assembly

Ref	Part No.	Qty.	Description
1	56-2680	1	Chute-Deflector
2	94-2790	1	Chute ASM W/Decal
2	94-2791	1	Chute ASM W/Decal
3	3230-22	2	Screw-CARR
4	20-4320	2	Washer-Rubber
5	55-8950	2	Plate-Friction
6	94-2900	1	Decal - Danger Discharge
6	94-2901	1	Decal-Danger
7	94-9914	1	Handle-Control, Chute
8	3296-29	5	Nut-Lock, NI
9	321-4	4	Screw-HH
10	80-4600	1	Spring-Extension
11	3256-22	5	Washer-Flat
12	55-9370	1	Spacer-Blade, Rotor
13	80-4610	1	Detent
14	3296-56	1	Nut-Lock, NI
21	3296-42	5	Nut-Lock, NI
22	55-8921-03	1	Ring-Support, Chute
23	55-8700	1	Housing
24	46-8092	2	Screw-Plastite
25	71-4980-03	1	Retainer-Chute, LH
27	71-4990-03	1	Retainer-Chute, RH
28	71-4950	1	Gear Ring, Chute
29	3230-23	3	Screw-CARR

Ref	Part No.	Qty.	Description
30	3290-456	2	Washer-Belleville
31	3256-68	2	Washer-Flat

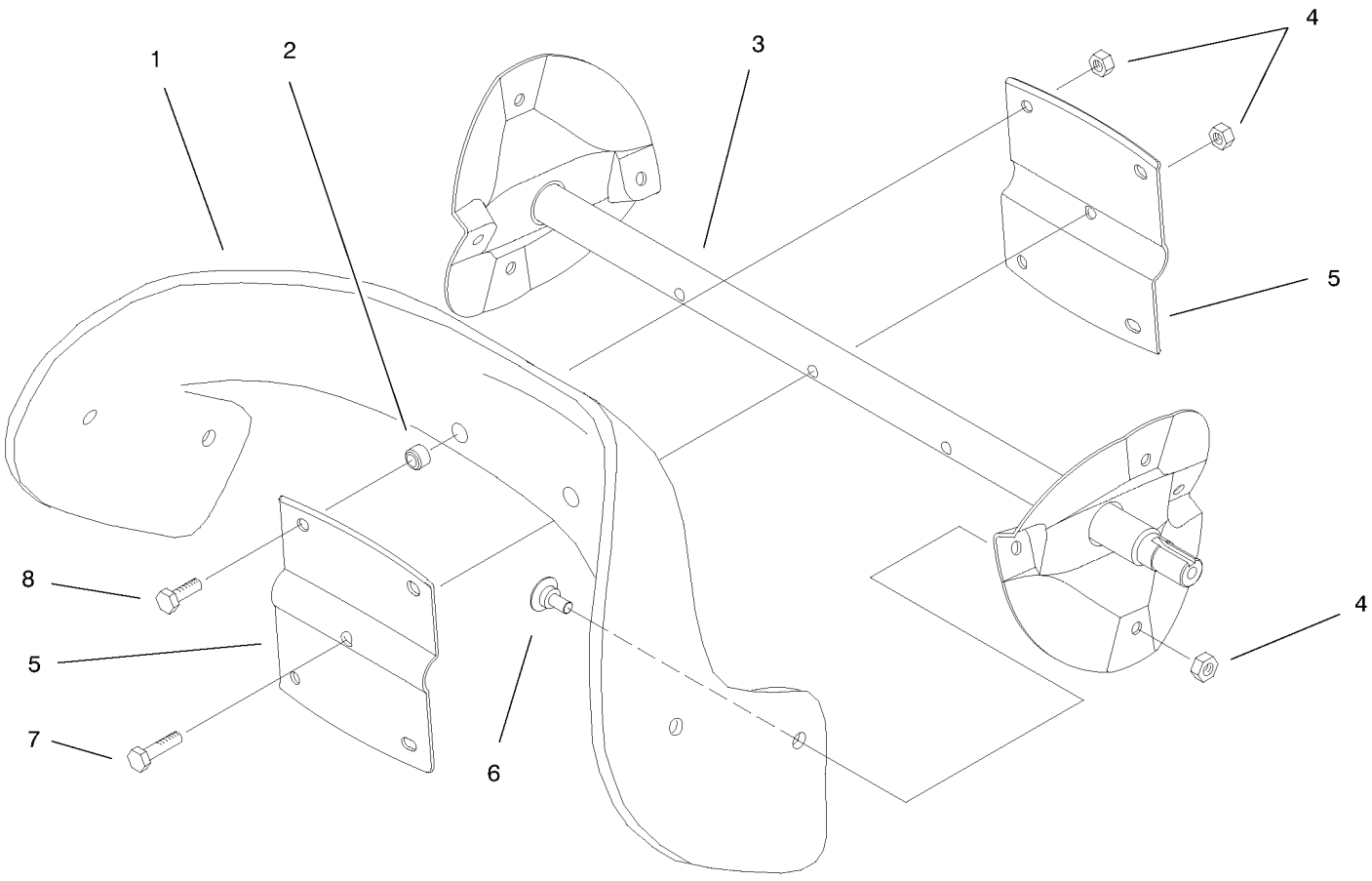

Rotor Assembly

Ref	Part No.	Qty.	Description
1	88-0771	2	Blade-Rotor
2	55-9370	4	Spacer-Blade, Rotor
3	55-9202-03	1	Rotor
4	3296-56	12	Nut-Lock, NI
5	66-6600-03	2	Half-Rotor
6	84-1971	8	Screw
7	321-8	1	Screw-HH
8	321-4	4	Screw-HH

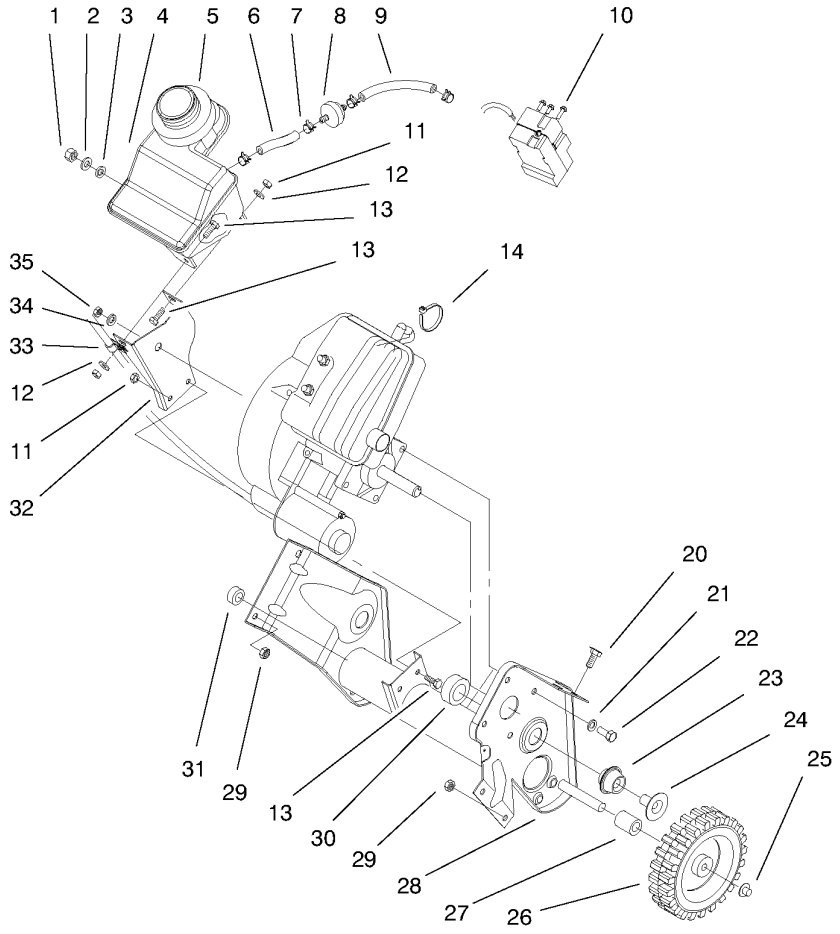

Engine and Gas Tank Assembly

Ref	Part No.	Qty.	Description
1	32152-8	1	Nut-Lock, Cone
2	3256-23	1	Washer-Flat
3	237-89	1	Grommet-Rubber
4	94-9920	1	Tank-Gas
5	55-9310	1	Seal-Foam
6	49-2482	1	Line-Fuel
7	2412-98	4	Clamp
8	56-6360	1	Filter-Fuel
9	94-9932	1	Hose-Fuel
10	32144-27	3	Screw
11	3296-42	4	Nut-Lock, NI
12	3256-22	2	Washer-Flat
13	321-4	4	Screw-HH
14	250-4	1	Tie-Cable
20	322-3	2	Screw-HH
21	3290-456	5	Washer-Belleville
22	322-3	4	Screw-HH
25	32112-14	2	Nut-Push
26	66-6510	2	Wheel
27	66-6501	1	Spacer-Wheel
28	95-1892-03	1	Frame
29	3296-29	3	Nut-Lock, NI
31	66-6500	1	Spacer-Wheel
32	94-9918-03	1	Support-Recoil

Ref	Part No.	Qty.	Description
33	2412-91	1	Clamp
34	71-5320	1	Washer-Support, Engine
35	3296-16	1	Nut-Lock, NI

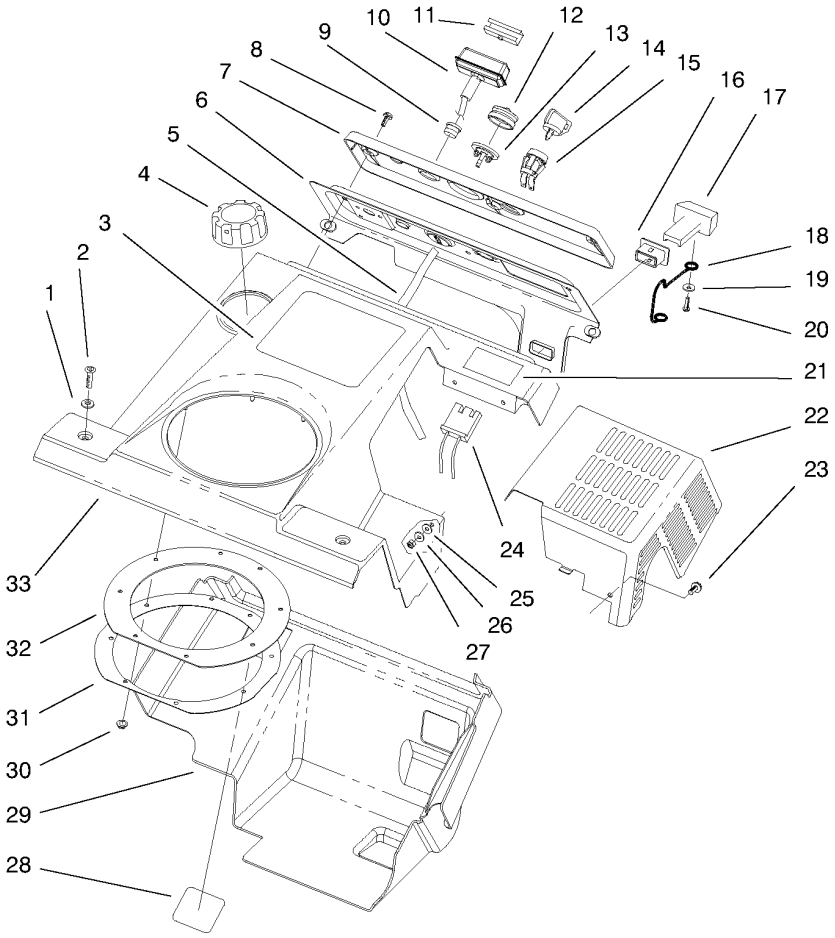

Shroud Assembly

Ref	Part No.	Qty.	Description
1	3256-22	2	Washer-Flat
2	3250-32	2	Screw-PPH
3	98-1356	1	Decal - Ccr 2400 Gts E
3	98-1355	1	Decal - Ccr 2400 Gts
4	55-3573	1	Cap-Fuel ASM
5	98-1372	1	Hose-Primer
6	55-9490-03	1	Panel-Control
7	55-9350	1	Control Nameplate
7	61-4410	1	Plate-Name
7	94-2569	1	Plate
7	94-2570	1	Nameplate-Control
8	32144-112	3	Screw-HWH
9	55-9410	1	Guide-Rope, Starter
10	612825	1	Handle-Start
11	612824	1	Clip-Starter
12	66-7460	1	Bulb-Primer
13	44-2750	1	Body-Primer
14	63-8360	1	Key-Ignition
15	40-5940	1	Switch
16	55-8820	1	Fitting
17	55-8810	1	Control-Choke
17	55-8811	1	Choke Control
18	95-7439	1	Linkage-Choke
19	3256-49	1	Washer-Flat

Ref	Part No.	Qty.	Description
20	32144-111	1	Screw-PPH
21	98-1373	1	Decal
22	94-9924-03	1	Shield-Heat
23	32105-8	3	Screw-SHH
24	218-532	1	Connector-Body
25	55-9660	3	Washer
26	3256-14	3	Washer-Flat
27	3296-12	3	Nut-Lock
28	61-4790	1	Decal
29	94-9919	1	Shroud - Lower
30	3290-474	8	Palnut
31	55-9540-03	1	Retainer-Seal, Chute
32	55-9260	1	Seal-Chute
33	94-9925	1	Shroud - Upper

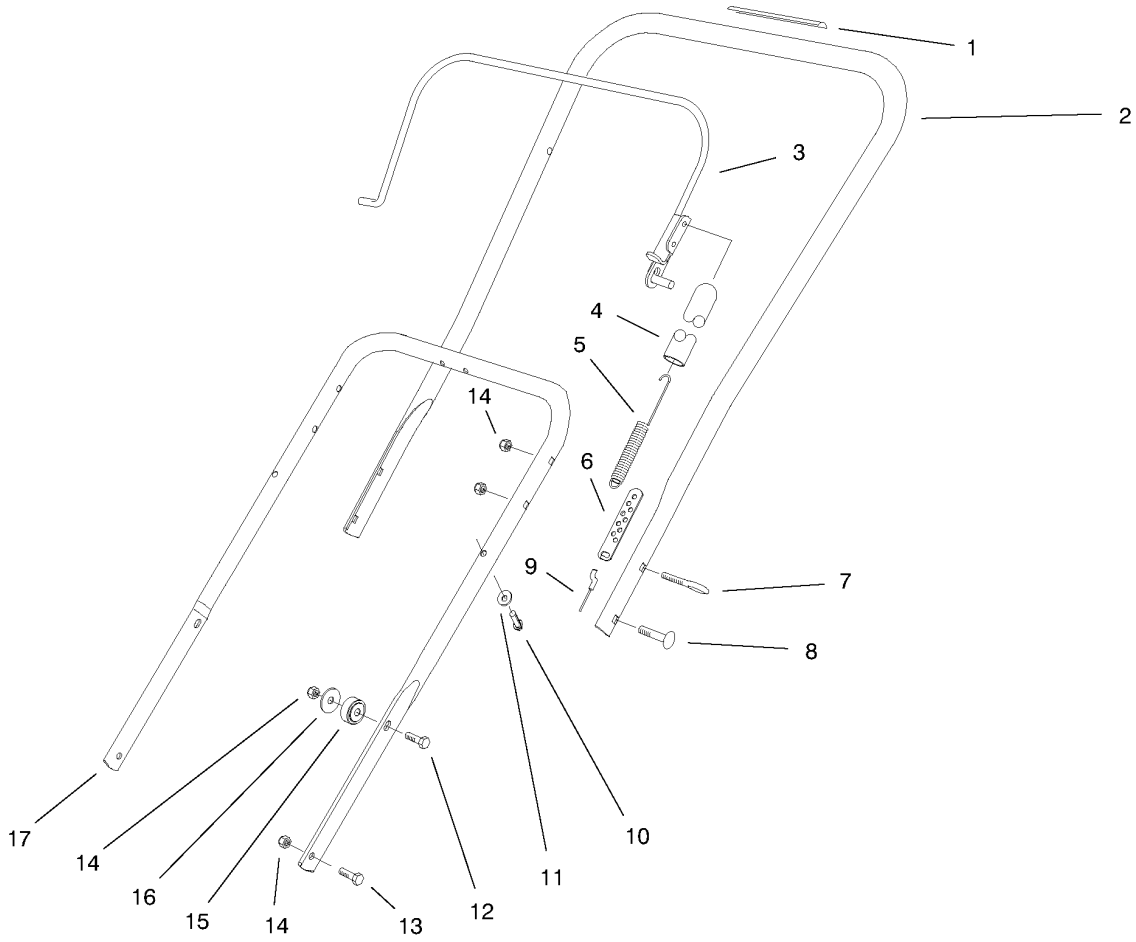

Handle Assembly

Ref	Part No.	Qty.	Description
1	66-6870	1	Decal - Rotor Drive
1	94-2577	1	Decal-Rotor Drive
2	95-2667	1	Handle-Upper
2	95-2668	1	Handle-Upper W/Decal
3	71-5120-03	1	Bail ASM
4	71-5530	1	Cover-Spring
5	71-5480	1	Spring-Clutch
6	55-9380	1	Adjuster-Cable
7	55-9420	1	Bolt-Eye
8	17-9424	3	Screw
9	94-9922	1	Cable-Clutch
10	61-8640	2	Screw
11	3-7501	2	Washer
12	322-17	2	Screw-HH
13	322-3	2	Screw-HH
14	3296-29	8	Nut-Lock, NI
15	94-9923	2	Spacer - Lower Handle
16	3256-68	2	Washer-Flat
17	55-9121-03	1	Handle-Lower

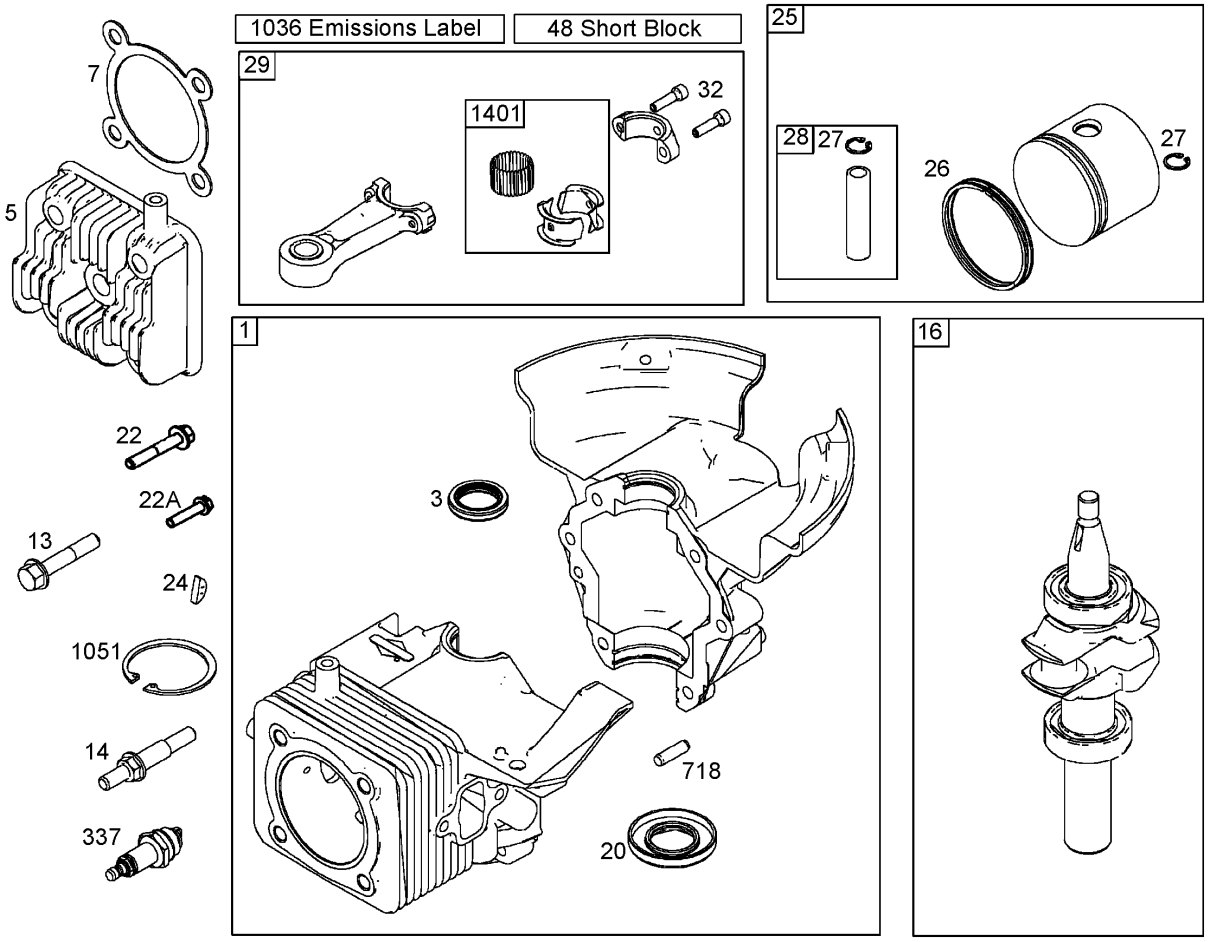

Cylinder, Piston, and Connecting Rod Assemblies
Briggs and Stratton 084133-0196-E1

Ref	Part No.	Qty.	Description
❶1	801322	1	Cylinder ASM
❶3	801262	1	Seal-Oil
❶5	801283	1	Head-Cylinder
❶7	801263	1	Gasket-Head, Cylinder
❶13	801264	1	Screw (Cylinder Head)
❶14	801265	1	Stud (Cylinder Head)
❶16	801220	1	Crankshaft
❶20	801261	1	Seal-Oil
❶22	801266	1	Screw (Crankcase And Cover Sump)
❶22A	801271	1	Screw (Crankcase And Cover Sump)
❶24	801234	1	Key-Flywheel
❶25	801279	1	Piston ASM
❶26	801280	1	Ring Set
❶27	801275	1	Lock-Pin, Piston
❶28	801276	1	Pin-Piston
❶29	801277	1	Rod-Connecting
❶32	801278	1	Screw
❶48	801285	1	Short Block
❶337	801254	1	Plug-Spark
❶718	690959	1	Pin-Locating
❶1036	801294	1	Label-Emissions
❶1051	801274	1	Ring-Retaining

Ref	Part No.	Qty.	Description
❶1401	801290	1	Roller-Strip

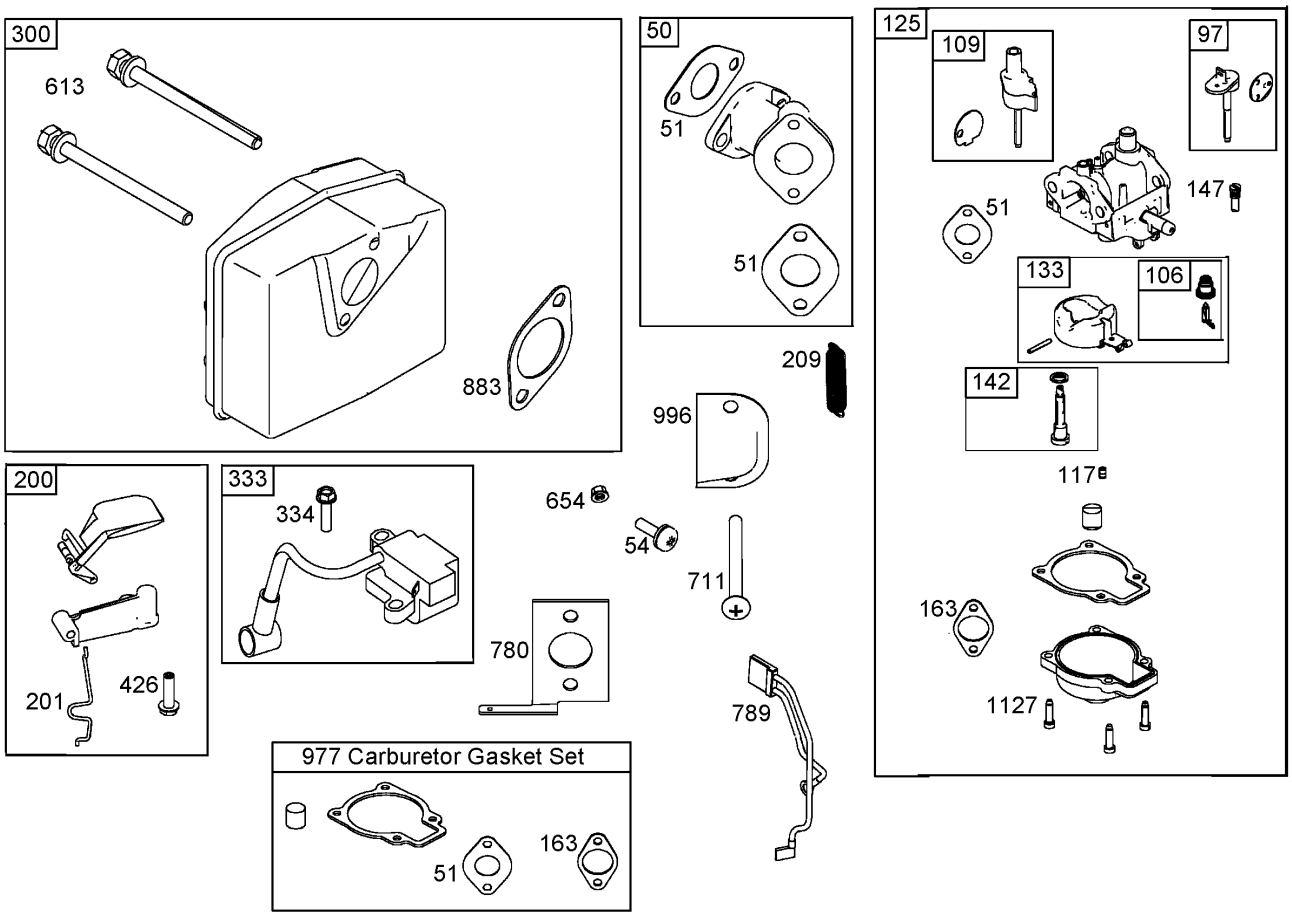

Muffler, Carburetor, and Intake Manifold Assemblies
Briggs and Stratton 084133-0196-E1

Ref	Part No.	Qty.	Description
❶50	801232	1	Manifold-Intake
❶51	801224	1	Gasket-Intake
❶54	801230	1	Screw (Intake Manifold)
❶97	801306	1	Shaft-Throttle
❶106	801317	1	Seat-Inlet
❶109	801307	1	Shaft-Choke
❶117	801310	1	Jet-Main
❶125	801233	1	Carburetor
❶133	801316	1	Float-Carburetor
❶142	801313	1	Nozzle-Carburetor
❶147	801308	1	Jet-Pilot
❶163	801227	1	Gasket-Cleaner, Air
❶200	801289	1	Blade-Governor
❶201	801225	1	Link-Vane, Air
❶209	801223	1	Spring-Governor
❶300	801250	1	Muffler
❶333	801268	1	Armature-Magneto
❶334	801267	1	Screw
❶426	801231	1	Screw
❶613	801251	1	Screw
❶654	801324	1	Nut (Intake Manifold) (Used Before Engine Code Date 05042600)
❶711	801229	1	Screw (Starter Motor)

Ref	Part No.	Qty.	Description
❶780	801228	1	Anchor-Spring
❶789	801253	1	Wire ASM
❶883	801252	1	Gasket-Exhaust
❶977	801312	1	Gasket Set-Carburetor
❶996	801226	1	Shield-Carburetor
❶1127	801318	1	Screw

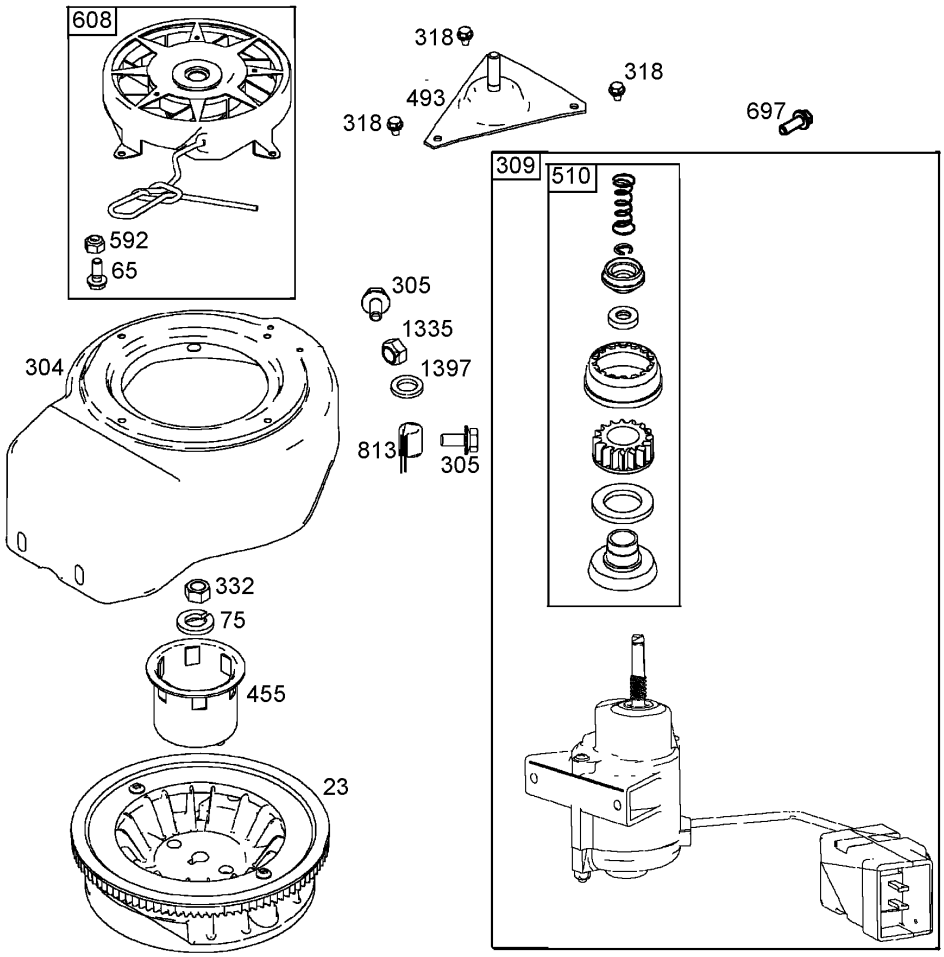

Flywheel, Blower Housing, and Starter Assemblies
Briggs and Stratton 084133-0196-E1

Ref	Part No.	Qty.	Description
❶23	801246	1	Flywheel
❶65	801243	1	Screw
❶75	801237	1	Washer
❶304	801236	1	Housing-Blower
❶305	801239	1	Screw (Blower Housing)
❶309	801247	1	Motor-Starter
❶318	801241	1	Screw
❶332	801238	1	Nut
❶455	801235	1	Cup-Flywheel
❶493	801240	1	Bracket-Mounting
❶510	801293	1	Drive-Starter
❶592	801244	1	Nut
❶608	801242	1	Starter-Rewind
❶697	801248	1	Screw
❶813	801249	1	Clamp
❶1335	801269	1	Nut
❶1397	801270	1	Washer

NOTES

NOTES

NOTES


TORO®