Form Number 3354-760 Rev B

CCR™ 3600 and 3650 Snowthrower

Model No. 38439 - 200000001 and up.
Model No. 38440 - 200000001 and up.
Model No. 38445 - 200000001 and up.

Parts Catalog

Ordering Replacement Parts
To order replacement parts, please supply the part number, the quantity, and the description of each part desired.

Understanding Reference Numbers
Each Identified part in an illustration has a reference number. The reference number for a part also appears in the parts list, along with other information about the part.

This catalog uses two special reference number formats, one to indicate parts in a service assembly and another to indicate the quantity of a given part in an illustration.

Service Assembly Reference Numbers
Parts in service assemblies have reference numbers in the form a:b. The a represents the reference number of the entire service assembly and the b represents a sequential number unique to each part within the service assembly.

For example, a wheel assembly might be identified by reference number 6, the tire by 6:1, the valve by 6:2, and the wheel by 6:3. When you order the assembly identified by reference number 6, you receive all parts identified by reference numbers 6:1, 6:2, and 6:3. However, you may also order any part individually. Reference numbers of this type appear in illustrations and in part lists.

Reference Numbers Indicating Quantity
In an illustration, if a reference number indicates more than one part, the reference number has the form nX y. The n represents the quantity of the part, the X is the multiplication symbol, and the y represents the reference number.

For example, in an illustration, the reference number 2X 37 means that two of the parts identified by reference number 37 are indicated.

© The Toro Company - 2006
All Rights Reserved

Register your product at www.Toro.com

Contents

Description	Page
Housing and Side Plates Assembly	3
Impeller Drive Assembly	4
Chute Assembly	5
Impeller Assembly	6
Engine and Frame Assembly	7
Upper Shroud and Control Panel Assembly	8
Handle Assembly	9
Cylinder, Piston, and Connecting Rod Assemblies Briggs and Stratton 084232-0121-E1	10
Muffler, Carburetor, and Intake Manifold Assemblies Briggs and Stratton 084232-0121-E1	11
Flywheel, Blower Housing and Starter Assemblies Briggs and Stratton 084232-0121-E1	12
Cylinder, Piston, and Connecting Rod Assemblies Briggs and Stratton 084233-0198-E1	13
Muffler, Carburetor, and Intake Manifold Assemblies Briggs and Stratton 084233-0198-E1	14
Flywheel, Blower Housing, and Starter Assemblies Briggs and Stratton 084233-0198-E1	15

Part Description Abbreviations

Part descriptions in this catalog may include the following abbreviations.

AR	as required
ASM	assembly
BBC	blade brake clutch
CARR	carriage
DEG	degrees
EXT	external
FH	flat head
GA	gauge
HF	hex flange
HH	hex head
HHF	hex head flange
HHFTF	hex head flange thread forming
HJ	hex jam
HLH	hex lag head
HOC	height-of-cut
HSBH	hex socket button head
HSFH	hex socket flat head
HSH	hex socket head
HWH	hex washer head
HWHTF	hex washer head thread forming
HYD	hydraulic
INC	incorporated
LH	left hand
NI	nylon insert
NPTF	national pipe thread fine
PFH	phillips flat head
PPH	phillips pan head
PPHTF	phillips pan head thread forming
PRH	phillips round head
PTH	phillips truss head
PTO	power-take-off
RH	right hand
ROPS	roll-over-protection-system
SFH	slotted fillister head
SHH	slotted hex head
SHWH	slotted hex washer head
SPH	slotted pan head
SQH	square head
SRH	slotted round head
STD	standard
TAP	self tapping
TTH	torx truss head

Footnotes

❶ Not illustrated

❷ Not serviced separately

❸ Obtain from your local Briggs & Stratton dealer

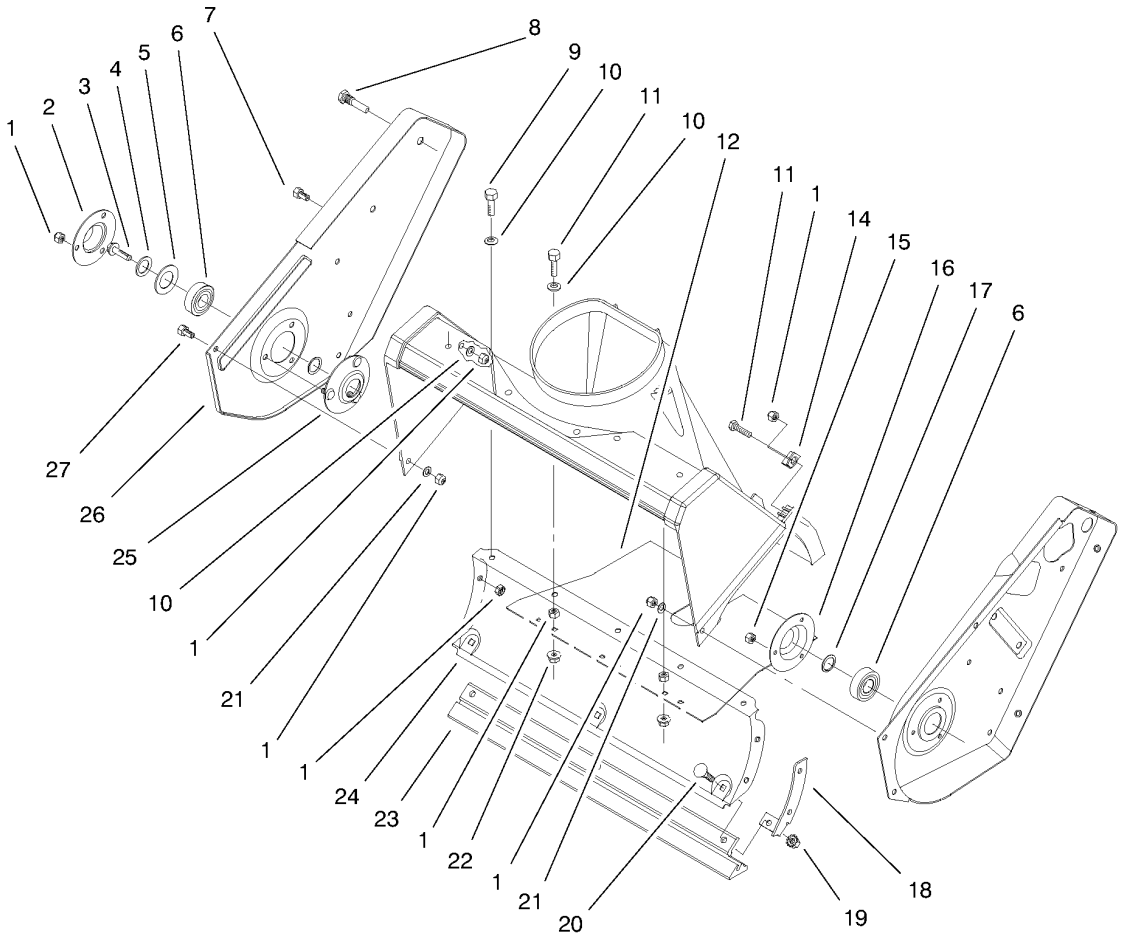

Housing and Side Plates Assembly

Ref	Part No.	Qty.	Description
1	3296-42	16	Nut-Lock, NI
2	52-7290-03	1	Retainer-Bearing
3	3234-25	1	Screw-HHF
4	3256-24	1	Washer-Flat
5	52-7270	1	Washer-Rubber
6	38-7820	2	Bearing-Ball
7	322-43	1	Screw-HH
8	38-8211	1	Pin-Rotor
9	321-4	3	Screw-HH
10	3256-22	7	Washer-Flat
11	321-6	3	Screw-HH
12	55-9512	1	Cover-Bottom
14	55-9430	1	Bracket-Housing
15	3296-2	3	Nut-Lock
16	38-8620	1	Flange-Bearing
17	52-7280	2	Washer-Thrust
18	56-2610	1	Bracket-Housing, Lower
19	32149-2	3	Nut-Keps
20	3229-11	3	Screw-CARR
21	3256-67	2	Washer-Flat
22	32128-10	2	Nut-Lock, HHF
23	55-8760	1	Scraper
24	55-9220-03	1	Housing-Lower
25	52-9110	1	Flange-Bearing

Ref	Part No.	Qty.	Description
26	55-8840-03	1	Plate-Side, RH
27	32105-15	5	Screw

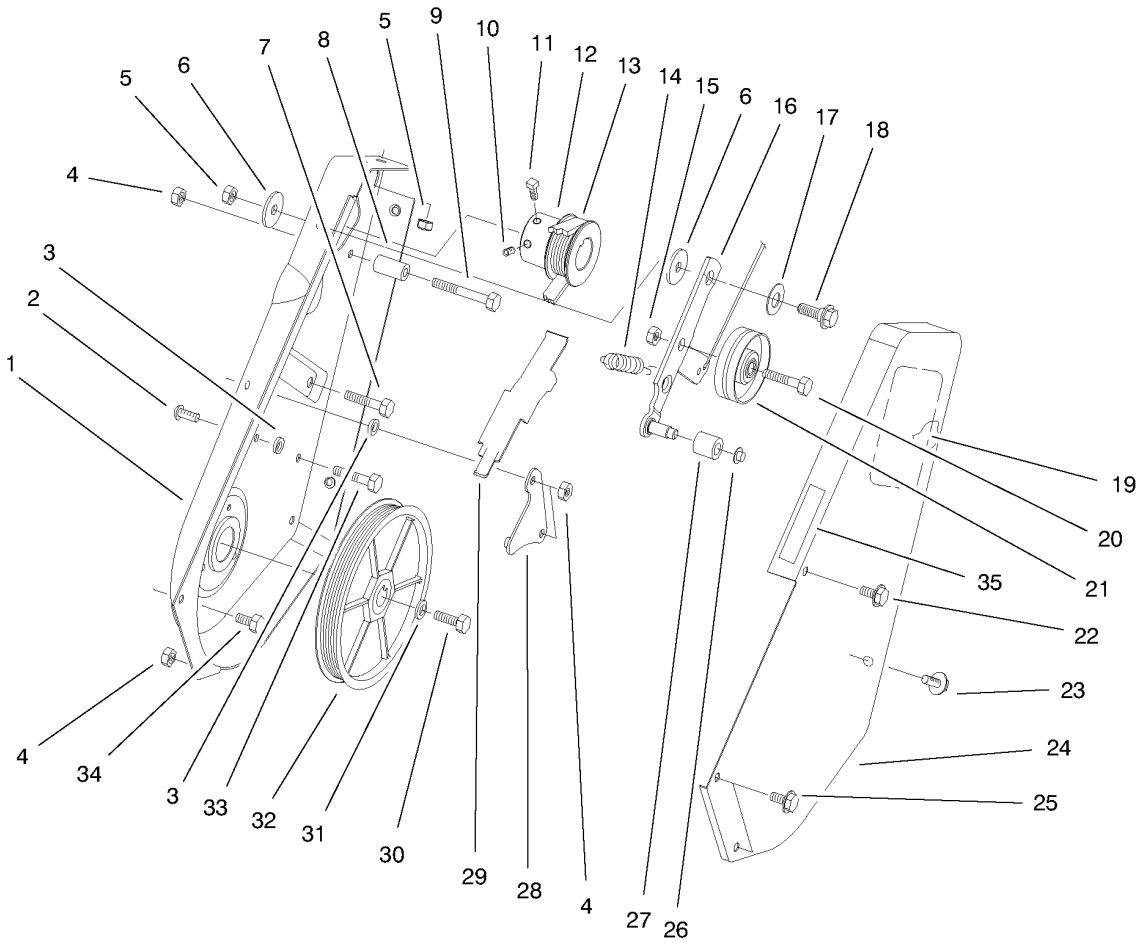

Impeller Drive Assembly

Ref	Part No.	Qty.	Description
1	55-8851-03	1	Plate-Side, LH
2	3274-31	1	Screw-HSBH
3	55-9620	2	Spacer-Plate, Pivot
4	3296-42	5	Nut-Lock, NI
5	3296-29	3	Nut-Lock, NI
6	5-4460	2	Washer-Pivot
7	322-3	2	Screw-HH
8	55-9530	1	Sleeve-Guide, Belt
9	321-13	1	Screw-HH
10	3245-41	1	Screw-HSH
11	3241-7	1	Screw-SQH
12	95-2673	1	Pulley-Engine
13	95-6151	1	Belt-Drive
14	55-9280	1	Spring-Extension
15	32152-2	1	Nut-Lock, Cone
16	63-3610	1	Idler Arm ASM
17	25-5640	1	Washer
18	27-0410	1	Screw-Shoulder
19	60-9480	1	Decal
20	323-29	1	Screw-HH
21	55-9290	1	Pulley-Idler
22	36-3860	1	Screw-HWH, TAP
23	12-3270	2	Screw
24	55-9010-03	1	Cover-Drive

Ref	Part No.	Qty.	Description
25	32105-152	2	Screw-Machine
26	32112-11	1	Nut-Push
27	55-9520	1	Roller-Brake
28	55-9570	1	Pivot Plate ASM
29	55-9550	1	Brake-Arm
30	321-30	1	Screw-HH
31	3290-456	1	Washer-Belleville
32	95-2672	1	Pulley Rotor ASM
33	321-4	2	Screw-HH
34	32105-8	3	Screw-SHH
35	95-1904	1	Decal-Hot

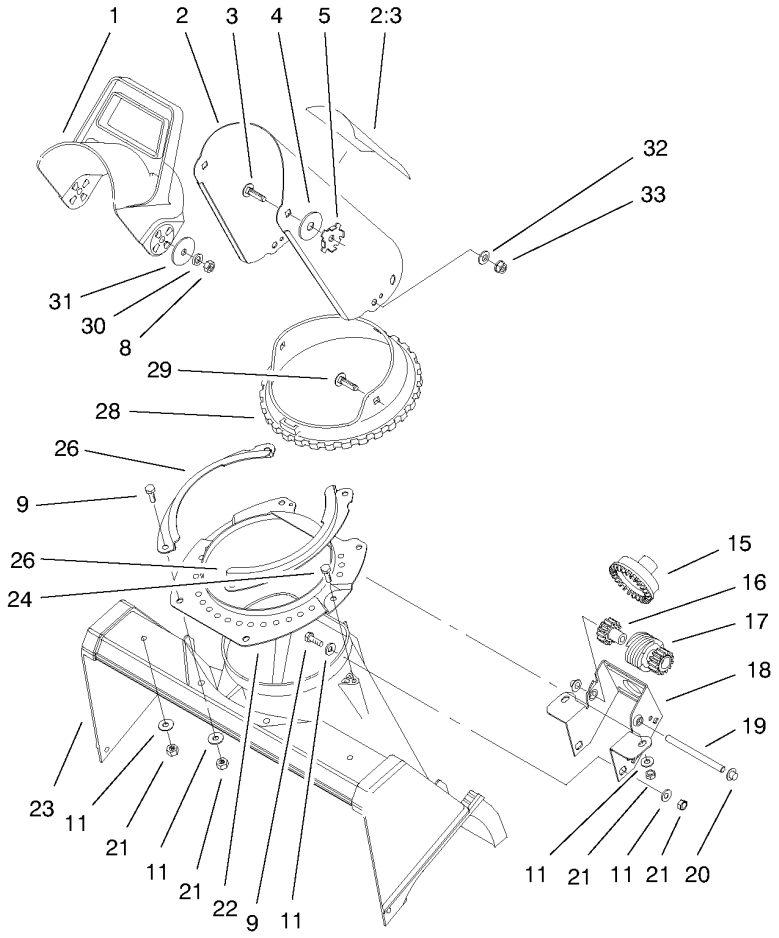

Chute Assembly

Ref	Part No.	Qty.	Description
1	56-2680	1	Chute-Deflector
2	94-2790	1	Chute ASM W/Decal
2:3	94-2900	1	Decal - Danger Discharge
3	3230-22	2	Screw-CARR
4	20-4320	2	Washer-Rubber
5	55-8950	2	Plate-Friction
8	3296-29	2	Nut-Lock NI (Only On: 38439, 38445)
9	321-4	6	Screw-HH
11	3256-22	10	Washer-Flat
15	55-8740	1	Gear-Face
16	55-8750	1	Gear-Spur, Spacer
17	55-8730	1	Gear-Spur/Worm
18	84-5650-03	1	Bracket-Gear, Chute
19	55-9150	1	Shaft-Gear, Worm
20	32112-11	2	Nut-Push
21	3296-42	8	Nut-Lock, NI
22	55-8921-03	1	Ring-Support, Chute
23	55-8700	1	Housing
24	46-8092	2	Screw-Plastite
26	55-8910-03	2	Ring-Retainer, Chute
28	55-8720	1	Ring-Gear, Chute
29	3230-18	3	Screw-CARR
30	3290-456	2	Washer-Belleville

Ref	Part No.	Qty.	Description
31	3256-68	2	Washer-Flat
32	3256-70	3	Washer-Flat
33	3296-29	3	Nut-Lock, NI

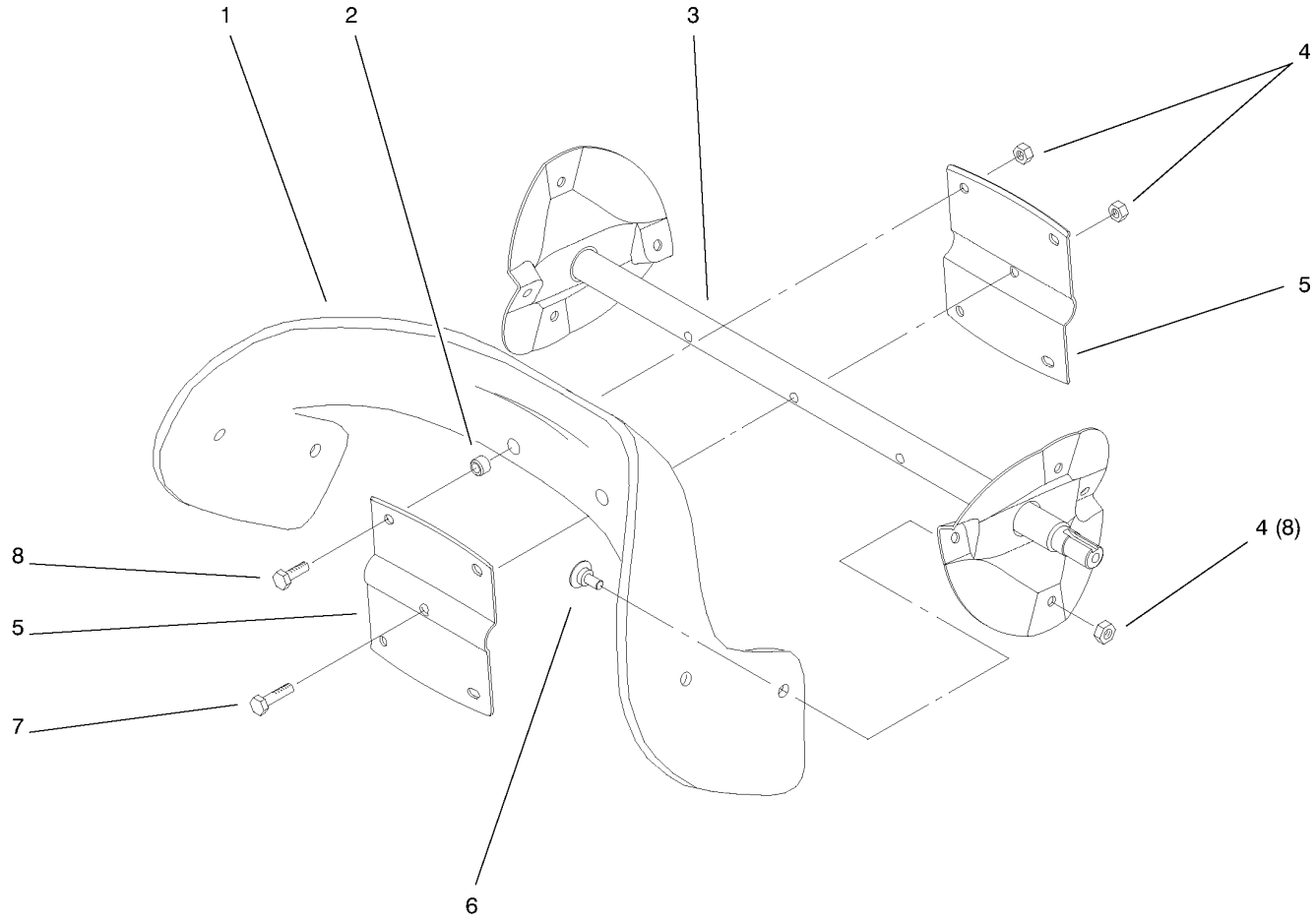

Impeller Assembly

Ref	Part No.	Qty.	Description
1	99-9313	2	Blade-Rotor
2	55-9370	4	Spacer-Blade, Rotor
3	55-9202-03	1	Rotor
4	3296-56	12	Nut-Lock, NI
5	66-6600-03	2	Half-Rotor
6	84-1971	8	Screw
7	321-8	1	Screw-HH
8	321-4	4	Screw-HH

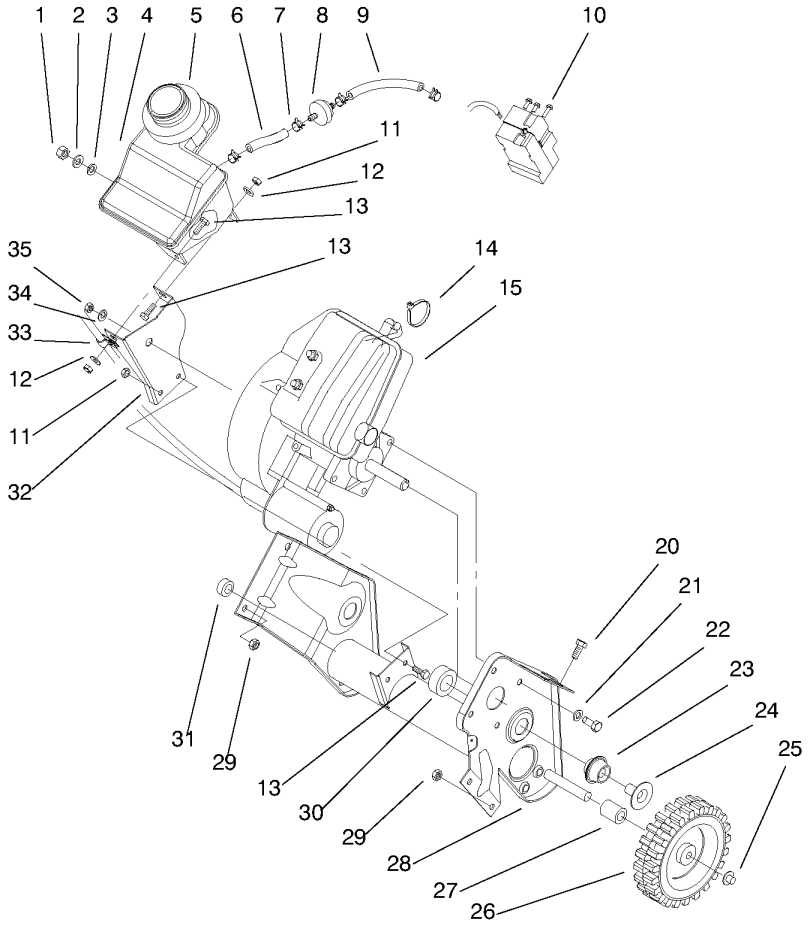

Engine and Frame Assembly

Ref	Part No.	Qty.	Description
1	32152-8	1	Nut-Lock, Cone
2	3256-23	1	Washer-Flat
3	237-89	1	Grommet-Rubber
4	94-9920	1	Tank-Gas
5	55-9310	1	Seal-Foam
6	49-2482	1	Line-Fuel
7	2412-98	4	Clamp
8	56-6360	1	Filter-Fuel
9	94-9932	1	Hose-Fuel
10	32144-27	3	Screw-Plastite (Only On: 38439, 38445)
11	3296-42	4	Nut-Lock, NI
12	3256-22	2	Washer-Flat
13	321-4	4	Screw-HH
14	250-4	1	Tie-Cable
❷15		1	Engine-Briggs And Stratton, 084232-0121-E1 (Only On: 38440)
❷15		1	Engine-Briggs And Stratton, 084232-0121-E1 (Only On: 38439, 38445)
20	322-3	2	Screw-HH
21	3290-456	5	Washer-Belleville
22	322-3	4	Screw-HH
23	55-9460	2	Mount-Rebound

Ref	Part No.	Qty.	Description
24	55-9470	2	Spacer Tube
25	32112-14	2	Nut-Push
26	66-6510	2	Wheel
27	66-6501	1	Spacer-Wheel
28	95-1892-03	1	Frame
29	3296-29	3	Nut-Lock, NI
30	55-9450	2	Load Mount
31	66-6500	1	Spacer-Wheel
32	94-9918-03	1	Support-Recoil
33	2412-91	1	Clamp R (Only On: 38439, 38445)
34	71-5320	1	Washer-Support, Engine
35	3296-16	1	Nut-Lock, NI
❶	28-9170	1	Cord (Only On: 38439, 38445)

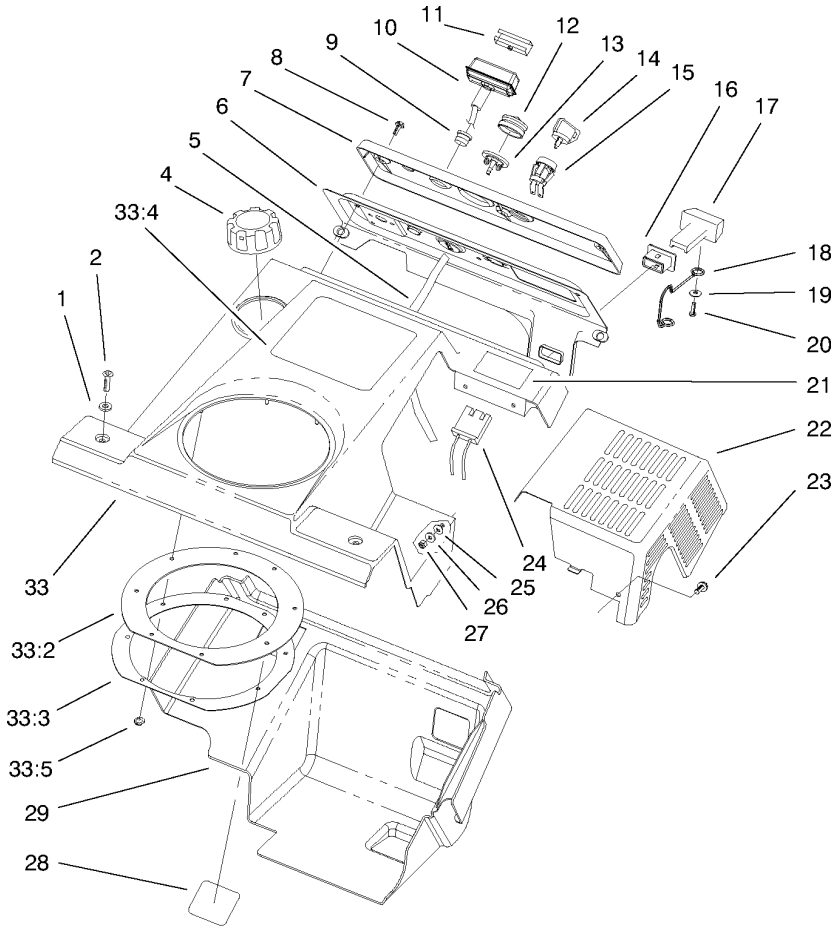

Upper Shroud and Control Panel Assembly

Ref	Part No.	Qty.	Description
1	3256-22	2	Washer-Flat
2	3250-32	2	Screw-PPH
4	55-3573	1	Cap-Fuel ASM
5	98-1372	1	Hose-Primer
6	55-9490-03	1	Panel-Control
7	55-9350	1	Control Nameplate (Only On: 38440)
7	61-4410	1	Control Nameplate Ke (Only On: 38439, 38445)
8	32144-112	3	Screw-HWH
9	55-9410	1	Guide-Rope, Starter
10	612825	1	Handle-Start
11	612824	1	Clip-Starter
12	66-7460	1	Bulb-Primer
13	44-2750	1	Body-Primer
14	63-8360	1	Key-Ignition
15	40-5940	1	Switch
16	55-8820	1	Fitting
17	55-8810	1	Control-Choke
18	95-7439	1	Linkage-Choke
19	3256-49	1	Washer-Flat
20	32144-111	1	Screw-PPH
21	98-1373	1	Decal
22	55-9210-03	1	Shield-Heat

Ref	Part No.	Qty.	Description
23	32105-8	4	Screw-SHH
24	218-532	1	Connector-Body
25	55-9660	4	Washer
26	3256-14	4	Washer-Flat
27	3296-12	4	Nut-Lock
28	61-4790	1	Decal (Only On: 38439, 38445)
29	94-9919	1	Shroud - Lower
33	100-3304	1	Upper Shroud/Decal ASM (Only On: 38439)
33	100-3303	1	Upper Shroud/Decal ASM (Only On: 38445)
33	100-3302	1	Upper Shroud/Decal ASM (Only On: 38440)
33:2	55-9260	1	Seal-Chute
33:3	55-9540-03	1	Retainer-Seal, Chute
33:4	100-3309	1	Decal-Ccr 3600E (Only On: 38439)
33:4	100-3307	1	Decal-Ccr 3650 Gts (Only On: 38440)
33:4	100-3308	1	Decal-Ccr 3650 Gts E (Only On: 38445)
33:5	3290-474	8	Palnut

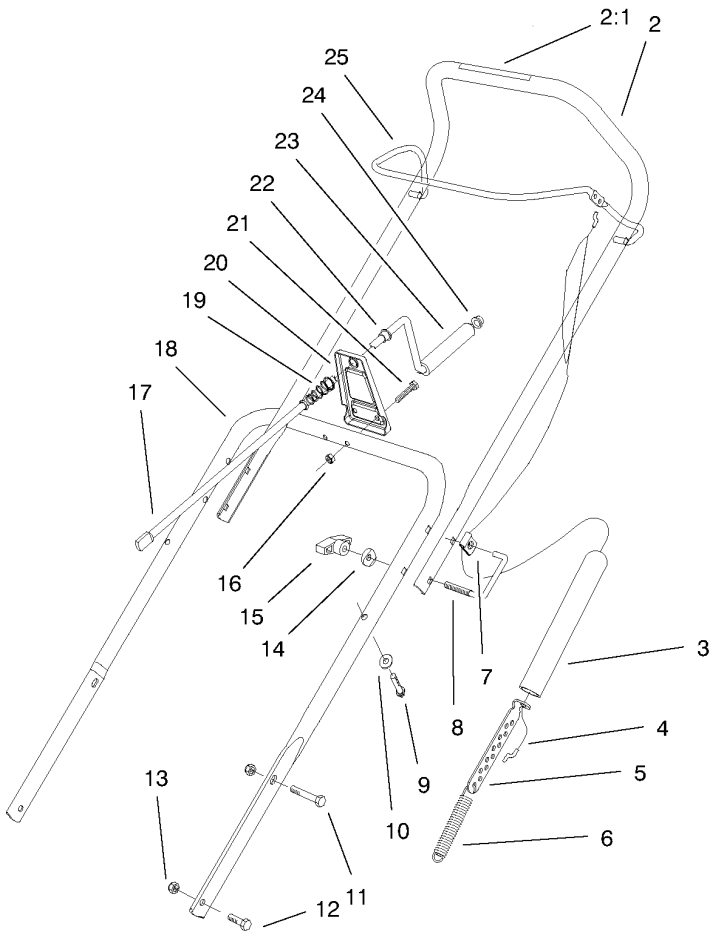

Handle Assembly

Ref	Part No.	Qty.	Description
2	95-2669	1	Handle-Upper W/Decal ASM
2:1	66-6870	1	Decal - Rotor Drive
3	55-9390	1	Cover-Spring
4	55-9322	1	Cable-Clutch
5	55-9380	1	Adjuster-Cable
6	55-9270	1	Spring-Extension
7	2412-112	1	Clamp
8	98-2266	2	Lock-Handle
9	61-8640	2	Screw
10	3-7501	2	Washer
11	322-9	2	Screw-HH
12	322-3	2	Screw-HH
13	3296-29	4	Nut-Lock, NI
14	75-9130	2	Washer-Curved
15	98-7134	2	Knob-Handle
16	3296-42	2	Nut-Lock, NI
17	55-9140	1	Rod-Crank, Chute
18	55-9121-03	1	Handle-Lower
19	55-9440	1	Spring-Compression
20	55-9090-03	1	Support-Crank, Chute
21	321-13	2	Screw-HH
22	256-249	1	Bushing
23	40-8230	1	Grip-Chute Control
24	3290-320	1	Retainer-Push On

Ref	Part No.	Qty.	Description
25	98-2264-03	1	Bar-Control

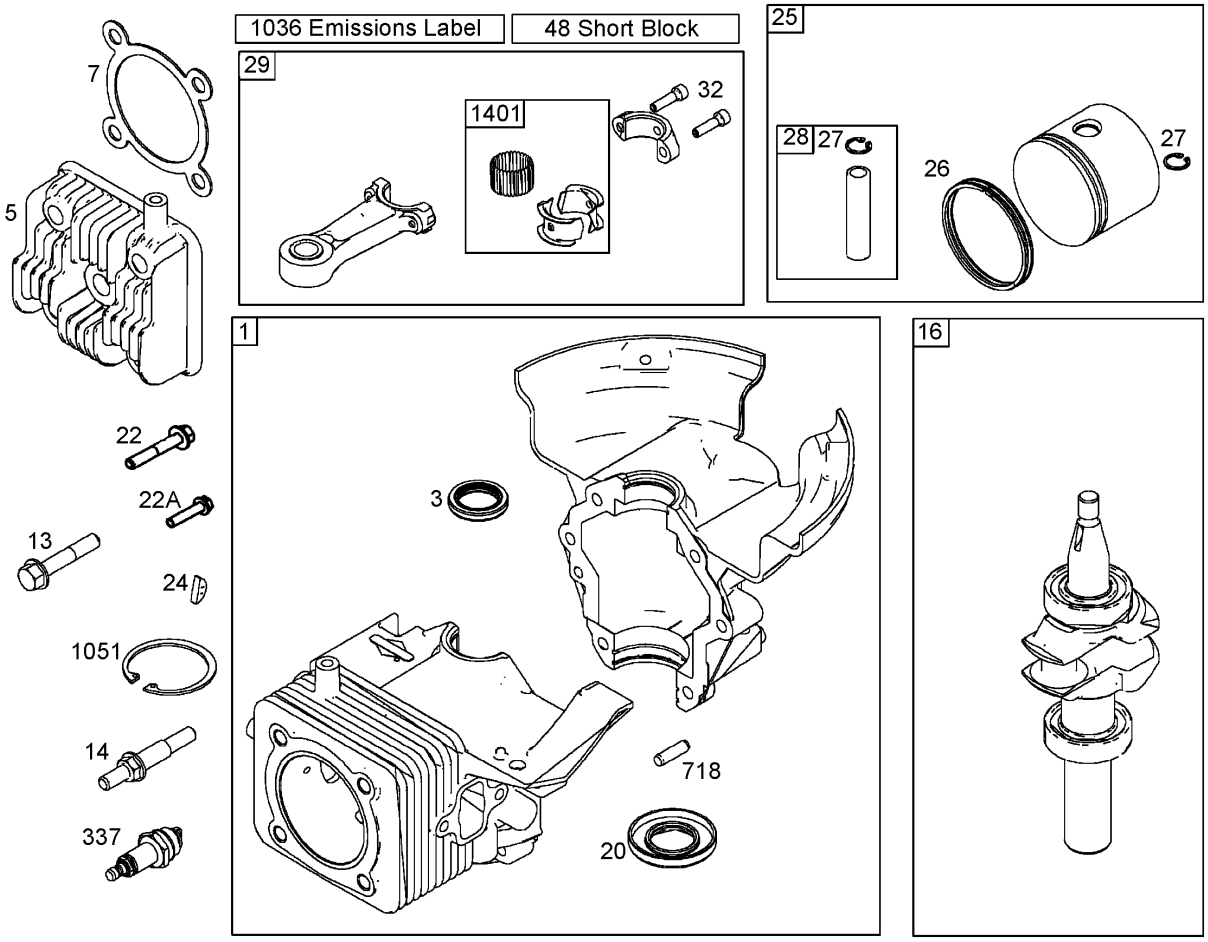

Cylinder, Piston, and Connecting Rod Assemblies
Briggs and Stratton 084232-0121-E1

Ref	Part No.	Qty.	Description
❸1	801260	1	Cylinder ASM
❸3	801262	1	Seal-Oil
❸5	801283	1	Head-Cylinder
❸7	801263	1	Gasket-Head, Cylinder
❸13	801264	1	Screw (Cylinder Head)
❸14	801265	1	Stud (Cylinder Head)
❸16	801220	1	Crankshaft
❸20	801261	1	Seal-Oil
❸22	801266	1	Screw (Crankcase Cover And Sump)
❸22A	801271	1	Screw (Crankcase Cover And Sump)
❸24	801234	1	Key-Flywheel
❸25	801279	1	Piston ASM
❸26	801280	1	Ring Set
❸27	801275	1	Lock-Pin, Piston
❸28	801276	1	Pin-Piston
❸29	801277	1	Rod-Connecting
❸32	801278	1	Screw
❸48	801284	1	Short Block
❸337	801254	1	Plug-Spark
❸718	690959	1	Pin-Locating
❸1036	801294	1	Label-Emissions
❸1051	801274	1	Ring-Retaining

Ref	Part No.	Qty.	Description
❸1401	801290	1	Roller-Strip

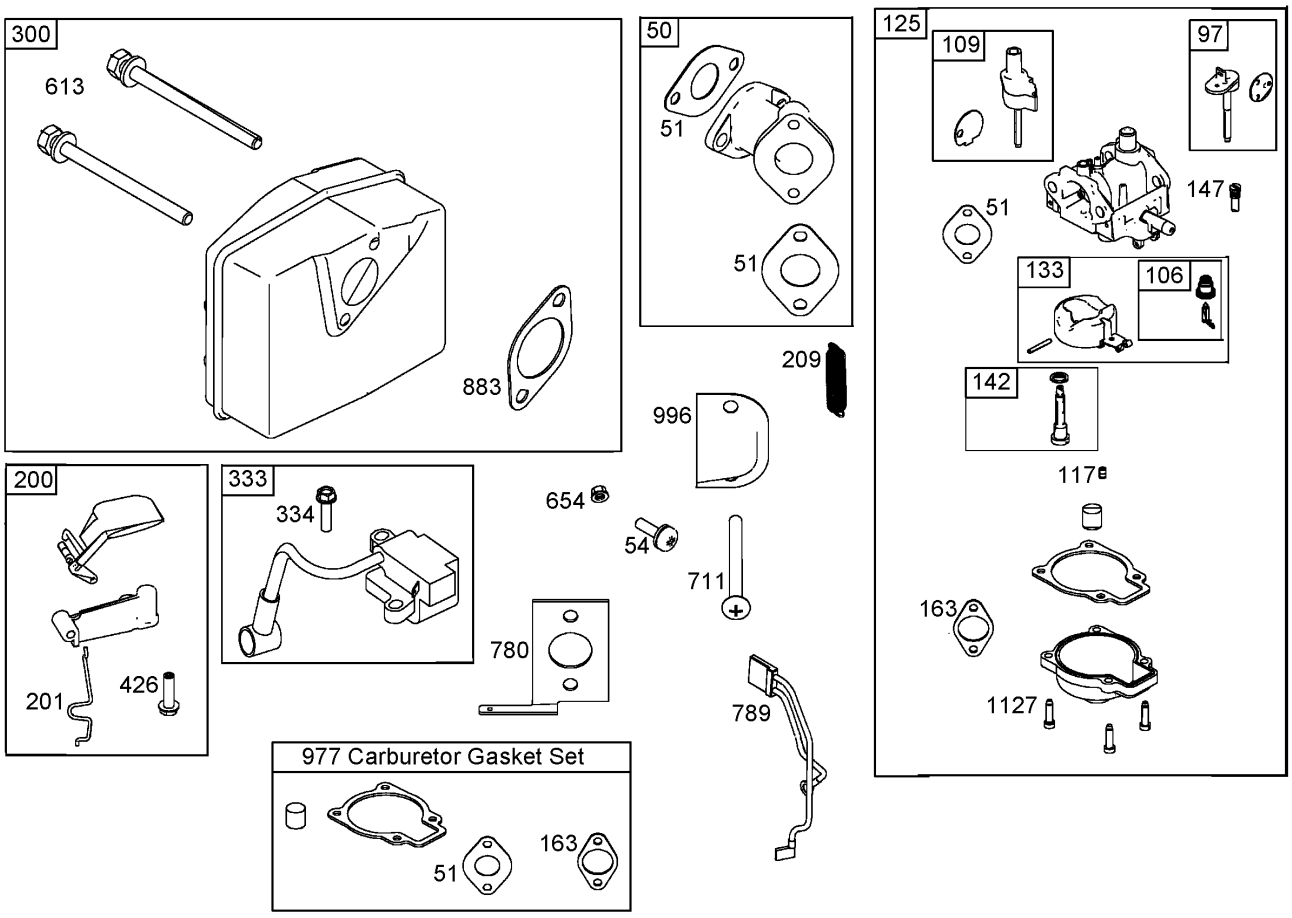

Muffler, Carburetor, and Intake Manifold Assemblies
Briggs and Stratton 084232-0121-E1

Ref	Part No.	Qty.	Description
❸50	801232	1	Manifold-Intake
❸51	801224	1	Gasket-Intake
❸54	801230	1	Screw (Intake Manifold)
❸97	801306	1	Shaft-Throttle
❸106	801317	1	Seat-Inlet
❸109	801307	1	Shaft-Choke
❸117	801310	1	Jet-Main
❸125	801233	1	Carburetor
❸133	801316	1	Float-Carburetor
❸142	801313	1	Nozzle-Carburetor
❸147	801308	1	Jet-Pilot
❸163	801227	1	Gasket-Cleaner, Air
❸200	801289	1	Blade-Governor
❸201	801225	1	Link-Vane, Air
❸209	801223	1	Spring-Governor
❸300	801250	1	Muffler
❸333	801268	1	Armature-Magneto
❸334	801267	1	Screw
❸426	801231	1	Screw
❸613	801251	1	Screw
❸654	801324	1	Nut (Intake Manifold) (Used Before Engine Code Date 05042600)
❸711	801229	1	Screw

Ref	Part No.	Qty.	Description
❸780	801228	1	Anchor-Spring
❸789	801253	1	Wire ASM
❸883	801252	1	Gasket-Exhaust
❸977	801312	1	Gasket Set-Carburetor
❸996	801226	1	Shield-Carburetor
❸1127	801318	1	Screw

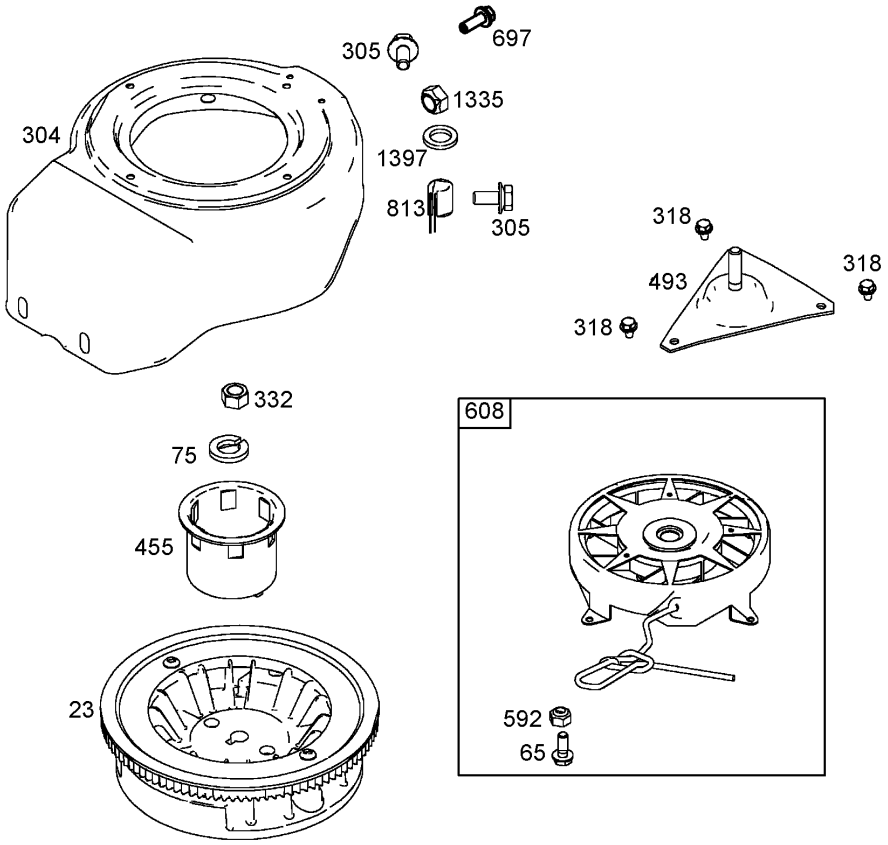

Flywheel, Blower Housing and Starter Assemblies
Briggs and Stratton 084232-0121-E1

Ref	Part No.	Qty.	Description
❸23	801246	1	Flywheel
❸65	801243	1	Screw
❸75	801237	1	Washer
❸304	801257	1	Housing-Blower
❸305	801239	1	Screw (Blower Housing)
❸318	801241	1	Screw
❸332	801238	1	Nut
❸455	801235	1	Cup-Flywheel
❸493	801240	1	Bracket-Mounting
❸592	801244	1	Nut
❸608	801242	1	Starter-Rewind
❸697	801248	1	Screw (Strater Motor)
❸813	801249	1	Clamp
❸1335	801269	1	Nut (Blower Housing)
❸1397	801270	1	Washer

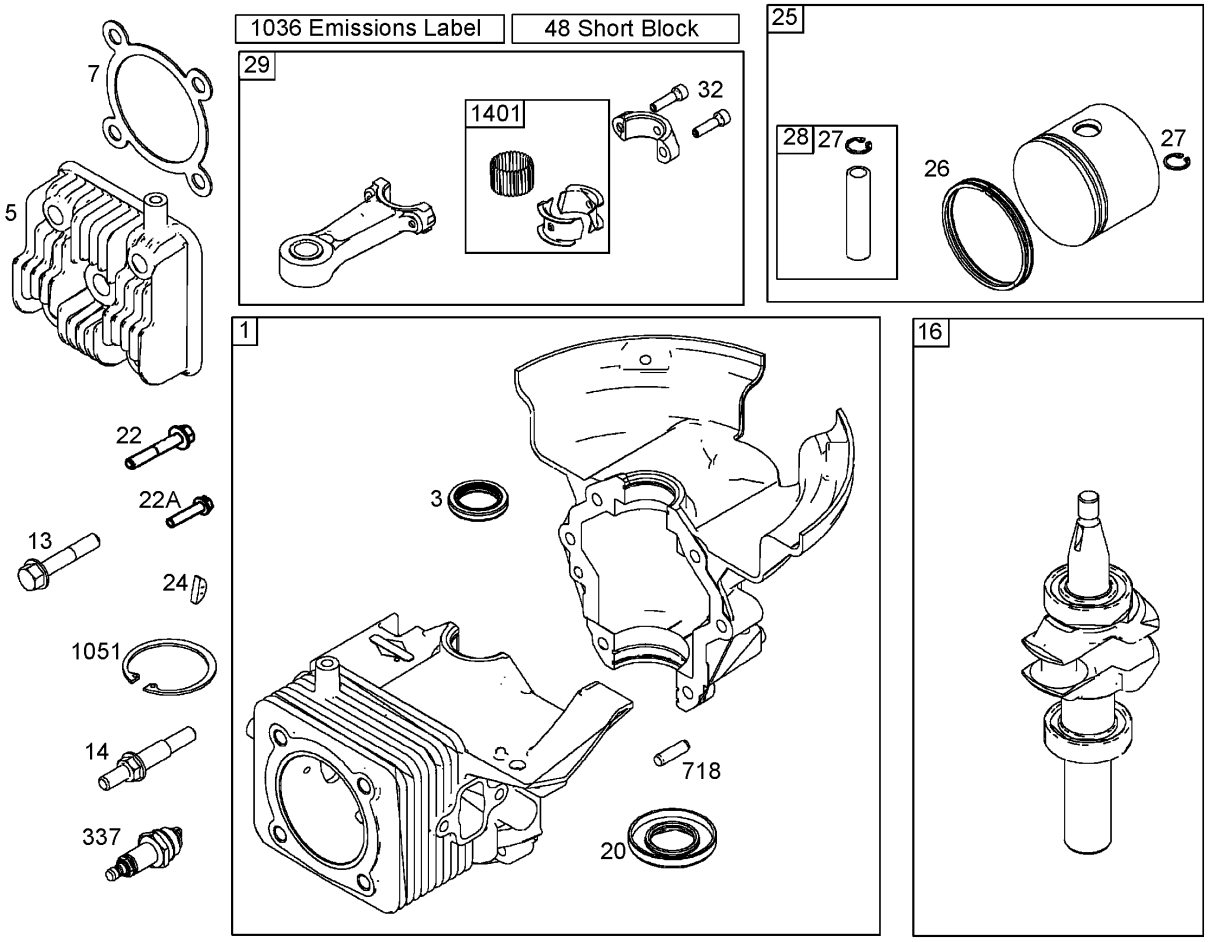

Cylinder, Piston, and Connecting Rod Assemblies
Briggs and Stratton 084233-0198-E1

Ref	Part No.	Qty.	Description
❸1	801322	1	Cylinder ASM
❸3	801262	1	Seal-Oil
❸5	801283	1	Head-Cylinder
❸7	801263	1	Gasket-Head, Cylinder
❸13	801264	1	Screw (Cylinder Head)
❸14	801265	1	Stud (Cylinder Head)
❸16	801220	1	Crankshaft
❸20	801261	1	Seal-Oil
❸22	801266	1	Screw (Crankcase Cover And Sump)
❸22A	801271	1	Screw (Crankcase Cover And Sump)
❸24	801234	1	Key-Flywheel
❸25	801279	1	Piston ASM
❸26	801280	1	Ring Set
❸27	801275	1	Lock-Pin, Piston
❸28	801276	1	Pin-Piston
❸29	801277	1	Rod-Connecting
❸32	801278	1	Screw
❸48	801285	1	Short Block
❸337	801254	1	Plug-Spark
❸718	690959	1	Pin-Locating
❸1036	801294	1	Label-Emissions
❸1051	801274	1	Ring-Retaining

Ref	Part No.	Qty.	Description
❸1401	801290	1	Roller-Strip

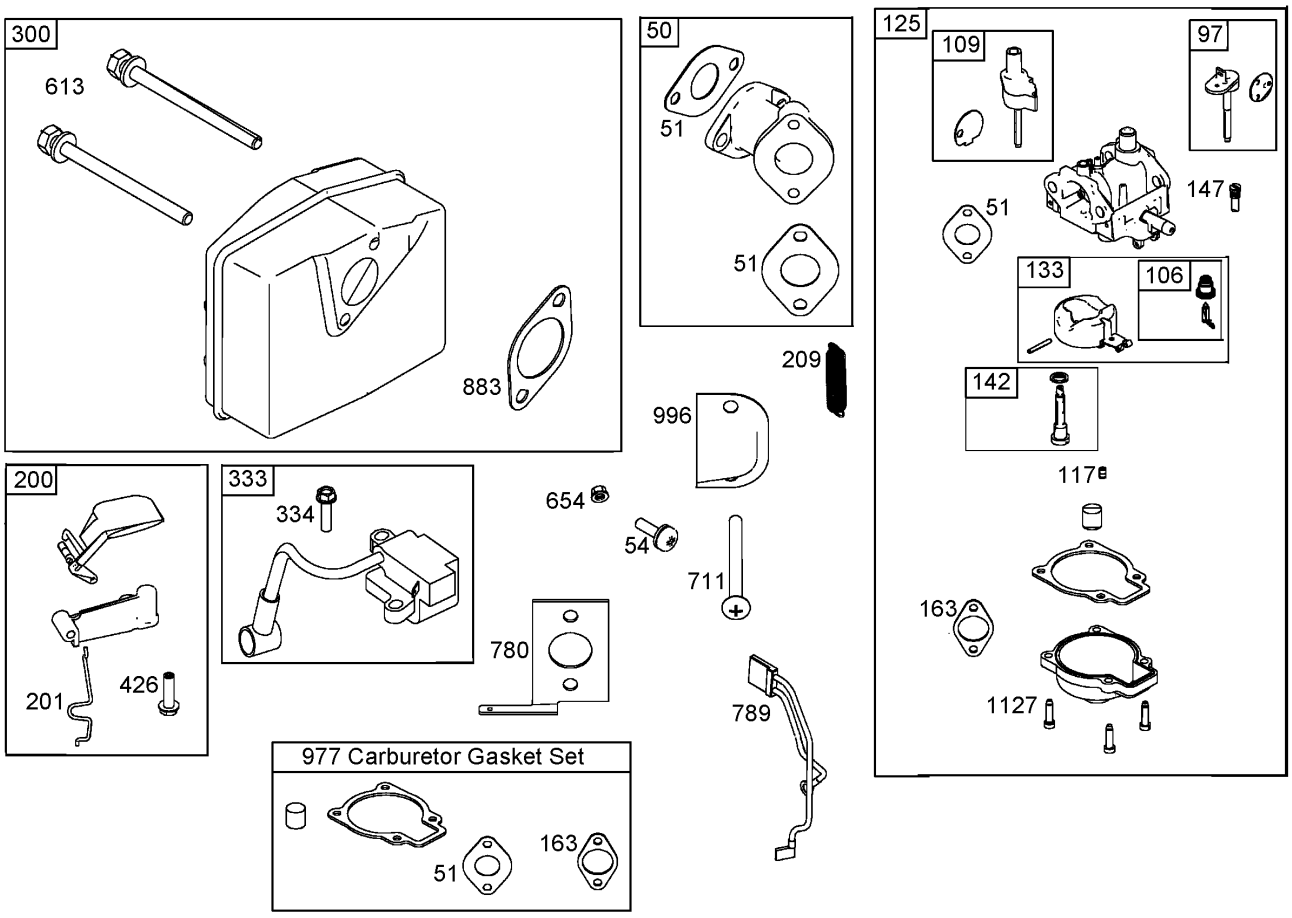

Muffler, Carburetor, and Intake Manifold Assemblies
Briggs and Stratton 084233-0198-E1

Ref	Part No.	Qty.	Description
❸50	801232	1	Manifold-Intake
❸51	801224	1	Gasket-Intake
❸54	801230	1	Screw (Intake Manifold)
❸97	801306	1	Shaft-Throttle
❸106	801317	1	Seat-Inlet
❸109	801307	1	Shaft-Choke
❸117	801310	1	Jet-Main
❸125	801233	1	Carburetor
❸133	801316	1	Float-Carburetor
❸142	801313	1	Nozzle-Carburetor
❸147	801308	1	Jet-Pilot
❸163	801227	1	Gasket-Cleaner, Air
❸200	801289	1	Blade-Governor
❸201	801225	1	Link-Vane, Air
❸209	801223	1	Spring-Governor
❸300	801250	1	Muffler
❸333	801268	1	Armature-Magneto
❸334	801267	1	Screw
❸426	801231	1	Screw
❸613	801251	1	Screw
❸654	801324	1	Nut (Intake Manifold) (Use Before Engine Code Date 05042600)
❸711	801229	1	Screw
❸780	801228	1	Anchor-Spring

Ref	Part No.	Qty.	Description
❸789	801253	1	Wire ASM
❸883	801252	1	Gasket-Exhaust
❸977	801312	1	Gasket Set-Carburetor
❸996	801226	1	Shield-Carburetor
❸1127	801318	1	Screw

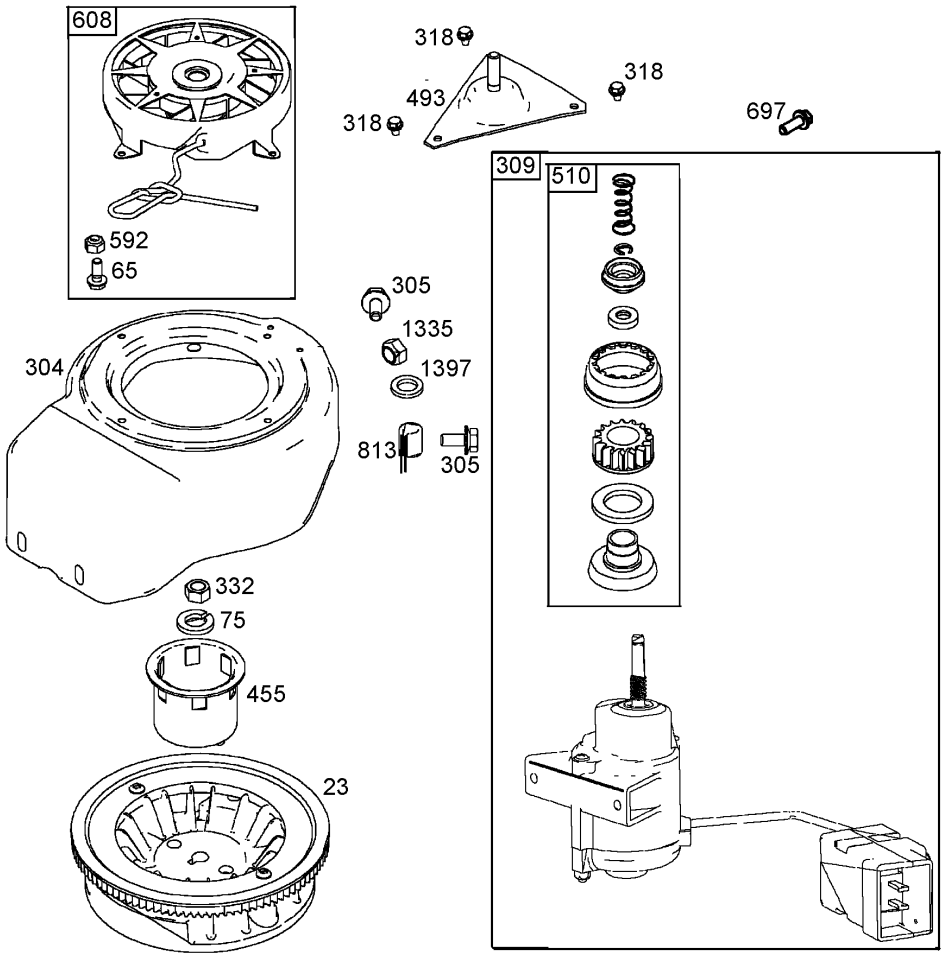

Flywheel, Blower Housing, and Starter Assemblies
Briggs and Stratton 084233-0198-E1

Ref	Part No.	Qty.	Description
❸23	801246	1	Flywheel
❸65	801243	1	Screw
❸75	801237	1	Washer
❸304	801236	1	Housing-Blower
❸305	801239	1	Screw (Blower Housing)
❸309	801247	1	Motor-Starter
❸318	801241	1	Screw
❸332	801238	1	Nut
❸455	801235	1	Cup-Flywheel
❸493	801240	1	Bracket-Mounting
❸510	801293	1	Drive-Starter
❸592	801244	1	Nut
❸608	801242	1	Starter-Rewind
❸697	801248	1	Screw (Starter Motor)
❸813	801249	1	Clamp
❸1335	801269	1	Nut (Blower Housing)
❸1397	801270	1	Washer


TORO®