Form Number 3329-948 Rev B

CCR™ 2450 GTS® Snowthrower

Model No. 38516 - 240000001 and up.

Parts Catalog

Ordering Replacement Parts

To order replacement parts, please supply the part number, the quantity, and the description of each part desired.

Understanding Reference Numbers

Each Identified part in an illustration has a reference number. The reference number for a part also appears in the parts list, along with other information about the part.

This catalog uses two special reference number formats, one to indicate parts in a service assembly and another to indicate the quantity of a given part in an illustration.

Service Assembly Reference Numbers

Parts in service assemblies have reference numbers in the form a:b. The a represents the reference number of the entire service assembly and the b represents a sequential number unique to each part within the service assembly.

For example, a wheel assembly might be identified by reference number 6, the tire by 6:1, the valve by 6:2, and the wheel by 6:3. When you order the assembly identified by reference number 6, you receive all parts identified by reference numbers 6:1, 6:2, and 6:3. However, you may also order any part individually. Reference numbers of this type appear in illustrations and in part lists.

Reference Numbers Indicating Quantity

In an illustration, if a reference number indicates more than one part, the reference number has the form nX y. The n represents the quantity of the part, the X is the multiplication symbol, and the y represents the reference number.

For example, in an illustration, the reference number 2X 37 means that two of the parts identified by reference number 37 are indicated.

© The Toro Company - 2006
All Rights Reserved

Register your product at www.Toro.com

Contents

Description	Page
Housing and Side Plate Assembly	3
Impeller Drive Assembly	4
Chute Assembly	5
Impeller Assembly	6
Upper Shroud Assembly No. 106-4731	7
Engine and Frame Assembly	8
Upper Shroud and Control Panel Assembly	9
Handle Assembly	10
Upper Shroud Assembly No. 106-4732	11
Cylinder, Piston, and Connecting Rod Assemblies Briggs and Stratton 084133-0196-E1	12
Muffler, Carburetor, and Intake Manifold Assemblies Briggs and Stratton 084133-0196-E1	13
Flywheel, Blower Housing, and Starter Assemblies Briggs and Stratton 084133-0196-E1	14

Part Description Abbreviations

Part descriptions in this catalog may include the following abbreviations.

AR	as required
ASM	assembly
BBC	blade brake clutch
CARR	carriage
DEG	degrees
EXT	external
FH	flat head
GA	gauge
HF	hex flange
HH	hex head
HHF	hex head flange
HHFTF	hex head flange thread forming
HJ	hex jam
HLH	hex lag head
HOC	height-of-cut
HSBH	hex socket button head
HSFH	hex socket flat head
HSH	hex socket head
HWH	hex washer head
HWHTF	hex washer head thread forming
HYD	hydraulic
INC	incorporated
LH	left hand
NI	nylon insert
NPTF	national pipe thread fine
PFH	phillips flat head
PPH	phillips pan head
PPHTF	phillips pan head thread forming
PRH	phillips round head
PTH	phillips truss head
PTO	power-take-off
RH	right hand
ROPS	roll-over-protection-system
SFH	slotted fillister head
SHH	slotted hex head
SHWH	slotted hex washer head
SPH	slotted pan head
SQH	square head
SRH	slotted round head
STD	standard
TAP	self tapping
TTH	torx truss head

Footnotes

❶ Not serviced separately

❷ Obtain from your local Briggs & Stratton dealer

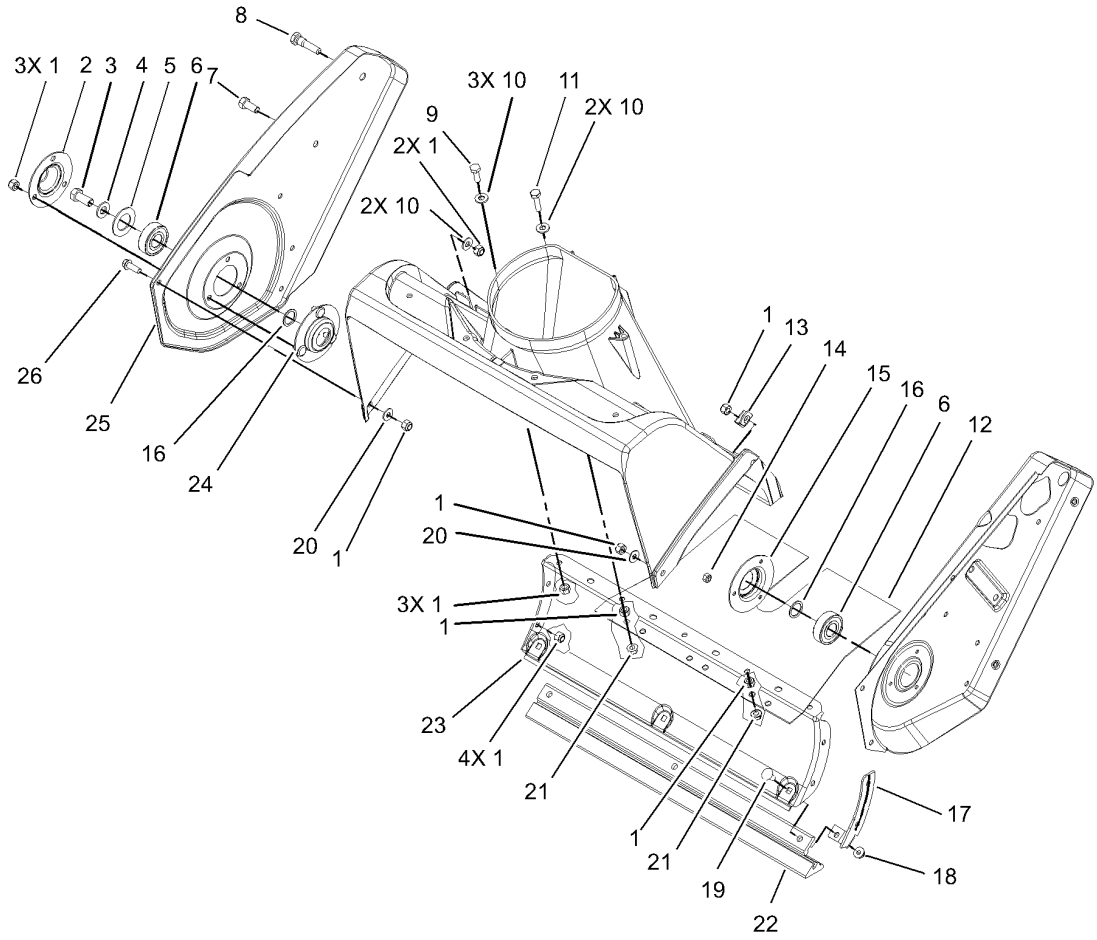

Housing and Side Plate Assembly

Ref	Part No.	Qty.	Description
1	3296-42	17	Nut-Lock, NI
2	52-7290-03	1	Retainer-Bearing
3	3234-25	1	Screw-HHF
4	3256-24	1	Washer-Flat
5	52-7270	1	Washer-Rubber
6	100-1048	2	Bearing-Ball
7	322-43	1	Screw-HH
8	38-8211	1	Pin-Rotor
9	321-4	3	Screw-HH
10	3256-22	7	Washer-Flat
11	321-6	2	Screw-HH
12	55-9512	1	Cover-Bottom
13	55-9430	1	Bracket-Housing
14	3296-2	3	Nut-Lock
15	38-8620	1	Flange-Bearing
16	52-7280	2	Washer-Thrust
17	56-2610	1	Bracket-Housing, Lower
18	32149-2	3	Nut-Keps
19	3229-11	3	Screw-CARR
20	3256-1	2	Washer-Flat
21	32128-10	2	Nut-Lock, HHF
22	55-8760	1	Scraper
23	105-1967-03	1	Housing-Lower
24	52-9110	1	Flange-Bearing

Ref	Part No.	Qty.	Description
25	105-1952-03	1	Sideplate-Right
26	32105-15	5	Screw

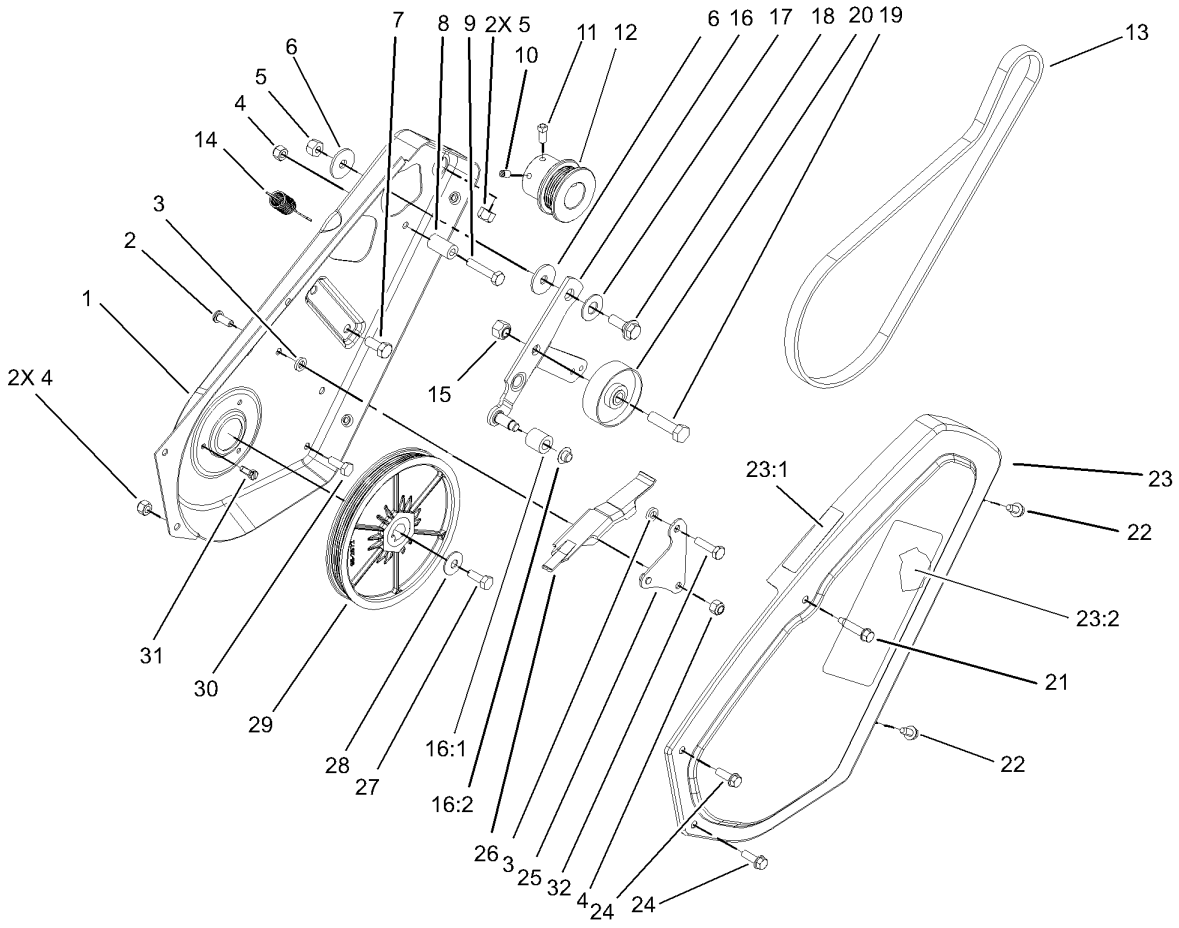

Impeller Drive Assembly

Ref	Part No.	Qty.	Description
1	55-8851-03	1	Plate-Side, LH
2	3274-31	1	Screw-HSBH
3	55-9620	2	Spacer-Plate, Pivot
4	3296-42	4	Nut-Lock, NI
5	3296-29	3	Nut-Lock, NI
6	5-4460	2	Washer-Pivot
7	322-3	2	Screw-HH
8	55-9530	1	Sleeve-Guide, Belt
9	321-13	1	Screw-HH
10	3245-41	1	Screw-HSH
11	3241-7	1	Screw-SQH
12	95-2673	1	Pulley-Engine
13	95-6151	1	Belt-Drive
14	55-9280	1	Spring-Extension
15	32152-2	1	Nut-Lock, Cone
16	105-3542	1	Idler Arm ASM
16:1	55-9520	1	Roller-Brake
16:2	32112-11	1	Nut-Push
17	25-5640	1	Washer
18	27-0410	1	Screw-Shoulder
19	323-29	1	Screw-HH
20	55-9290	1	Pulley-Idler
21	36-3860	1	Screw-HWH, TAP
22	12-3270	2	Screw

Ref	Part No.	Qty.	Description
23	105-1997	1	Cover-Drive
23:1	104-2767	1	Decal-Warning
23:2	60-9480	1	Decal
24	32105-15	2	Screw
25	55-9570	1	Pivot Plate ASM
26	55-9550	1	Brake-Arm
27	321-30	1	Screw-HH
28	3290-456	1	Washer-Belleville
29	95-2672	1	Pulley Rotor ASM
30	321-4	2	Screw-HH
31	32105-8	3	Screw-SHH
32	321-6	1	Screw-HH

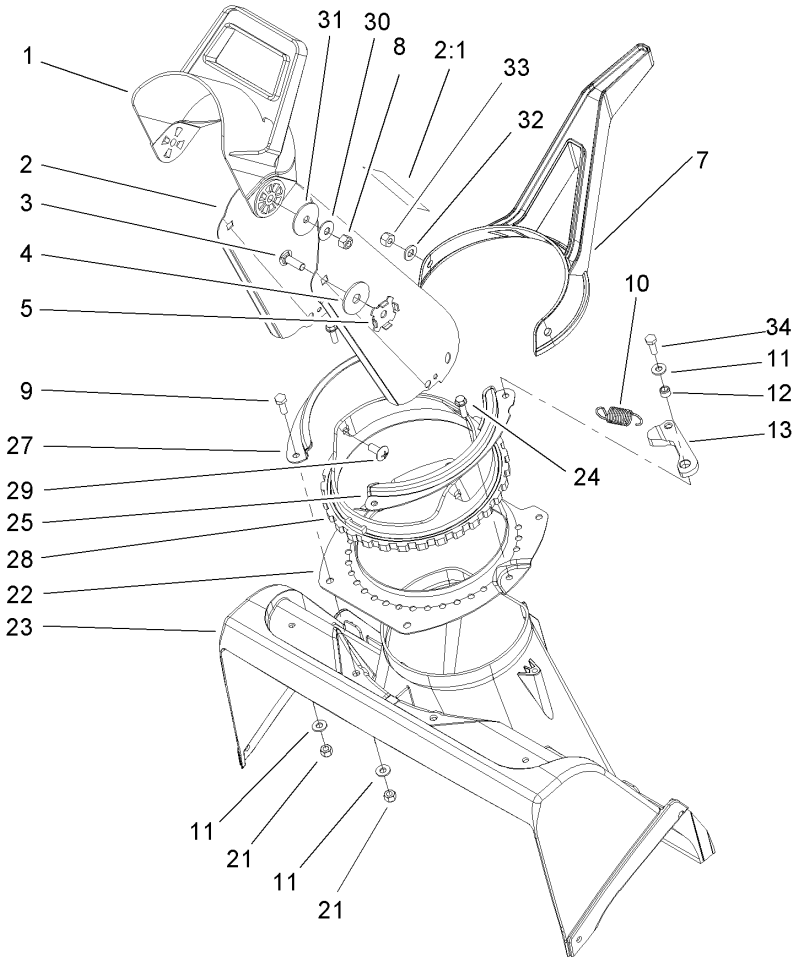

Chute Assembly

Ref	Part No.	Qty.	Description
1	56-2680	1	Chute-Deflector
2	104-4115	1	Chute ASM
2:1	104-4135	1	Decal-Danger
3	3230-22	2	Screw-CARR
4	20-4320	2	Washer-Rubber
5	55-8950	2	Plate-Friction
7	94-9914	1	Handle-Control, Chute
8	3296-29	2	Nut-Lock, NI
9	321-4	3	Screw-HH
10	80-4600	1	Spring-Extension
11	3256-22	5	Washer-Flat
12	55-9370	1	Spacer-Blade, Rotor
13	80-4610	1	Detent
21	3296-42	6	Nut-Lock, NI
22	55-8921-03	1	Ring-Support, Chute
23	105-1950	1	Housing-Rotor, Upper
24	46-8091	2	Screw-HWH
25	71-4980-03	1	Retainer-Chute, LH
27	71-4990-03	1	Retainer-Chute, RH
28	104-2763	1	Ring-Chute
29	100-5487	3	Screw-PTH
30	3290-456	2	Washer-Belleville
31	3256-68	2	Washer-Flat
32	3256-70	3	Washer-Flat

Ref	Part No.	Qty.	Description
33	3296-47	3	Nut-Lock, NI
34	321-6	1	Screw-HH

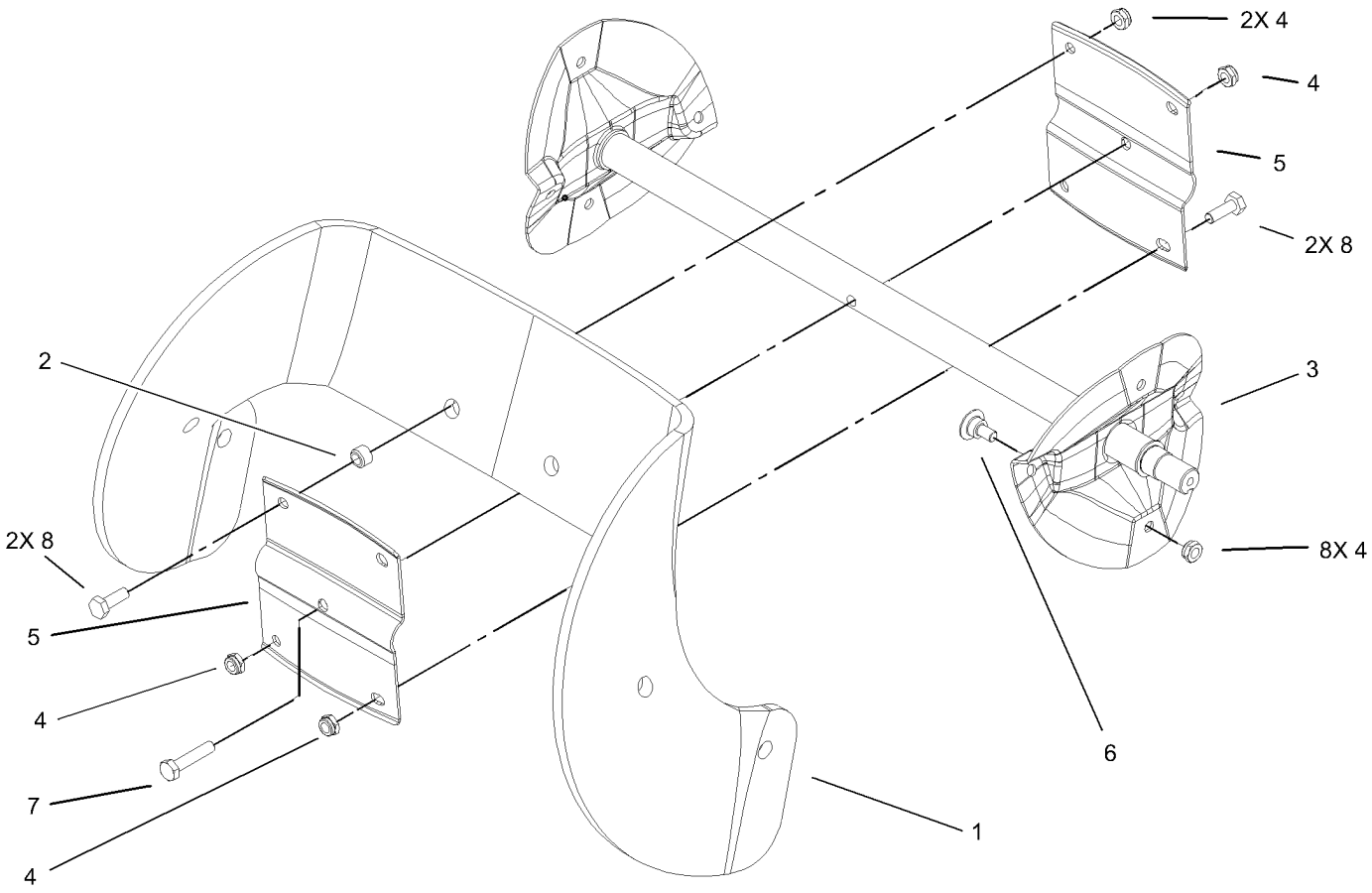

Impeller Assembly

Ref	Part No.	Qty.	Description
1	99-9313	2	Blade-Rotor
2	55-9370	4	Spacer-Blade, Rotor
3	100-5478-03	1	Rotor ASM
4	3296-56	13	Nut-Lock, NI
5	66-6600-03	2	Half-Rotor
6	84-1971	8	Screw
7	321-8	1	Screw-HH
8	321-4	4	Screw-HH

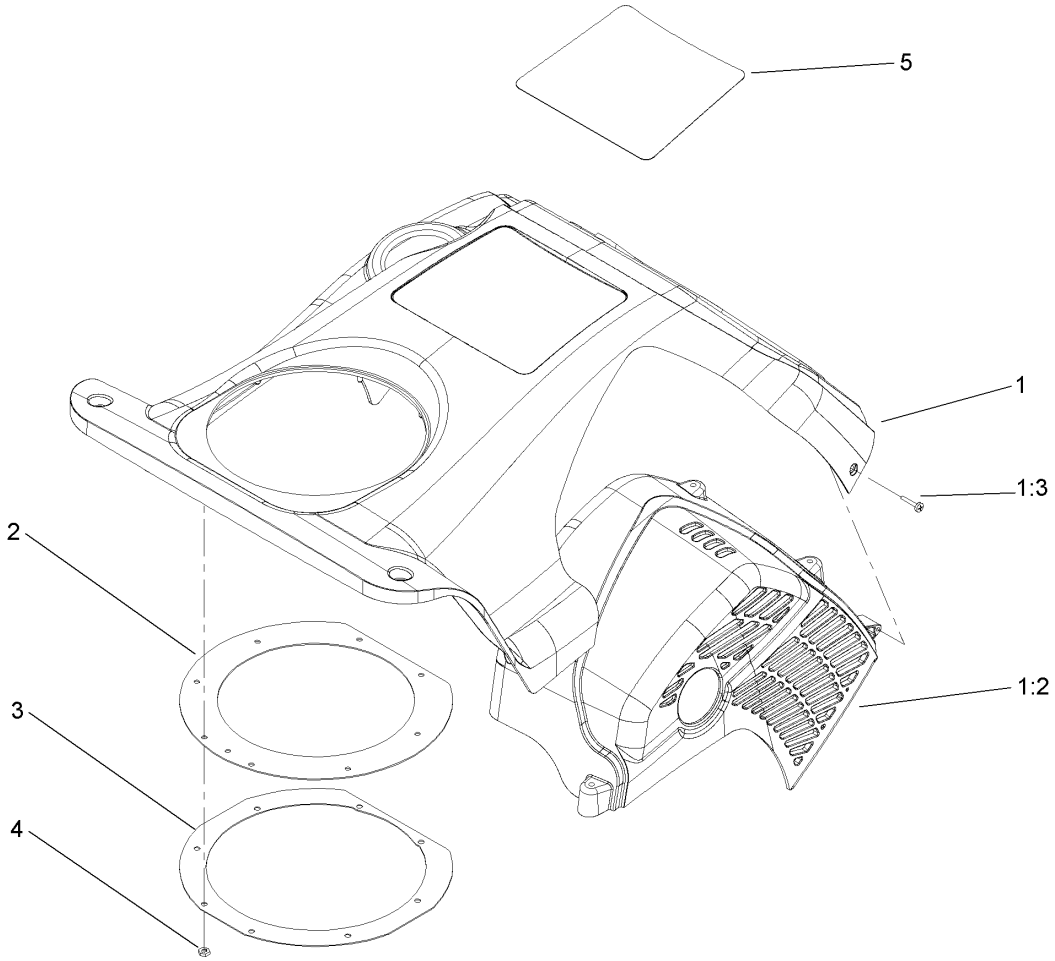

Upper Shroud Assembly No. 106-4731

Ref	Part No.	Qty.	Description
❶1		1	Shroud-Upper
1:2	105-1956	1	Shield-Heat
1:3	94-4496	5	Screw-PPH
2	105-3543	1	Seal-Chute
3	55-9540-03	1	Retainer-Seal, Chute
4	3290-474	8	Palnut
5	106-4720	1	Decal

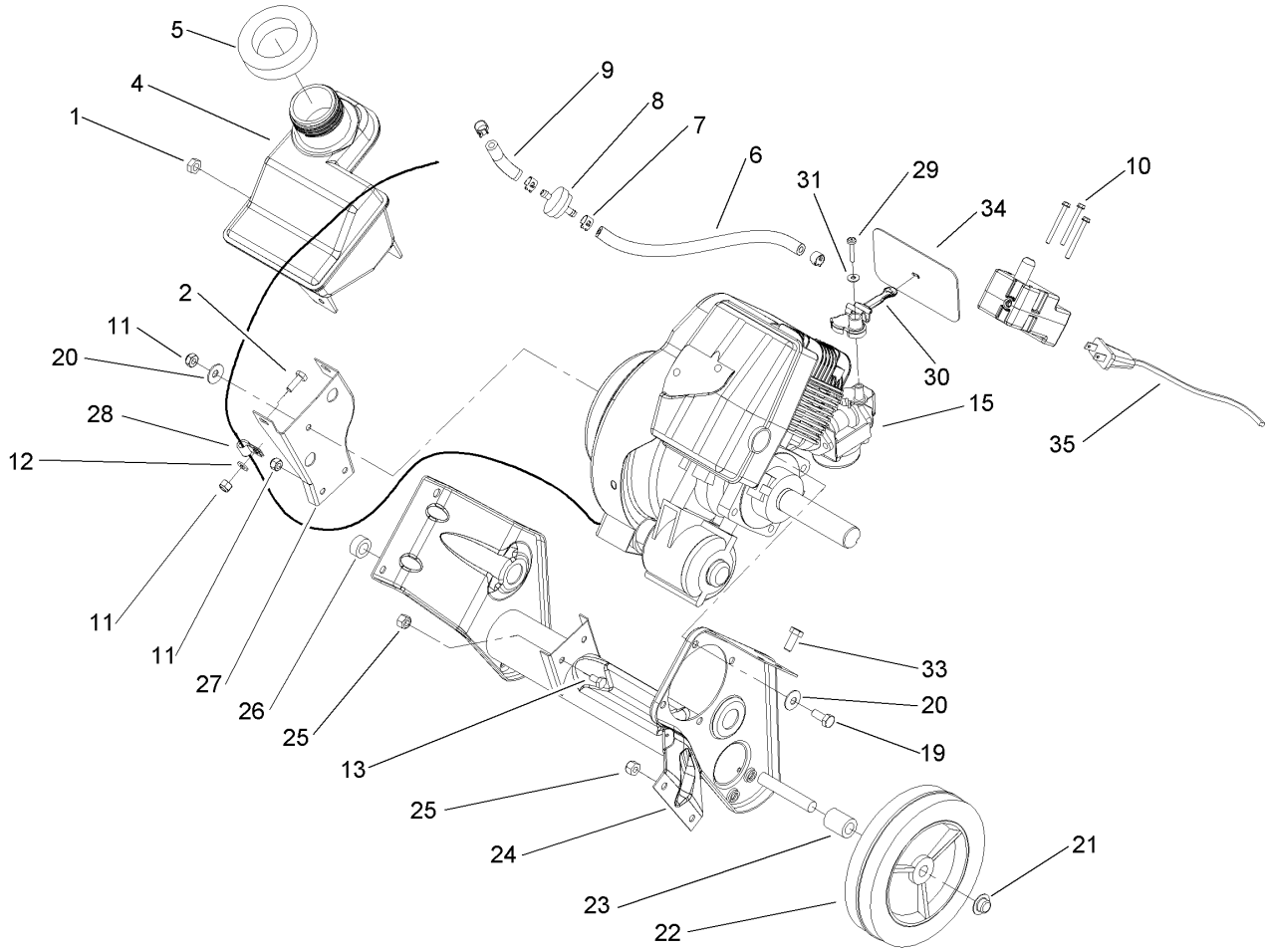

Engine and Frame Assembly

Ref	Part No.	Qty.	Description
1	32152-8	1	Nut-Lock, Cone
2	321-4	2	Screw-HH
4	105-8952	1	Tank-Gas
5	55-9310	1	Seal-Foam
6	49-2482	1	Line-Fuel
7	2412-98	4	Clamp
8	56-6360	1	Filter-Fuel
9	94-9932	1	Hose-Fuel
10	32144-27	3	Screw
11	3296-42	5	Nut-Lock, NI
12	3256-22	2	Washer-Flat
13	321-2	2	Screw-HH
❶❷15		1	Engine-Briggs And Stratton, 084133-0196-E1
19	322-3	4	Screw-HH
20	3290-456	5	Washer-Belleville
21	32112-14	2	Nut-Push
22	66-6510	2	Wheel
23	66-6501	1	Spacer-Wheel
24	105-1965-03	1	Frame
25	3296-29	3	Nut-Lock, NI
26	66-6500	1	Spacer-Wheel
27	105-1968-03	1	Bracket-Support, Recoil
28	2412-91	1	Clamp

Ref	Part No.	Qty.	Description
29	32144-97	1	Screw-PPH, Plastite
30	104-0878	1	Lever-Choke
31	3256-14	1	Washer-Flat
33	322-43	2	Screw-HH
34	106-4738	1	Shield-Hole, Choke
35	106-4741	1	Cord-Electric

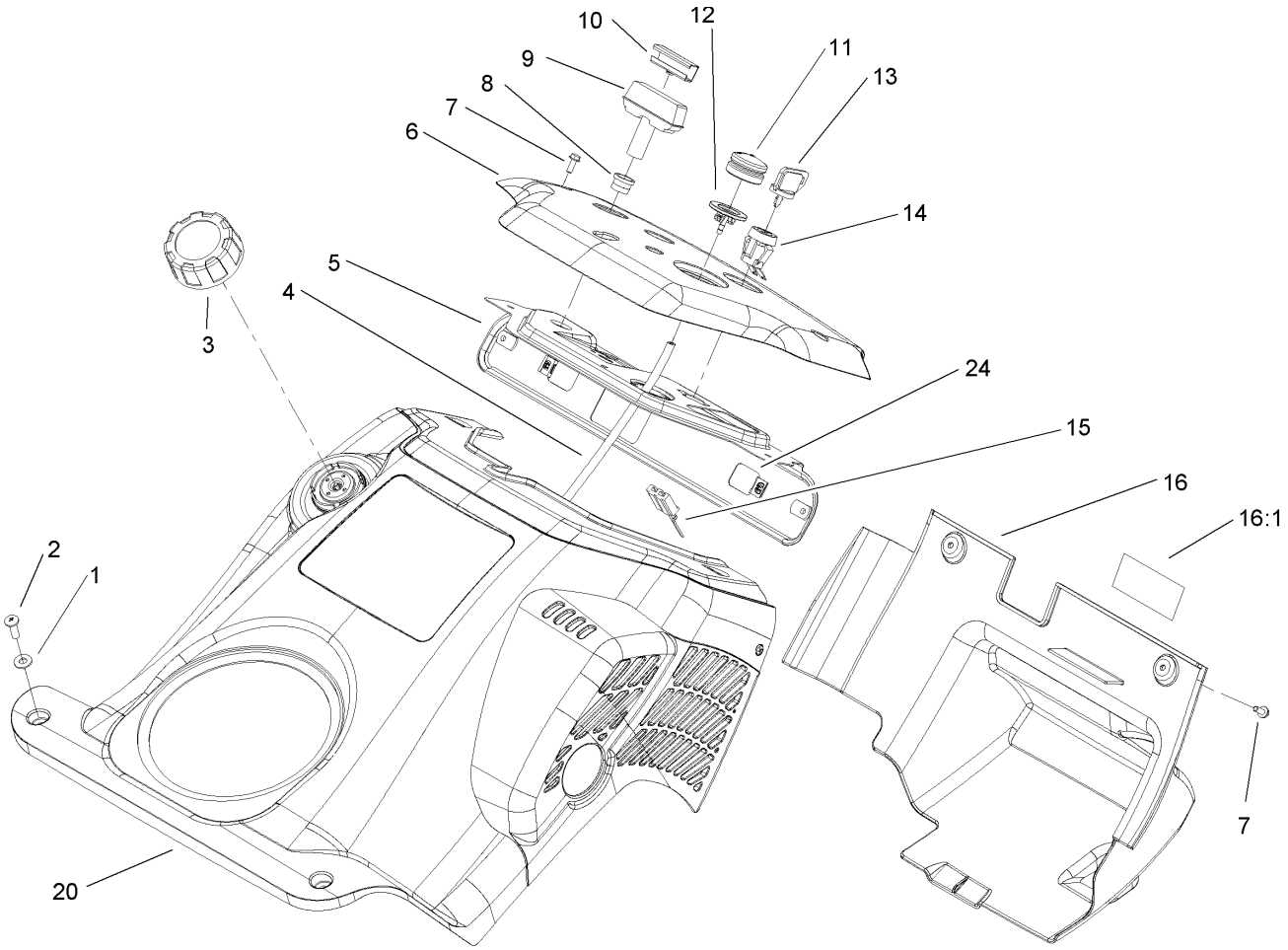

Upper Shroud and Control Panel Assembly

Ref	Part No.	Qty.	Description
1	3256-22	2	Washer-Flat
2	3250-32	2	Screw-PPH
3	104-4133	1	Gas Cap ASM
4	98-1372	1	Hose-Primer
5	105-1999-03	1	Panel-Support, Control
6	105-3523	1	Panel-Control
7	32144-112	5	Screw-HWH
8	55-9410	1	Guide-Rope, Starter
9	612825	1	Handle-Start
10	612824	1	Clip-Starter
11	66-7460	1	Bulb-Primer
12	44-2750	1	Body-Primer
13	63-8360	1	Key-Ignition
14	40-5940	1	Switch
15	218-532	1	Connector-Body
16	105-1995	1	Shroud-Lower W/Decal
16:1	61-4790	1	Decal
20	106-4732	1	Upper Shroud ASM
24	100-9889	2	Nut-Speed

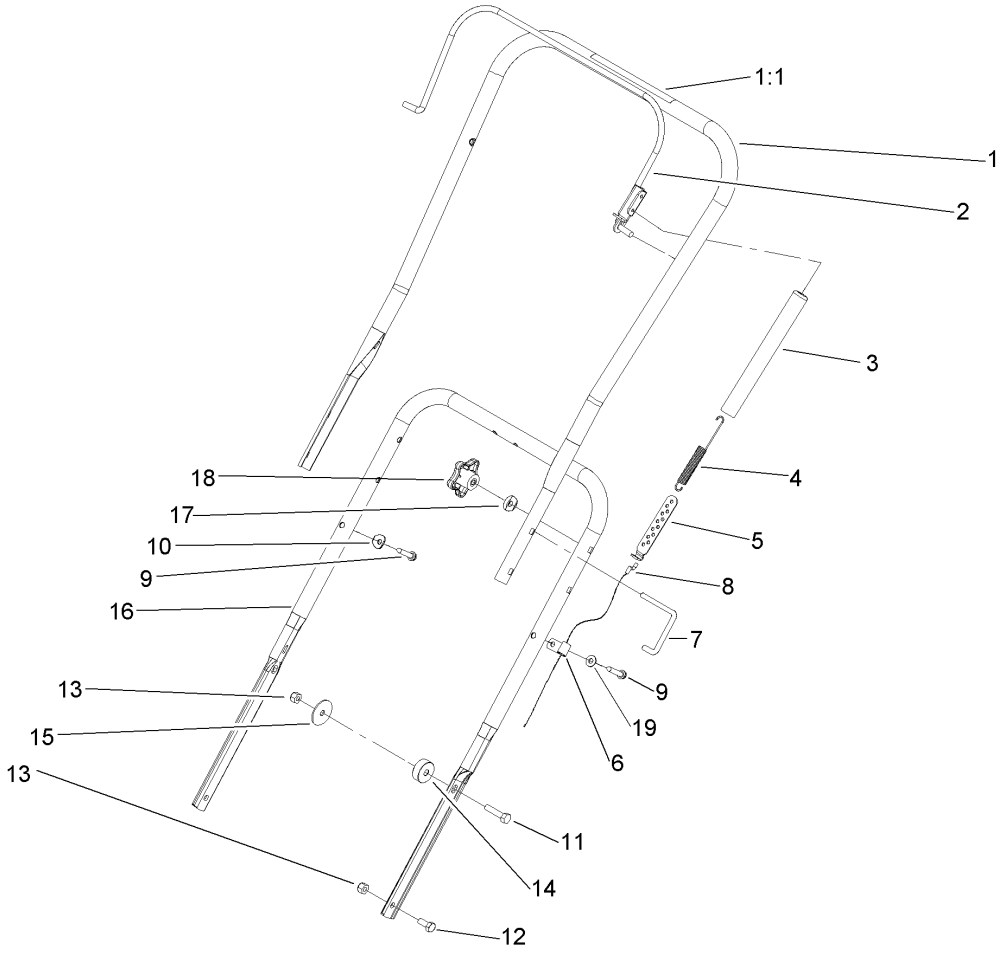

Handle Assembly

Ref	Part No.	Qty.	Description
1	95-2667	1	Handle-Upper
1:1	104-2775	1	Decal-Drive, Rotor
2	71-5120-03	1	Bail ASM
3	71-5530	1	Cover-Spring
4	71-5480	1	Spring-Clutch
5	55-9380	1	Adjuster-Cable
6	2412-91	1	Clamp
7	98-2266	2	Lock-Handle
8	94-9922	1	Cable-Clutch
9	61-8640	2	Screw
10	3-7501	1	Washer
11	322-6	2	Screw-HH
12	322-3	2	Screw-HH
13	3296-29	4	Nut-Lock, NI
14	105-1961	2	Spacer
15	3256-68	2	Washer-Flat
16	55-9121-03	1	Handle-Lower
17	75-9130	2	Washer-Curved
18	106-4161	2	Knob-Handle
19	3256-22	1	Washer-Flat

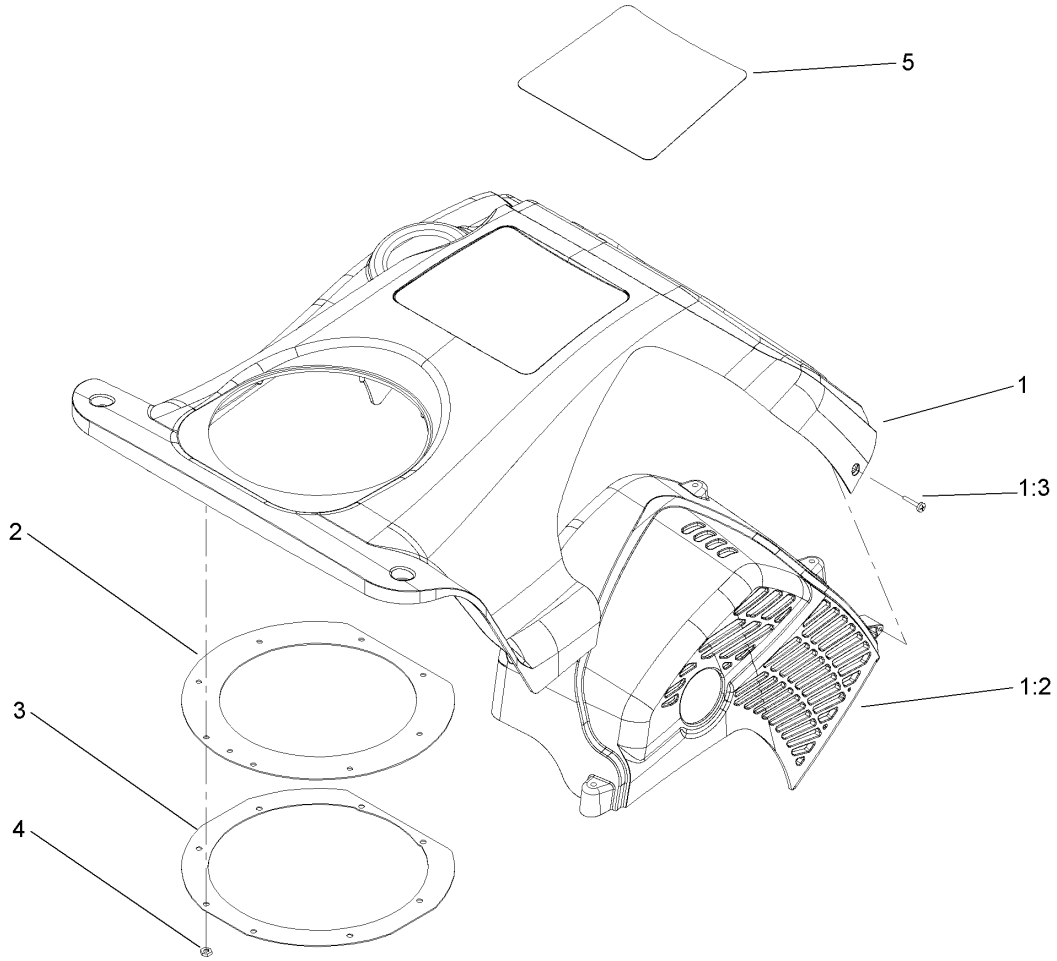

Upper Shroud Assembly No. 106-4732

Ref	Part No.	Qty.	Description
❶1		1	Shroud-Upper
1:2	105-1956	1	Shield-Heat
1:3	94-4496	5	Screw-PPH
2	105-3543	1	Seal-Chute
3	55-9540-03	1	Retainer-Seal, Chute
4	3290-474	8	Palnut
5	106-4720	1	Decal

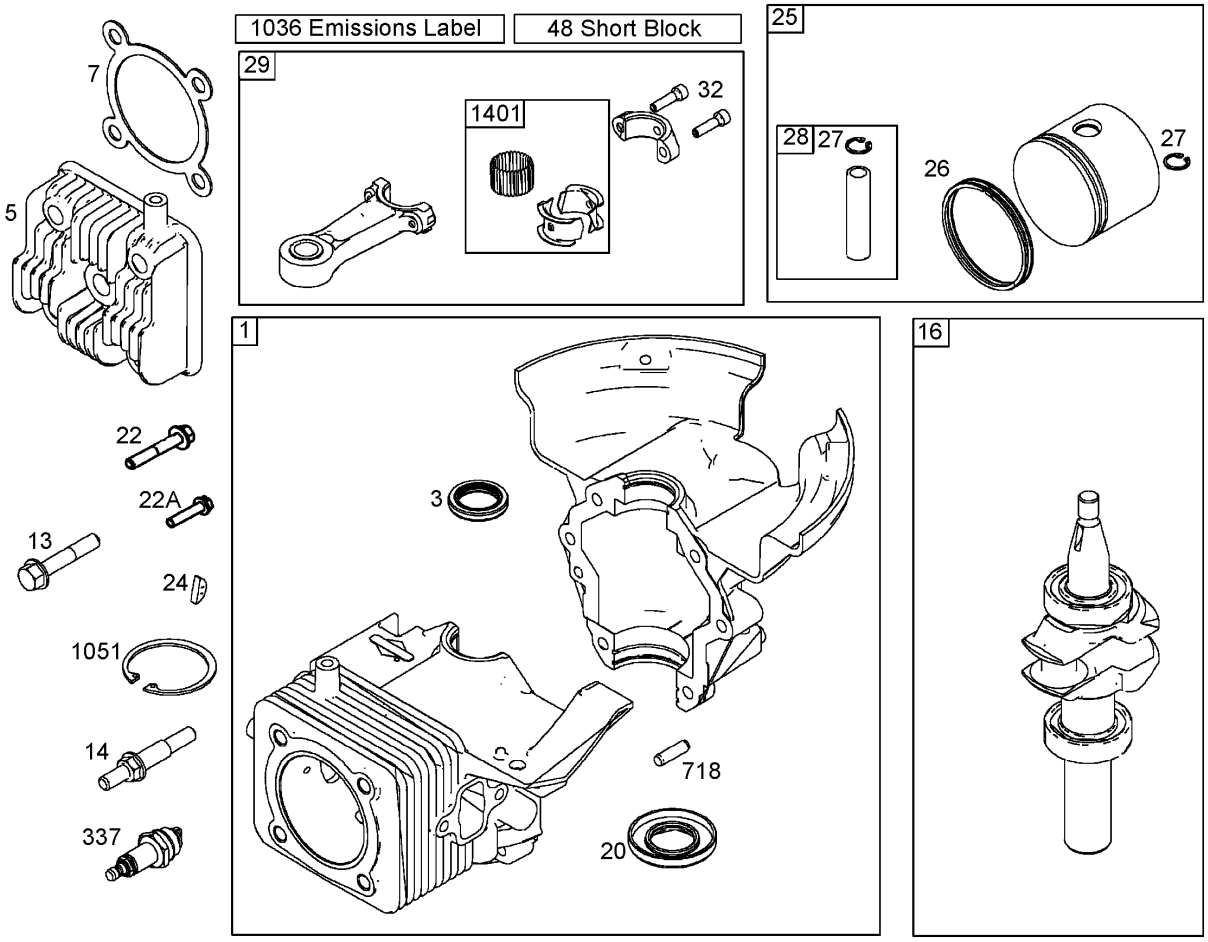

Cylinder, Piston, and Connecting Rod Assemblies
Briggs and Stratton 084133-0196-E1

Ref	Part No.	Qty.	Description
❷1	801322	1	Cylinder ASM
❷3	801262	1	Seal-Oil
❷5	801283	1	Head-Cylinder
❷7	801263	1	Gasket-Head, Cylinder
❷13	801264	1	Screw (Cylinder Head)
❷14	801265	1	Stud (Cylinder Head)
❷16	801220	1	Crankshaft
❷20	801261	1	Seal-Oil
❷22	801266	1	Screw (Crankcase And Cover Sump)
❷22A	801271	1	Screw (Crankcase And Cover Sump)
❷24	801234	1	Key-Flywheel
❷25	801279	1	Piston ASM
❷26	801280	1	Ring Set
❷27	801275	1	Lock-Pin, Piston
❷28	801276	1	Pin-Piston
❷29	801277	1	Rod-Connecting
❷32	801278	1	Screw
❷48	801285	1	Short Block
❷337	801254	1	Plug-Spark
❷718	690959	1	Pin-Locating
❷1036	801294	1	Label-Emissions
❷1051	801274	1	Ring-Retaining

Ref	Part No.	Qty.	Description
❷1401	801290	1	Roller-Strip

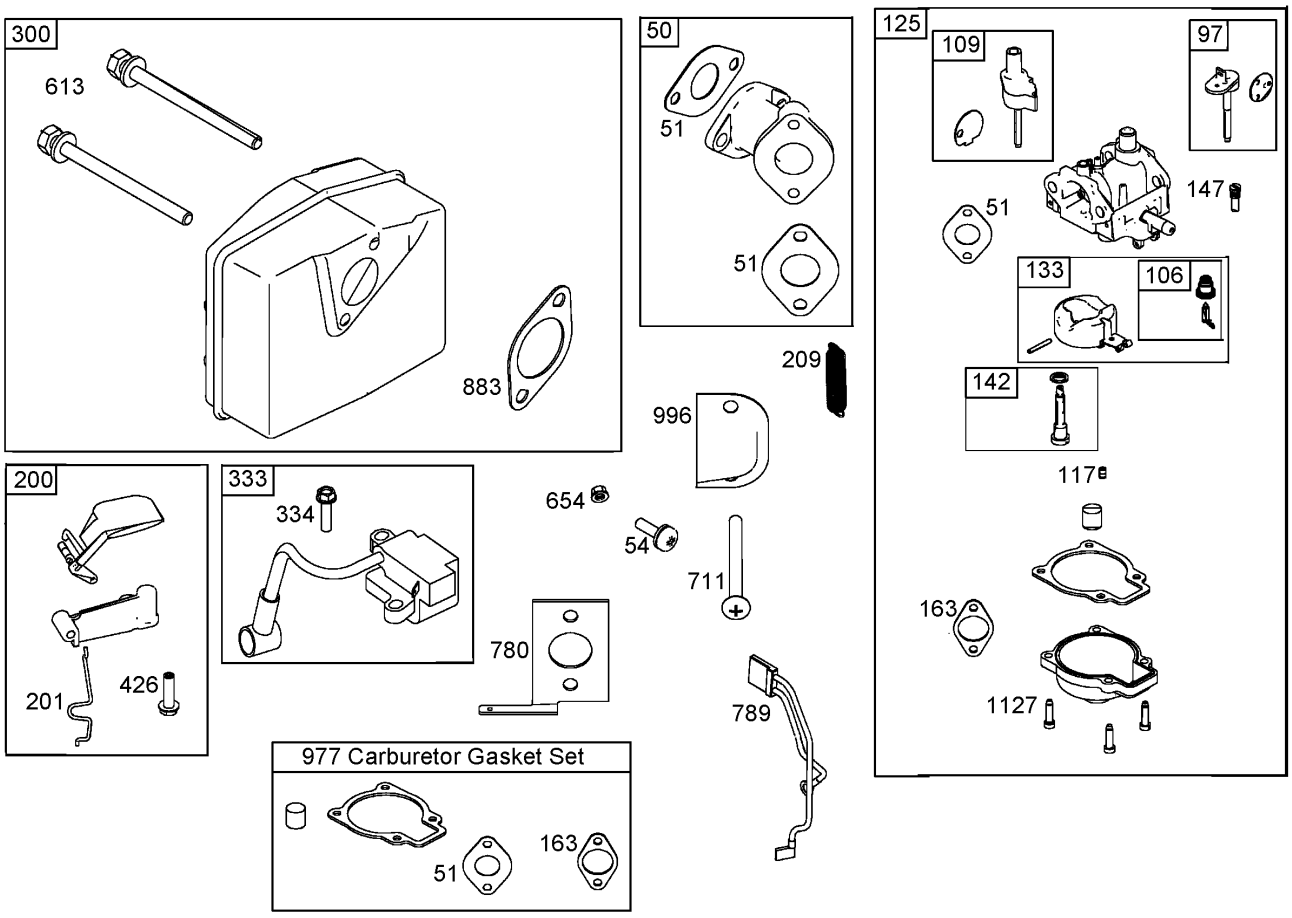

Muffler, Carburetor, and Intake Manifold Assemblies
Briggs and Stratton 084133-0196-E1

Ref	Part No.	Qty.	Description
❷50	801232	1	Manifold-Intake
❷51	801224	1	Gasket-Intake
❷54	801230	1	Screw (Intake Manifold)
❷97	801306	1	Shaft-Throttle
❷106	801317	1	Seat-Inlet
❷109	801307	1	Shaft-Choke
❷117	801310	1	Jet-Main
❷125	801233	1	Carburetor
❷133	801316	1	Float-Carburetor
❷142	801313	1	Nozzle-Carburetor
❷147	801308	1	Jet-Pilot
❷163	801227	1	Gasket-Cleaner, Air
❷200	801289	1	Blade-Governor
❷201	801225	1	Link-Vane, Air
❷209	801223	1	Spring-Governor
❷300	801250	1	Muffler
❷333	801268	1	Armature-Magneto
❷334	801267	1	Screw
❷426	801231	1	Screw
❷613	801251	1	Screw
❷654	801324	1	Nut (Intake Manifold) (Used Before Engine Code Date 05042600)
❷711	801229	1	Screw (Starter Motor)

Ref	Part No.	Qty.	Description
❷780	801228	1	Anchor-Spring
❷789	801253	1	Wire ASM
❷883	801252	1	Gasket-Exhaust
❷977	801312	1	Gasket Set-Carburetor
❷996	801226	1	Shield-Carburetor
❷1127	801318	1	Screw

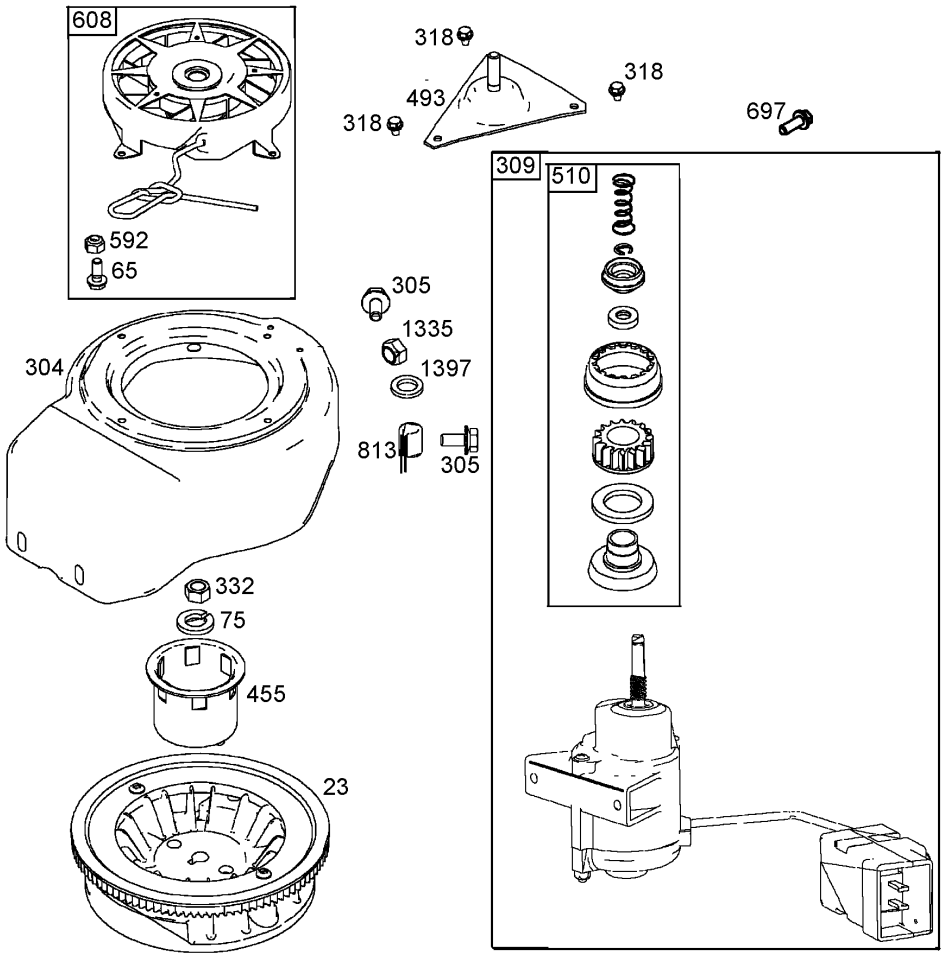

Flywheel, Blower Housing, and Starter Assemblies
Briggs and Stratton 084133-0196-E1

Ref	Part No.	Qty.	Description
❷23	801246	1	Flywheel
❷65	801243	1	Screw
❷75	801237	1	Washer
❷304	801236	1	Housing-Blower
❷305	801239	1	Screw (Blower Housing)
❷309	801247	1	Motor-Starter
❷318	801241	1	Screw
❷332	801238	1	Nut
❷455	801235	1	Cup-Flywheel
❷493	801240	1	Bracket-Mounting
❷510	801293	1	Drive-Starter
❷592	801244	1	Nut
❷608	801242	1	Starter-Rewind
❷697	801248	1	Screw
❷813	801249	1	Clamp
❷1335	801269	1	Nut
❷1397	801270	1	Washer

NOTES


TORO®