Form Number 3329-952 Rev B

CCR™ 3650 GTS® Snowthrower

Model No. 38518 - 240000001 and up.

Parts Catalog

Ordering Replacement Parts

To order replacement parts, please supply the part number, the quantity, and the description of each part desired.

Understanding Reference Numbers

Each Identified part in an illustration has a reference number. The reference number for a part also appears in the parts list, along with other information about the part.

This catalog uses two special reference number formats, one to indicate parts in a service assembly and another to indicate the quantity of a given part in an illustration.

Service Assembly Reference Numbers

Parts in service assemblies have reference numbers in the form a:b. The a represents the reference number of the entire service assembly and the b represents a sequential number unique to each part within the service assembly.

For example, a wheel assembly might be identified by reference number 6, the tire by 6:1, the valve by 6:2, and the wheel by 6:3. When you order the assembly identified by reference number 6, you receive all parts identified by reference numbers 6:1, 6:2, and 6:3. However, you may also order any part individually. Reference numbers of this type appear in illustrations and in part lists.

Reference Numbers Indicating Quantity

In an illustration, if a reference number indicates more than one part, the reference number has the form nX y. The n represents the quantity of the part, the X is the multiplication symbol, and the y represents the reference number.

For example, in an illustration, the reference number 2X 37 means that two of the parts identified by reference number 37 are indicated.

© The Toro Company - 2006
All Rights Reserved

Register your product at www.Toro.com

Contents

Description	Page
Housing and Side Plate Assembly	3
Impeller Drive Assembly	4
Chute Assembly	5
Impeller Assembly	6
Engine and Frame Assembly	7
Upper Shroud and Control Panel Assembly	8
Handle Assembly	9
Cylinder, Piston, and Connecting Rod Assemblies Briggs and Stratton 084233-0198-E1	10
Muffler, Carburetor, and Intake Manifold Assemblies Briggs and Stratton 084233-0198-E1	11
Flywheel, Blower Housing, and Starter Assemblies Briggs and Stratton 084233-0198-E1	12

Part Description Abbreviations

Part descriptions in this catalog may include the following abbreviations.

AR	as required
ASM	assembly
BBC	blade brake clutch
CARR	carriage
DEG	degrees
EXT	external
FH	flat head
GA	gauge
HF	hex flange
HH	hex head
HHF	hex head flange
HHFTF	hex head flange thread forming
HJ	hex jam
HLH	hex lag head
HOC	height-of-cut
HSBH	hex socket button head
HSFH	hex socket flat head
HSH	hex socket head
HWH	hex washer head
HWHTF	hex washer head thread forming
HYD	hydraulic
INC	incorporated
LH	left hand
NI	nylon insert
NPTF	national pipe thread fine
PFH	phillips flat head
PPH	phillips pan head
PPHTF	phillips pan head thread forming
PRH	phillips round head
PTH	phillips truss head
PTO	power-take-off
RH	right hand
ROPS	roll-over-protection-system
SFH	slotted fillister head
SHH	slotted hex head
SHWH	slotted hex washer head
SPH	slotted pan head
SQH	square head
SRH	slotted round head
STD	standard
TAP	self tapping
TTH	torx truss head

Footnotes

❶ Not illustrated

❷ Not serviced separately

❸ Obtain from your local Briggs & Stratton dealer

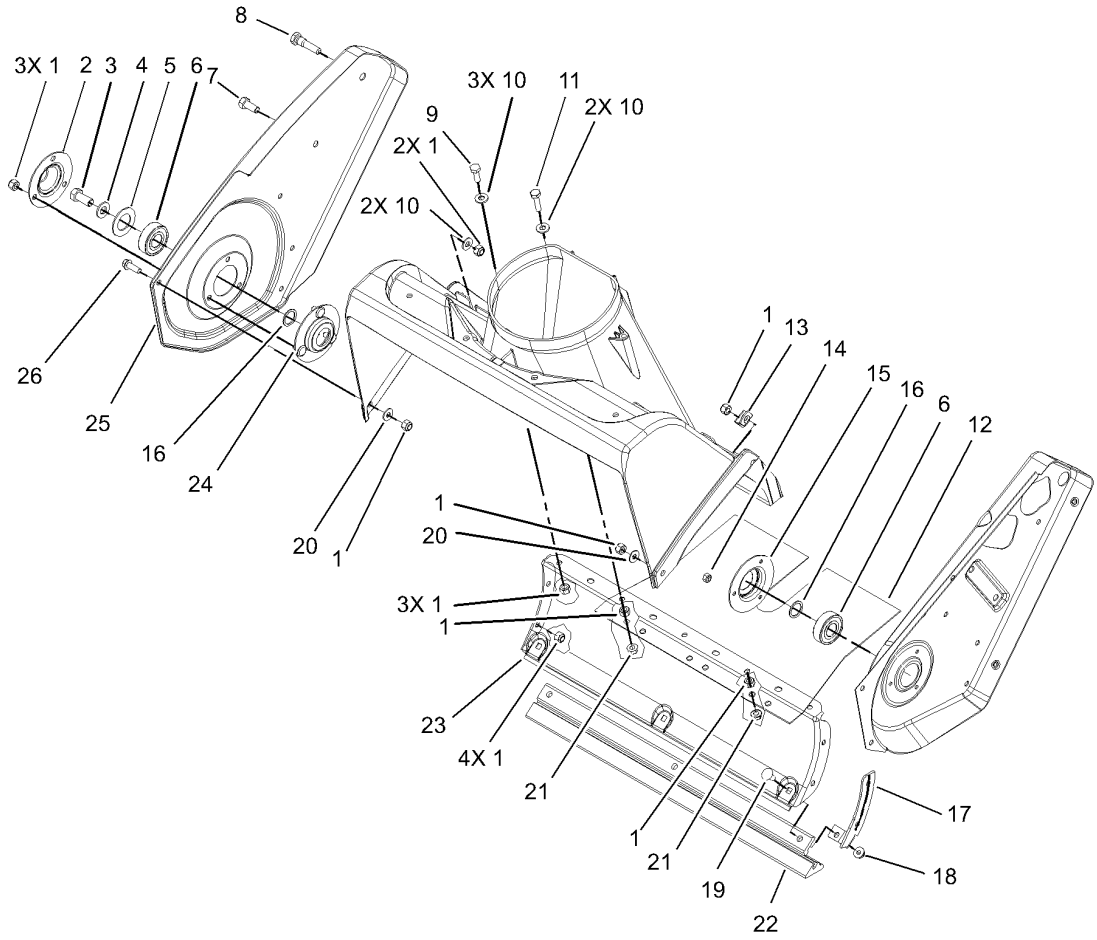

Housing and Side Plate Assembly

Ref	Part No.	Qty.	Description
1	3296-42	17	Nut-Lock, NI
2	52-7290-03	1	Retainer-Bearing
3	3234-25	1	Screw-HHF
4	3256-24	1	Washer-Flat
5	52-7270	1	Washer-Rubber
6	100-1048	2	Bearing-Ball
7	322-43	1	Screw-HH
8	38-8211	1	Pin-Rotor
9	321-4	3	Screw-HH
10	3256-22	7	Washer-Flat
11	321-6	2	Screw-HH
12	55-9512	1	Cover-Bottom
13	55-9430	1	Bracket-Housing
14	3296-2	3	Nut-Lock
15	38-8620	1	Flange-Bearing
16	52-7280	2	Washer-Thrust
17	56-2610	1	Bracket-Housing, Lower
18	32149-2	3	Nut-Keps
19	3229-11	3	Screw-CARR
20	3256-1	2	Washer-Flat
21	32128-10	2	Nut-Lock, HHF
22	55-8760	1	Scraper
23	105-1967-03	1	Housing-Lower
24	52-9110	1	Flange-Bearing

Ref	Part No.	Qty.	Description
25	105-1952-03	1	Sideplate-Right
26	32105-15	5	Screw

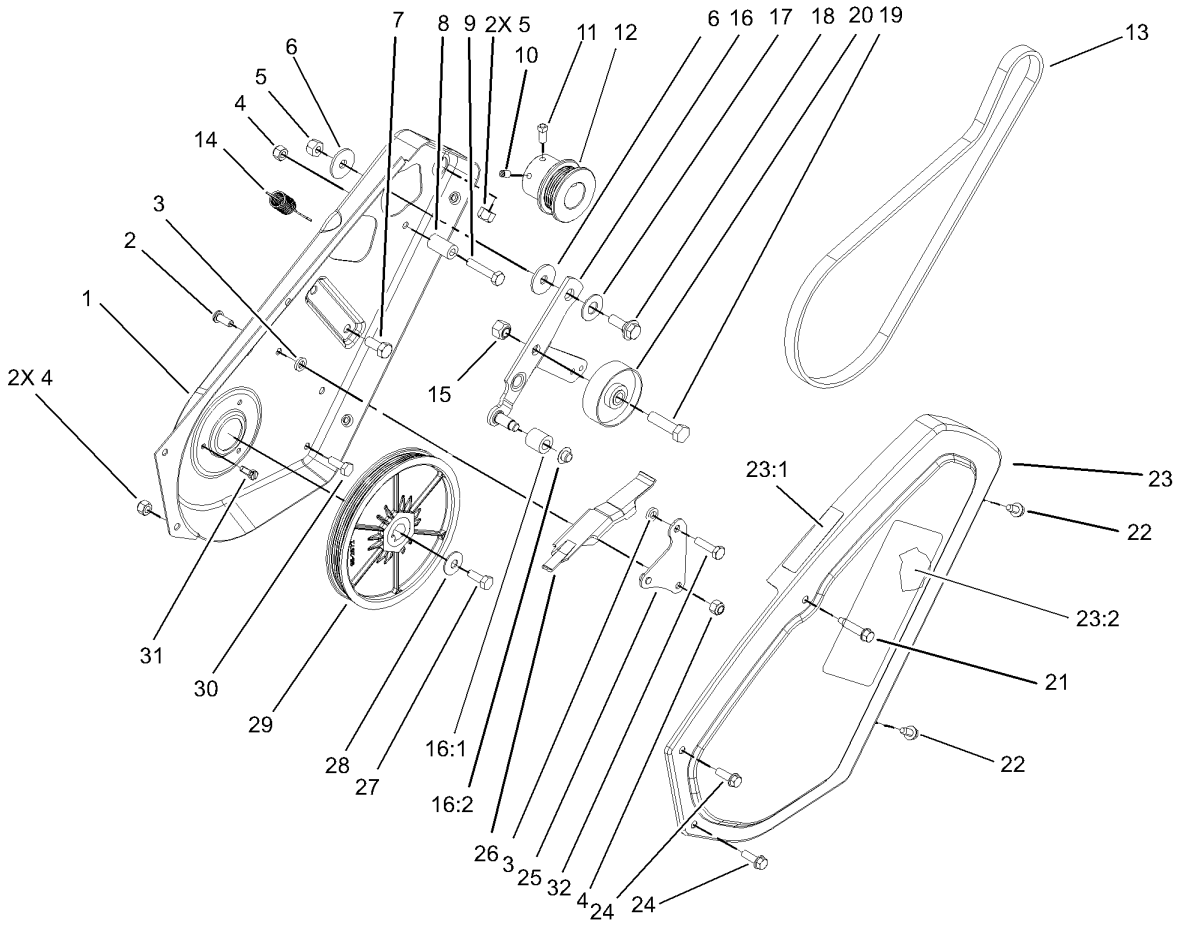

Impeller Drive Assembly

Ref	Part No.	Qty.	Description
1	55-8851-03	1	Plate-Side, LH
2	3274-31	1	Screw-HSBH
3	55-9620	2	Spacer-Plate, Pivot
4	3296-42	4	Nut-Lock, NI
5	3296-29	3	Nut-Lock, NI
6	5-4460	2	Washer-Pivot
7	322-3	2	Screw-HH
8	55-9530	1	Sleeve-Guide, Belt
9	321-13	1	Screw-HH
10	3245-41	1	Screw-HSH
11	3241-7	1	Screw-SQH
12	95-2673	1	Pulley-Engine
13	95-6151	1	Belt-Drive
14	55-9280	1	Spring-Extension
15	32152-2	1	Nut-Lock, Cone
16	105-3542	1	Idler Arm ASM
16:1	55-9520	1	Roller-Brake
16:2	32112-11	1	Nut-Push
17	25-5640	1	Washer
18	27-0410	1	Screw-Shoulder
19	323-29	1	Screw-HH
20	55-9290	1	Pulley-Idler
21	36-3860	1	Screw-HWH, TAP
22	12-3270	2	Screw

Ref	Part No.	Qty.	Description
23	105-1997	1	Cover-Drive
23:1	104-2767	1	Decal-Warning
23:2	60-9480	1	Decal
24	32105-15	2	Screw
25	55-9570	1	Pivot Plate ASM
26	55-9550	1	Brake-Arm
27	321-30	1	Screw-HH
28	3290-456	1	Washer-Belleville
29	95-2672	1	Pulley Rotor ASM
30	321-4	2	Screw-HH
31	32105-8	3	Screw-SHH
32	321-6	1	Screw-HH

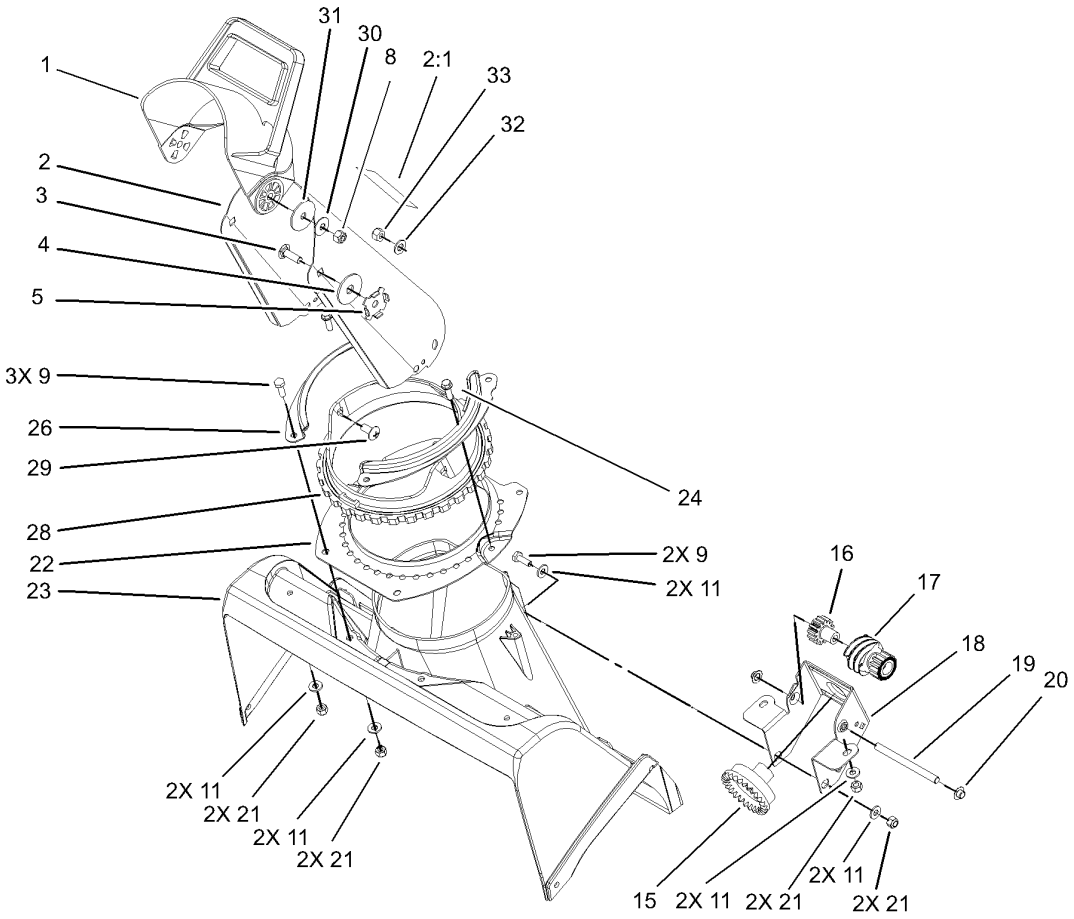

Chute Assembly

Ref	Part No.	Qty.	Description
1	56-2680	1	Chute-Deflector
2	104-4115	1	Chute ASM
2:1	104-4135	1	Decal-Danger
3	3230-22	2	Screw-CARR
4	20-4320	2	Washer-Rubber
5	55-8950	2	Plate-Friction
8	3296-29	2	Nut-Lock, NI
9	321-4	5	Screw-HH
11	3256-22	10	Washer-Flat
15	55-8740	1	Gear-Face
16	55-8750	1	Gear-Spur, Spacer
17	105-3512	1	Gear-Spur/Worm
18	105-3513-03	1	Bracket-Gear, Chute
19	55-9150	1	Shaft-Gear, Worm
20	32112-11	2	Nut-Push
21	3296-42	8	Nut-Lock, NI
22	55-8921-03	1	Ring-Support, Chute
23	105-1950	1	Housing-Rotor, Upper
24	46-8091	2	Screw-HWH
26	55-8910-03	2	Ring-Retainer, Chute
28	55-8720	1	Ring-Gear, Chute
29	100-5486	3	Screw-Truss Hd, Phillips
30	3290-456	2	Washer-Belleville
31	3256-68	2	Washer-Flat

Ref	Part No.	Qty.	Description
32	3256-70	3	Washer-Flat
33	3296-47	3	Nut-Lock, NI

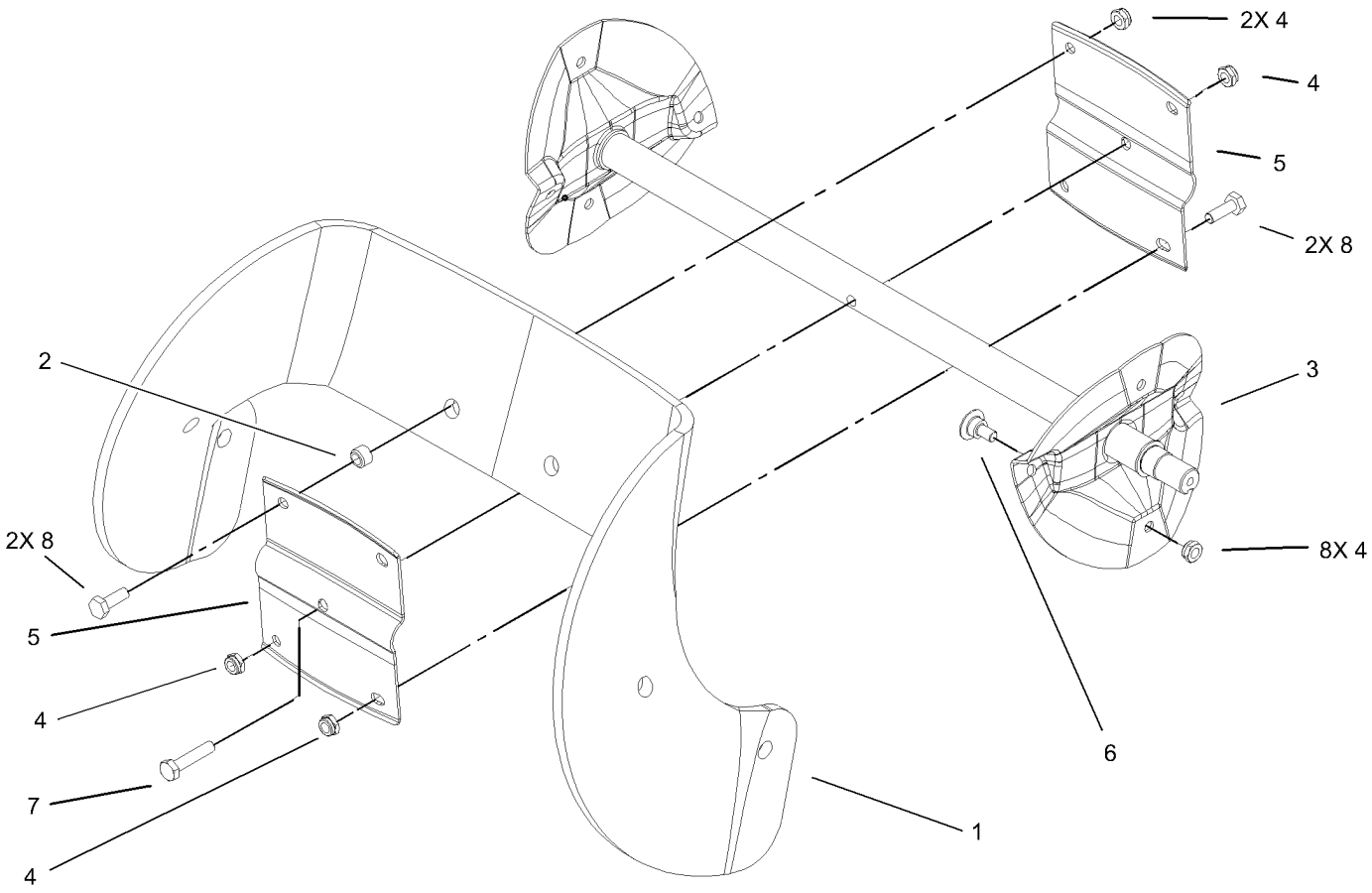

Impeller Assembly

Ref	Part No.	Qty.	Description
1	99-9313	2	Blade-Rotor
2	55-9370	4	Spacer-Blade, Rotor
3	100-5478-03	1	Rotor ASM
4	3296-56	13	Nut-Lock, NI
5	66-6600-03	2	Half-Rotor
6	84-1971	8	Screw
7	321-8	1	Screw-HH
8	321-4	4	Screw-HH

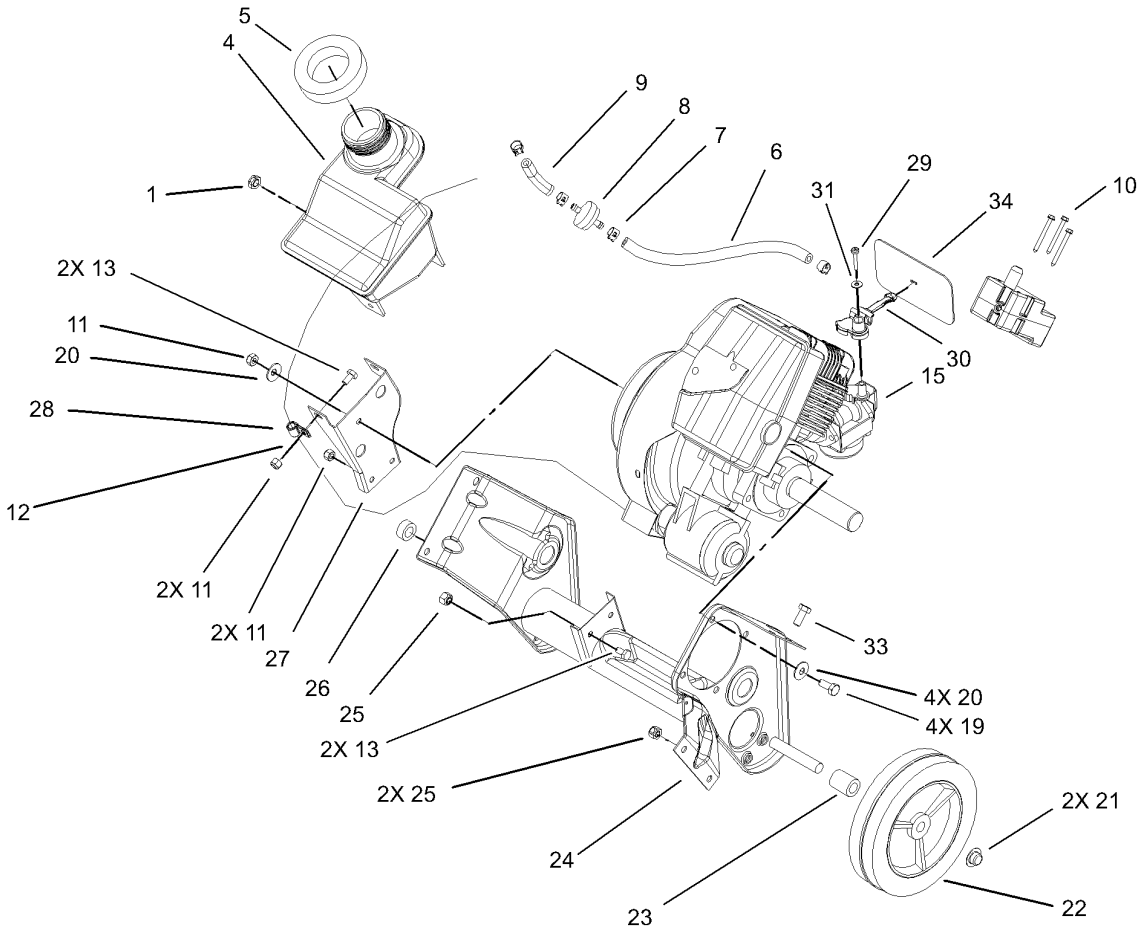

Engine and Frame Assembly

Ref	Part No.	Qty.	Description
1	32152-8	1	Nut-Lock, Cone
4	105-8952	1	Tank-Gas
5	55-9310	1	Seal-Foam
6	49-2482	1	Line-Fuel
7	2412-98	4	Clamp
8	56-6360	1	Filter-Fuel
9	94-9932	1	Hose-Fuel
10	32144-27	3	Screw
11	3296-42	5	Nut-Lock, NI
12	3256-22	2	Washer-Flat
13	321-2	4	Screw-HH
❷❸15		1	Engine-Briggs And Stratton, 084233-0198-E1
19	322-3	4	Screw-HH
20	3290-456	5	Washer-Belleville
21	32112-14	2	Nut-Push
22	66-6510	2	Wheel
23	66-6501	1	Spacer-Wheel
24	105-1965-03	1	Frame
25	3296-29	3	Nut-Lock, NI
26	66-6500	1	Spacer-Wheel
27	105-1968-03	1	Bracket-Support, Recoil
28	2412-91	1	Clamp
29	32144-97	1	Screw-PPH, Plastite

Ref	Part No.	Qty.	Description
30	104-0878	1	Lever-Choke
31	3256-14	1	Washer-Flat
33	322-43	2	Screw-HH
34	106-4738	1	Shield-Hole, Choke
❶	106-4741	1	Cord-Electric

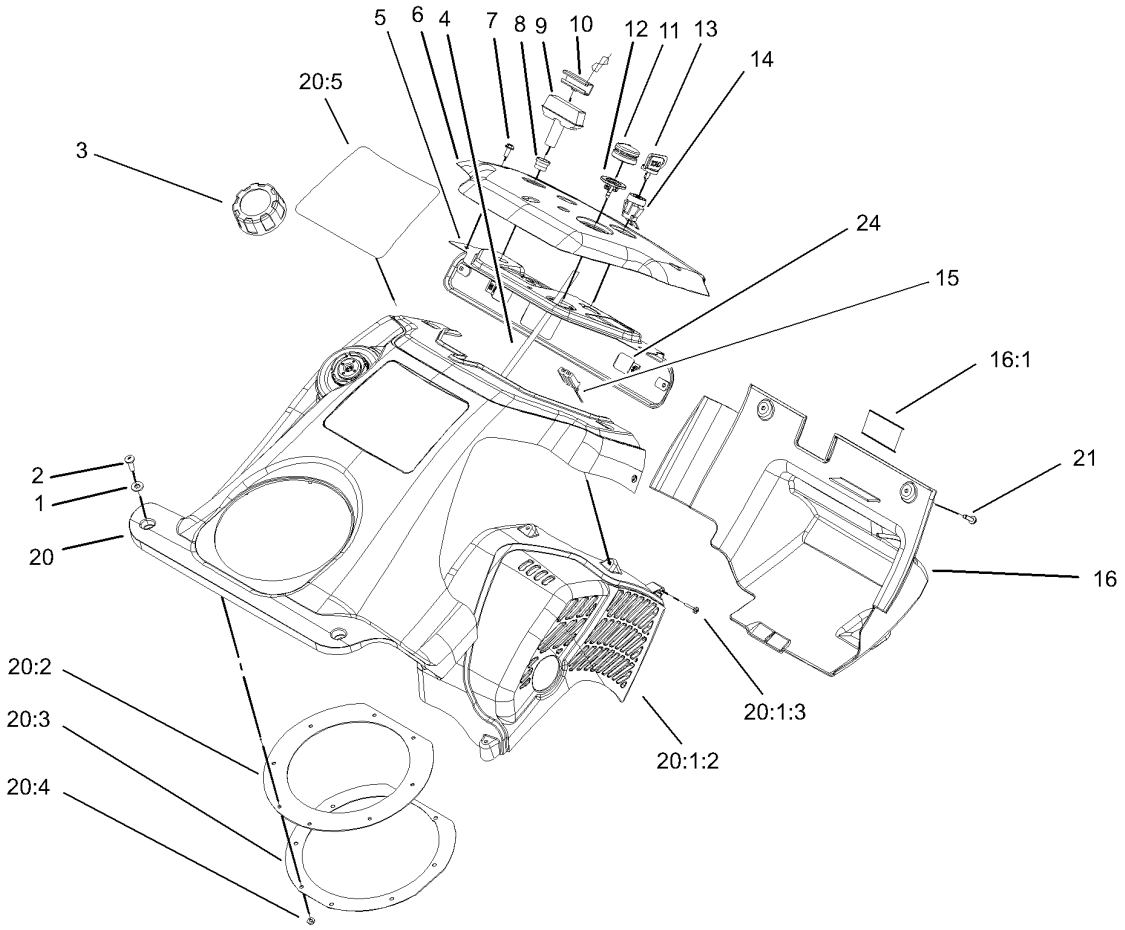

Upper Shroud and Control Panel Assembly

Ref	Part No.	Qty.	Description
1	3256-22	2	Washer-Flat
2	3250-32	2	Screw-PPH
3	104-4133	1	Gas Cap ASM
4	98-1372	1	Hose-Primer
5	105-1999-03	1	Panel-Support, Control
6	105-1954	1	Panel-Control
7	32144-112	3	Screw-HWH
8	55-9410	1	Guide-Rope, Starter
9	612825	1	Handle-Start
10	612824	1	Clip-Starter
11	66-7460	1	Bulb-Primer
12	44-2750	1	Body-Primer
13	63-8360	1	Key-Ignition
14	40-5940	1	Switch
15	218-532	1	Connector-Body
16	105-1995	1	Shroud-Lower W/Decal
16:1	61-4790	1	Decal
20	106-4734	1	Upper Shroud ASM, Es 3650
20:1:2	105-1956	1	Shield-Heat
20:1:3	94-4496	5	Screw-PPH
20:2	105-3543	1	Seal-Chute
20:3	55-9540-03	1	Retainer-Seal, Chute
20:4	3290-474	8	Palnut

Ref	Part No.	Qty.	Description
20:5	106-4722	1	Decal - Upper Shroud (Ccr 3650 Es)
21	32144-112	2	Screw-HWH
24	100-9889	2	Nut-Speed

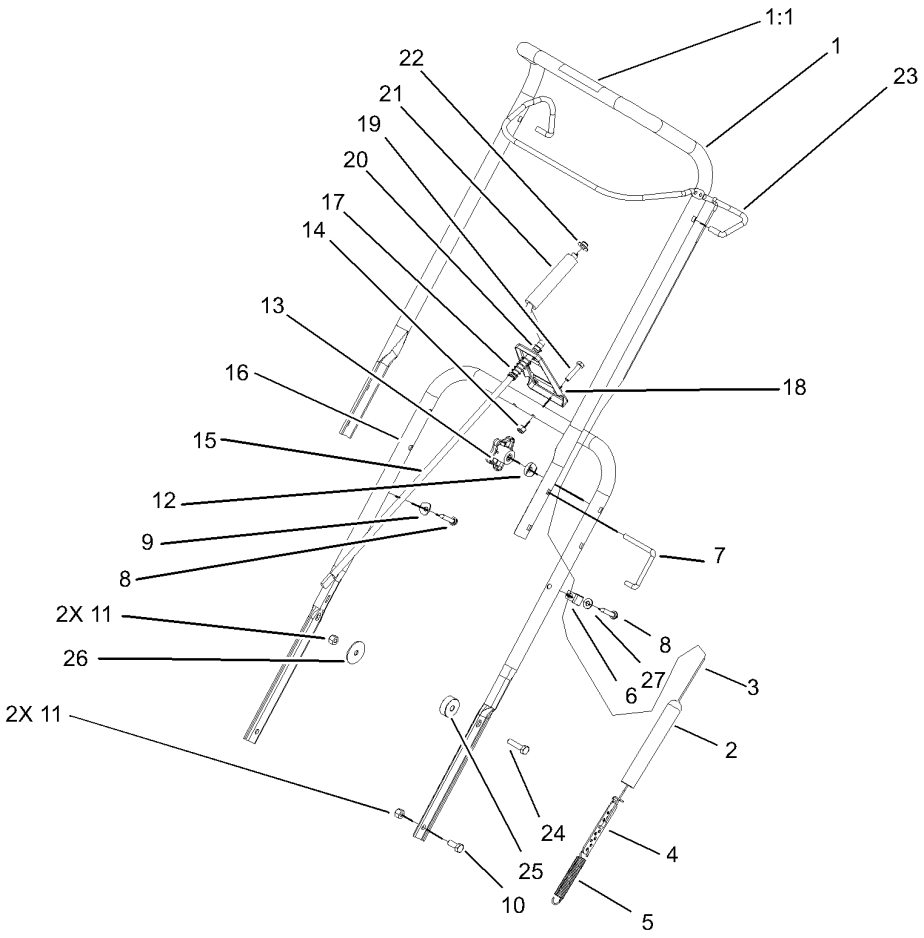

Handle Assembly

Ref	Part No.	Qty.	Description
1	95-2669	1	Handle-Upper W/Decal ASM
1:1	104-2775	1	Decal-Drive, Rotor
2	55-9390	1	Cover-Spring
3	55-9322	1	Cable-Clutch
4	55-9380	1	Adjuster-Cable
5	55-9270	1	Spring-Extension
6	2412-91	1	Clamp
7	98-2266	2	Lock-Handle
8	61-8640	2	Screw
9	3-7501	1	Washer
10	322-3	2	Screw-HH
11	3296-29	4	Nut-Lock, NI
12	75-9130	2	Washer-Curved
13	106-4161	2	Knob-Handle
14	3296-42	2	Nut-Lock, NI
15	55-9140	1	Rod-Crank, Chute
16	55-9121-03	1	Handle-Lower
17	104-8664	1	Spring-Compression
18	55-9090-03	1	Support-Crank, Chute
19	321-8	2	Screw-HH
20	256-249	1	Bushing
21	40-8230	1	Grip-Chute Control
22	3290-320	1	Retainer-Push On
23	100-5473-03	1	Bail-Control

Ref	Part No.	Qty.	Description
24	322-6	2	Screw-HH
25	105-1961	2	Spacer
26	3256-68	2	Washer-Flat
27	3256-22	1	Washer-Flat

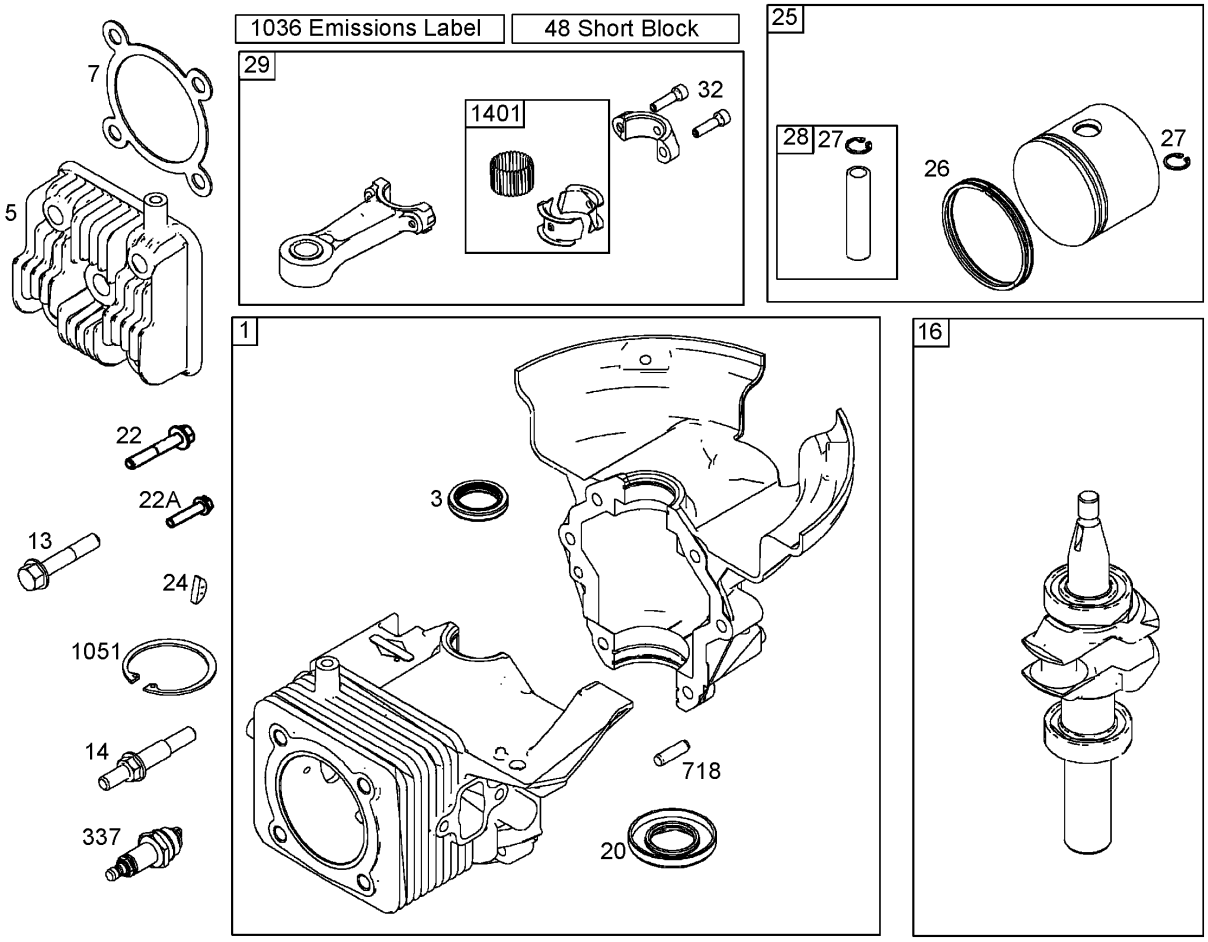

Cylinder, Piston, and Connecting Rod Assemblies
Briggs and Stratton 084233-0198-E1

Ref	Part No.	Qty.	Description
❸1	801322	1	Cylinder ASM
❸3	801262	1	Seal-Oil
❸5	801283	1	Head-Cylinder
❸7	801263	1	Gasket-Head, Cylinder
❸13	801264	1	Screw (Cylinder Head)
❸14	801265	1	Stud (Cylinder Head)
❸16	801220	1	Crankshaft
❸20	801261	1	Seal-Oil
❸22	801266	1	Screw (Crankcase Cover And Sump)
❸22A	801271	1	Screw (Crankcase Cover And Sump)
❸24	801234	1	Key-Flywheel
❸25	801279	1	Piston ASM
❸26	801280	1	Ring Set
❸27	801275	1	Lock-Pin, Piston
❸28	801276	1	Pin-Piston
❸29	801277	1	Rod-Connecting
❸32	801278	1	Screw
❸48	801285	1	Short Block
❸337	801254	1	Plug-Spark
❸718	690959	1	Pin-Locating
❸1036	801294	1	Label-Emissions
❸1051	801274	1	Ring-Retaining

Ref	Part No.	Qty.	Description
❸1401	801290	1	Roller-Strip

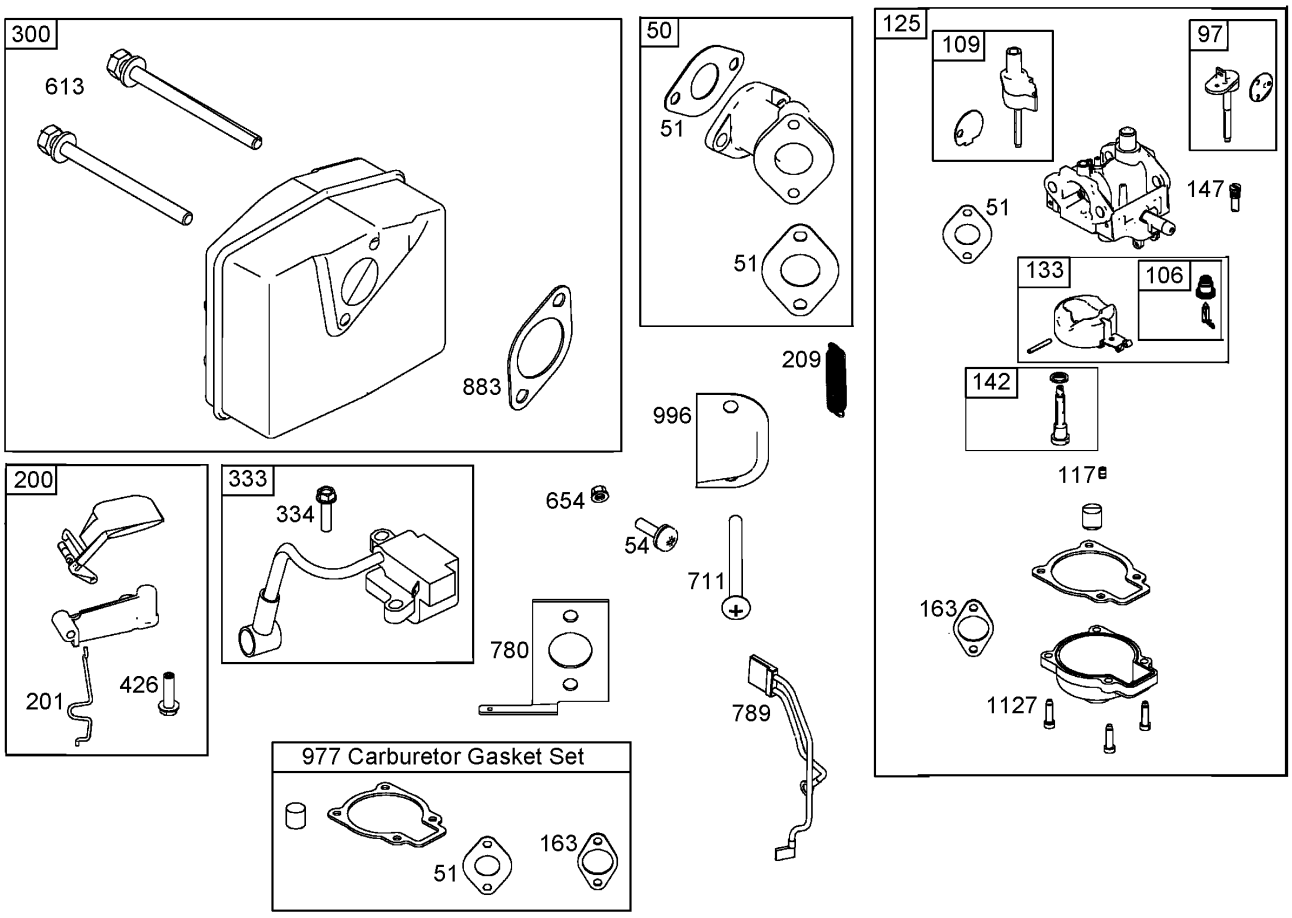

Muffler, Carburetor, and Intake Manifold Assemblies
Briggs and Stratton 084233-0198-E1

Ref	Part No.	Qty.	Description
❸50	801232	1	Manifold-Intake
❸51	801224	1	Gasket-Intake
❸54	801230	1	Screw (Intake Manifold)
❸97	801306	1	Shaft-Throttle
❸106	801317	1	Seat-Inlet
❸109	801307	1	Shaft-Choke
❸117	801310	1	Jet-Main
❸125	801233	1	Carburetor
❸133	801316	1	Float-Carburetor
❸142	801313	1	Nozzle-Carburetor
❸147	801308	1	Jet-Pilot
❸163	801227	1	Gasket-Cleaner, Air
❸200	801289	1	Blade-Governor
❸201	801225	1	Link-Vane, Air
❸209	801223	1	Spring-Governor
❸300	801250	1	Muffler
❸333	801268	1	Armature-Magneto
❸334	801267	1	Screw
❸426	801231	1	Screw
❸613	801251	1	Screw
❸654	801324	1	Nut (Intake Manifold) (Use Before Engine Code Date 05042600)
❸711	801229	1	Screw
❸780	801228	1	Anchor-Spring

Ref	Part No.	Qty.	Description
❸789	801253	1	Wire ASM
❸883	801252	1	Gasket-Exhaust
❸977	801312	1	Gasket Set-Carburetor
❸996	801226	1	Shield-Carburetor
❸1127	801318	1	Screw

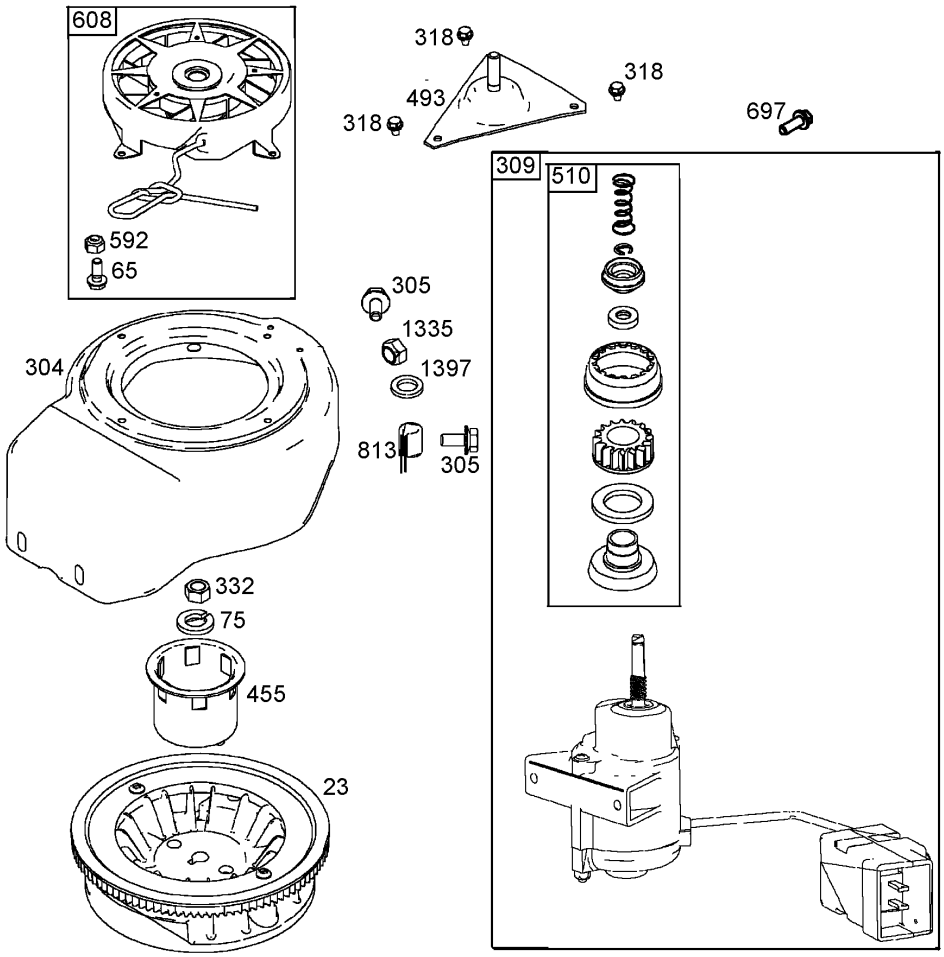

Flywheel, Blower Housing, and Starter Assemblies
Briggs and Stratton 084233-0198-E1

Ref	Part No.	Qty.	Description
❸23	801246	1	Flywheel
❸65	801243	1	Screw
❸75	801237	1	Washer
❸304	801236	1	Housing-Blower
❸305	801239	1	Screw (Blower Housing)
❸309	801247	1	Motor-Starter
❸318	801241	1	Screw
❸332	801238	1	Nut
❸455	801235	1	Cup-Flywheel
❸493	801240	1	Bracket-Mounting
❸510	801293	1	Drive-Starter
❸592	801244	1	Nut
❸608	801242	1	Starter-Rewind
❸697	801248	1	Screw (Starter Motor)
❸813	801249	1	Clamp
❸1335	801269	1	Nut (Blower Housing)
❸1397	801270	1	Washer

NOTES

NOTES

NOTES


TORO®