Form Number 3353-580 Rev C

# CCR™ 3650 GTS® Snowthrower

**Model No. 38517 - 260000001 and up.**

## Parts Catalog

**Ordering Replacement Parts**

To order replacement parts, please supply the part number, the quantity, and the description of each part desired.

**Understanding Reference Numbers**

Each Identified part in an illustration has a reference number. The reference number for a part also appears in the parts list, along with other information about the part.

This catalog uses two special reference number formats, one to indicate parts in a service assembly and another to indicate the quantity of a given part in an illustration.

**Service Assembly Reference Numbers**

Parts in service assemblies have reference numbers in the form a:b. The a represents the reference number of the entire service assembly and the b represents a sequential number unique to each part within the service assembly.

For example, a wheel assembly might be identified by reference number 6, the tire by 6:1, the valve by 6:2, and the wheel by 6:3. When you order the assembly identified by reference number 6, you receive all parts identified by reference numbers 6:1, 6:2, and 6:3. However, you may also order any part individually. Reference numbers of this type appear in illustrations and in part lists.

**Reference Numbers Indicating Quantity**

In an illustration, if a reference number indicates more than one part, the reference number has the form nX y. The n represents the quantity of the part, the X is the multiplication symbol, and the y represents the reference number.

For example, in an illustration, the reference number 2X 37 means that two of the parts identified by reference number 37 are indicated.

© The Toro Company - 2006
All Rights Reserved

Register your product at www.Toro.com

# Contents


| Description | Page |
|---|---|
| Rotor Housing and Scraper Assembly | 3 |
| Impeller Drive Assembly | 4 |
| Chute Assembly | 5 |
| Rotor Assembly | 6 |
| Engine, Gas Tank and Frame Assembly | 7 |
| Shroud and Control Panel Assembly | 8 |
| Handle Assembly | 9 |
| Cylinder, Piston, and Connecting Rod Assemblies Briggs and Stratton 084232-0121-E1 | 10 |
| Muffler, Carburetor, and Intake Manifold Assemblies Briggs and Stratton 084232-0121-E1 | 11 |
| Flywheel, Blower Housing and Starter Assemblies Briggs and Stratton 084232-0121-E1 | 12 |


# Part Description Abbreviations

Part descriptions in this catalog may include the following abbreviations.

| | |
|---|---|
| AR | as required |
| ASM | assembly |
| BBC | blade brake clutch |
| CARR | carriage |
| DEG | degrees |
| EXT | external |
| FH | flat head |
| GA | gauge |
| HF | hex flange |
| HH | hex head |
| HHF | hex head flange |
| HHFTF | hex head flange thread forming |
| HJ | hex jam |
| HLH | hex lag head |
| HOC | height-of-cut |
| HSBH | hex socket button head |
| HSFH | hex socket flat head |
| HSH | hex socket head |
| HWH | hex washer head |
| HWHTF | hex washer head thread forming |
| HYD | hydraulic |
| INC | incorporated |
| LH | left hand |
| NI | nylon insert |
| NPTF | national pipe thread fine |
| PFH | phillips flat head |
| PPH | phillips pan head |
| PPHTF | phillips pan head thread forming |
| PRH | phillips round head |
| PTH | phillips truss head |
| PTO | power-take-off |
| RH | right hand |
| ROPS | roll-over-protection-system |
| SFH | slotted fillister head |
| SHH | slotted hex head |
| SHWH | slotted hex washer head |
| SPH | slotted pan head |
| SQH | square head |
| SRH | slotted round head |
| STD | standard |
| TAP | self tapping |
| TTH | torx truss head |

# Footnotes

❶ Not serviced separately

❷ Obtain from your local Briggs & Stratton dealer

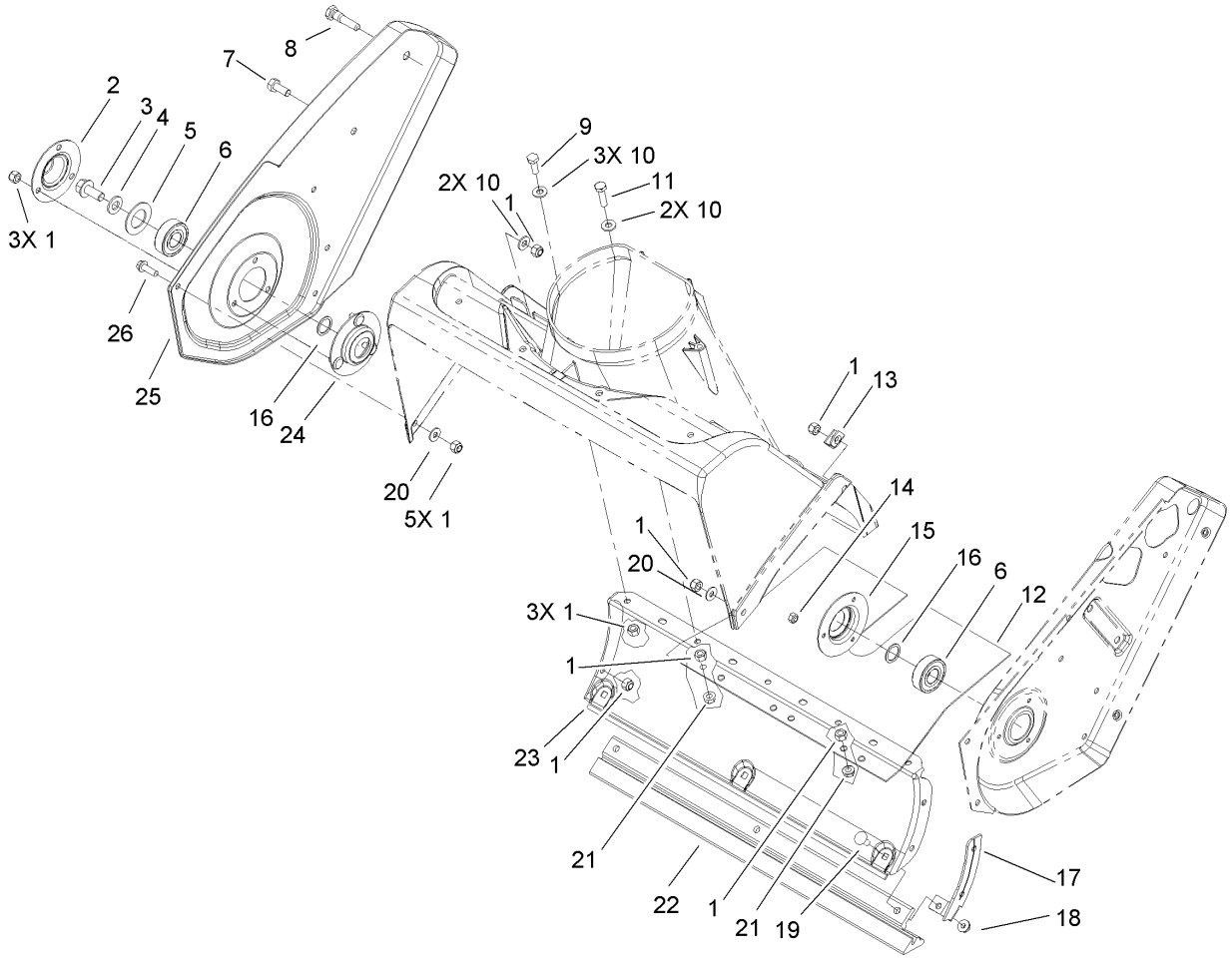


# Rotor Housing and Scraper Assembly

| Ref | Part No. | Qty. | Description |
|---|---|---|---|
| 1 | 3296-42 | 17 | Nut-Lock, NI |
| 2 | 52-7290-03 | 1 | Retainer-Bearing |
| 3 | 3234-25 | 1 | Screw-HHF |
| 4 | 3256-24 | 1 | Washer-Flat |
| 5 | 52-7270 | 1 | Washer-Rubber |
| 6 | 100-1048 | 2 | Bearing-Ball |
| 7 | 322-43 | 1 | Screw-HH |
| 8 | 38-8211 | 1 | Pin-Rotor |
| 9 | 321-4 | 3 | Screw-HH |
| 10 | 3256-22 | 7 | Washer-Flat |
| 11 | 321-6 | 2 | Screw-HH |
| 12 | 55-9512 | 1 | Cover-Bottom |
| 13 | 55-9430 | 1 | Bracket-Housing |
| 14 | 3296-2 | 3 | Nut-Lock |
| 15 | 38-8620 | 1 | Flange-Bearing |
| 16 | 52-7280 | 2 | Washer-Thrust |
| 17 | 56-2610 | 1 | Bracket-Housing, Lower |
| 18 | 32149-2 | 3 | Nut-Keps |
| 19 | 3229-11 | 3 | Screw-CARR |
| 20 | 3256-1 | 2 | Washer-Flat |
| 21 | 32128-10 | 2 | Nut-Lock, HHF |
| 22 | 55-8760 | 1 | Scraper |
| 23 | 105-1967-03 | 1 | Housing-Lower |
| 24 | 52-9110 | 1 | Flange-Bearing |

| Ref | Part No. | Qty. | Description |
|---|---|---|---|
| 25 | 105-1952-03 | 1 | Sideplate-Right |
| 26 | 32105-15 | 5 | Screw |

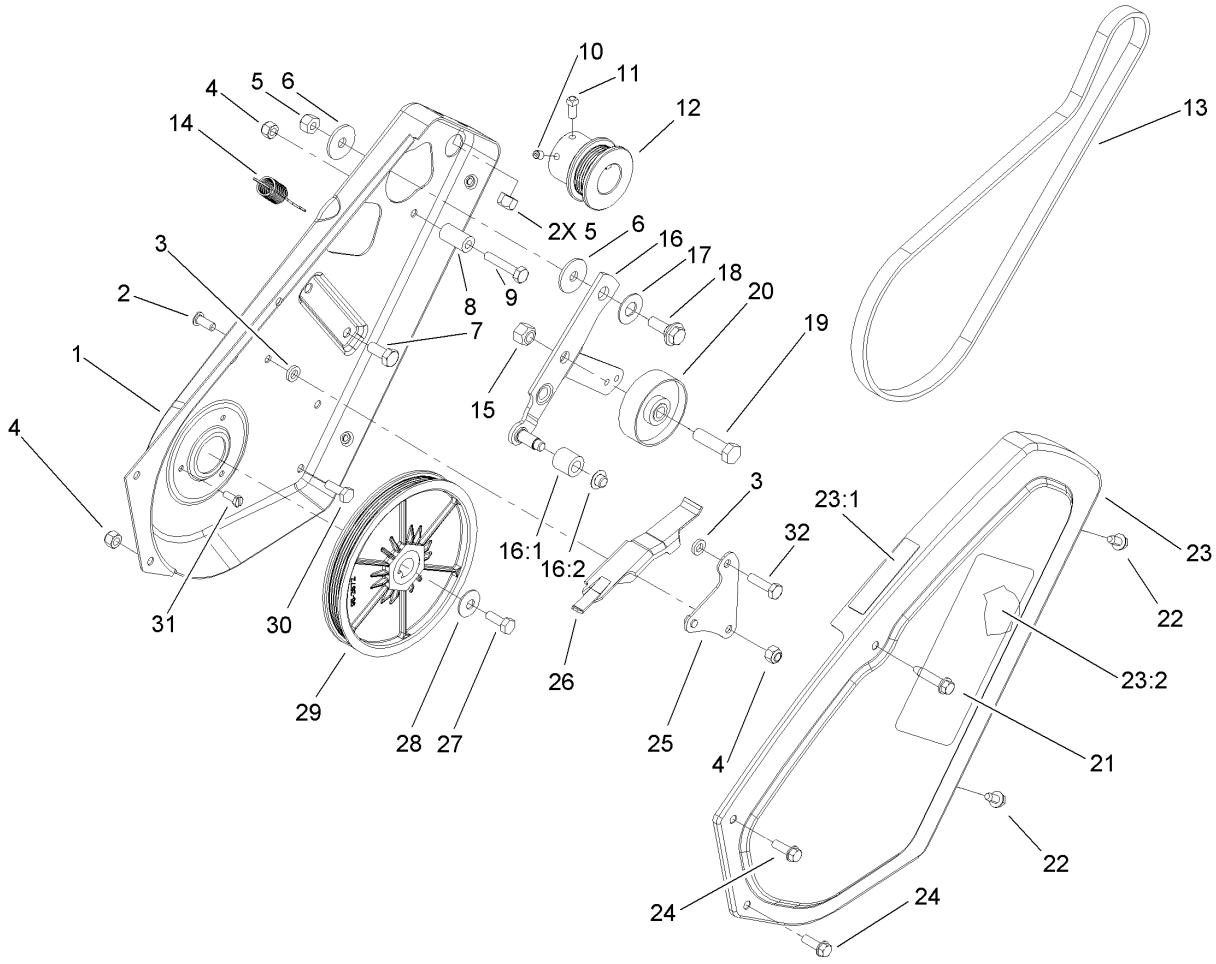


# Impeller Drive Assembly

| Ref | Part No. | Qty. | Description |
|---|---|---|---|
| 1 | 55-8851-03 | 1 | Plate-Side, LH |
| 2 | 3274-31 | 1 | Screw-HSBH |
| 3 | 55-9620 | 2 | Spacer-Plate, Pivot |
| 4 | 3296-42 | 3 | Nut-Lock, NI |
| 5 | 3296-29 | 3 | Nut-Lock, NI |
| 6 | 5-4460 | 2 | Washer-Pivot |
| 7 | 322-3 | 2 | Screw-HH |
| 8 | 55-9530 | 1 | Sleeve-Guide, Belt |
| 9 | 321-13 | 1 | Screw-HH |
| 10 | 3245-32 | 1 | Screw-HSH |
| 11 | 3241-7 | 1 | Screw-SQH |
| 12 | 95-2673 | 1 | Pulley-Engine |
| 13 | 95-6151 | 1 | Belt-Drive |
| 14 | 55-9280 | 1 | Spring-Extension |
| 15 | 32152-2 | 1 | Nut-Lock, Cone |
| 16 | 105-3542 | 1 | Idler Arm ASM |
| 16:1 | 55-9520 | 1 | Roller-Brake |
| 16:2 | 32112-11 | 1 | Nut-Push |
| 17 | 25-5641 | 1 | Washer |
| 18 | 27-0410 | 1 | Screw-Shoulder |
| 19 | 323-29 | 1 | Screw-HH |
| 20 | 55-9290 | 1 | Pulley-Idler |
| 21 | 36-3860 | 1 | Screw-HWH, TAP |
| 22 | 12-3270 | 2 | Screw |

| Ref | Part No. | Qty. | Description |
|---|---|---|---|
| 23 | 105-1997 | 1 | Cover-Drive |
| 23:1 | 104-2767 | 1 | Decal-Warning |
| 23:2 | 60-9480 | 1 | Decal |
| 24 | 32105-15 | 2 | Screw |
| 25 | 55-9570 | 1 | Pivot Plate ASM |
| 26 | 55-9550 | 1 | Brake-Arm |
| 27 | 321-30 | 1 | Screw-HH |
| 28 | 3290-456 | 1 | Washer-Belleville |
| 29 | 95-2672 | 1 | Pulley Rotor ASM |
| 30 | 321-4 | 2 | Screw-HH |
| 31 | 32105-8 | 3 | Screw-SHH |
| 32 | 321-6 | 1 | Screw-HH |

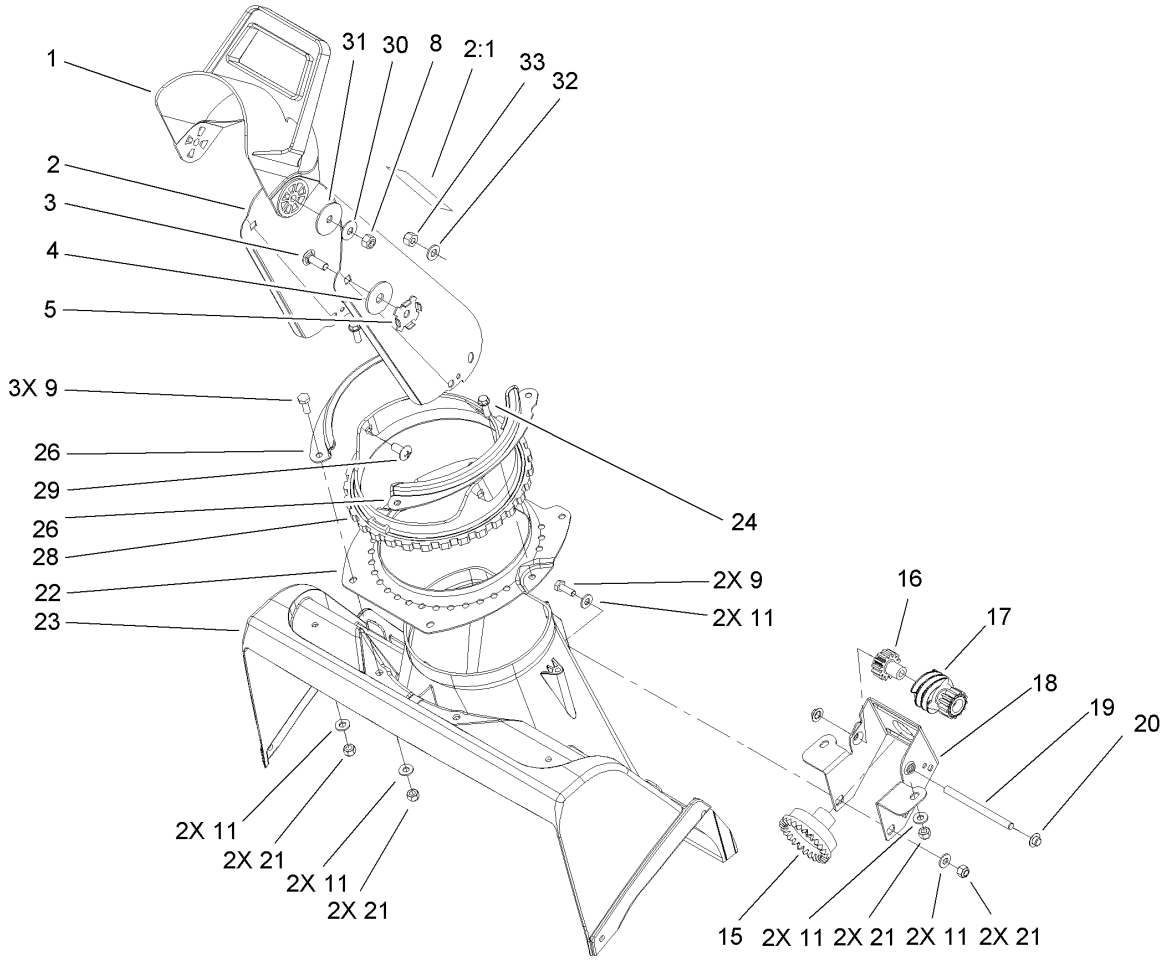


# Chute Assembly

| Ref | Part No. | Qty. | Description |
|---|---|---|---|
| 1 | 56-2680 | 1 | Chute-Deflector |
| 2 | 104-4115 | 1 | Chute ASM |
| 2:1 | 104-4135 | 1 | Decal-Danger |
| 3 | 3230-22 | 2 | Screw-CARR |
| 4 | 20-4320 | 2 | Washer-Rubber |
| 5 | 55-8950 | 2 | Plate-Friction |
| 8 | 3296-29 | 2 | Nut-Lock, NI |
| 9 | 321-4 | 5 | Screw-HH |
| 11 | 3256-22 | 10 | Washer-Flat |
| 15 | 55-8740 | 1 | Gear-Face |
| 16 | 55-8750 | 1 | Gear-Spur, Spacer |
| 17 | 105-3512 | 1 | Gear-Spur/Worm |
| 18 | 105-3513 | 1 | Bracket-Gear, Chute |
| 19 | 55-9150 | 1 | Shaft-Gear, Worm |
| 20 | 32112-11 | 2 | Nut-Push |
| 21 | 3296-42 | 8 | Nut-Lock, NI |
| 22 | 55-8921-03 | 1 | Ring-Support, Chute |
| 23 | 105-1950 | 1 | Housing-Rotor, Upper |
| 24 | 46-8091 | 2 | Screw-HWH |
| 26 | 55-8910-03 | 2 | Ring-Retainer, Chute |
| 28 | 55-8720 | 1 | Ring-Gear, Chute |
| 29 | 100-5486 | 3 | Screw-Truss Hd, Phillips |
| 30 | 3290-456 | 2 | Washer-Belleville |
| 31 | 3256-68 | 2 | Washer-Flat |

| Ref | Part No. | Qty. | Description |
|---|---|---|---|
| 32 | 3256-70 | 3 | Washer-Flat |
| 33 | 3296-47 | 3 | Nut-Lock, NI |

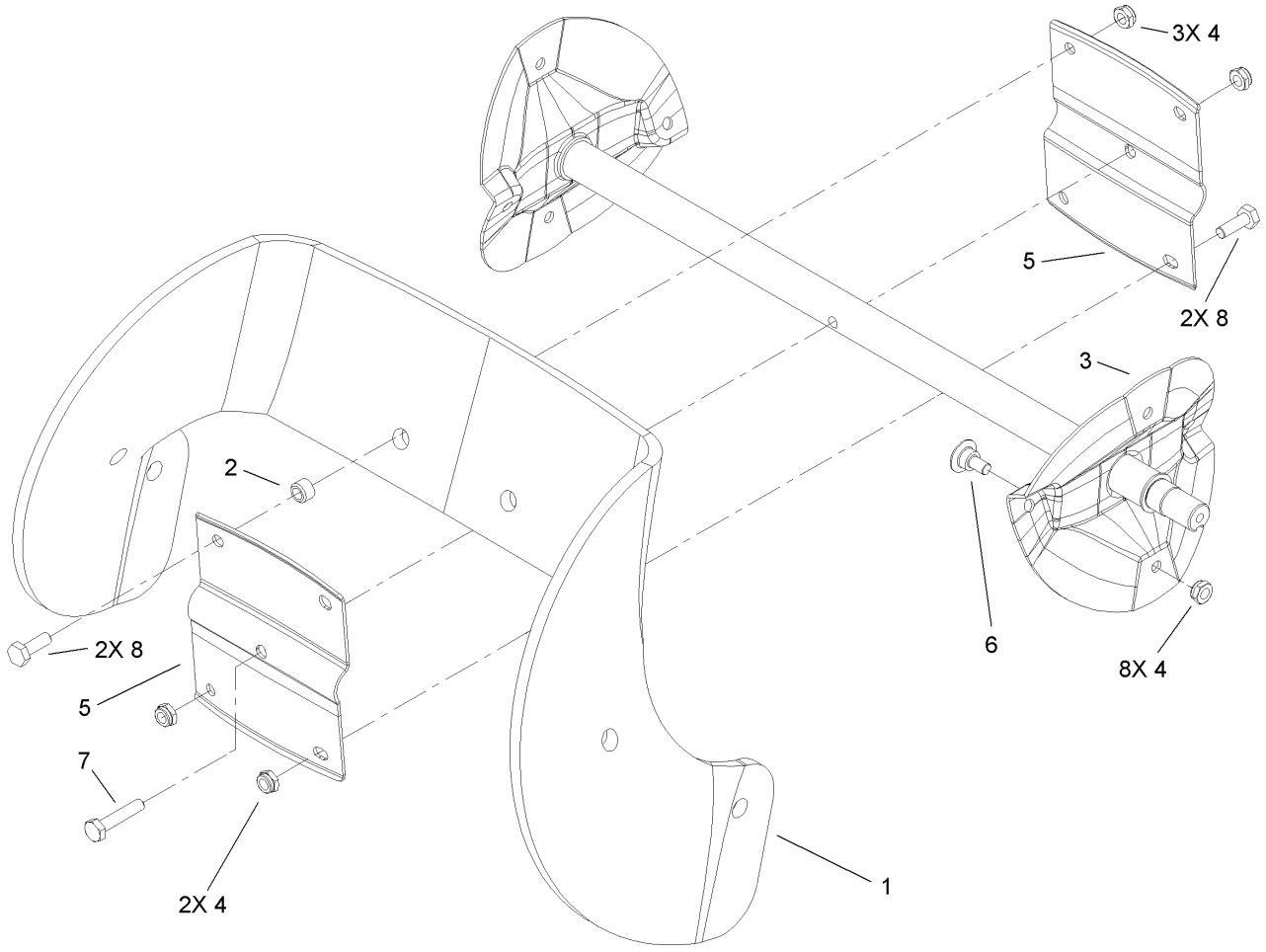


# Rotor Assembly

| Ref | Part No. | Qty. | Description |
|---|---|---|---|
| 1 | 99-9313 | 2 | Blade-Rotor |
| 2 | 55-9370 | 4 | Spacer-Blade, Rotor |
| 3 | 100-5478-03 | 1 | Rotor ASM |
| 4 | 3296-56 | 13 | Nut-Lock, NI |
| 5 | 66-6600-03 | 2 | Half-Rotor |
| 6 | 84-1971 | 8 | Screw |
| 7 | 321-8 | 1 | Screw-HH |
| 8 | 321-4 | 4 | Screw-HH |

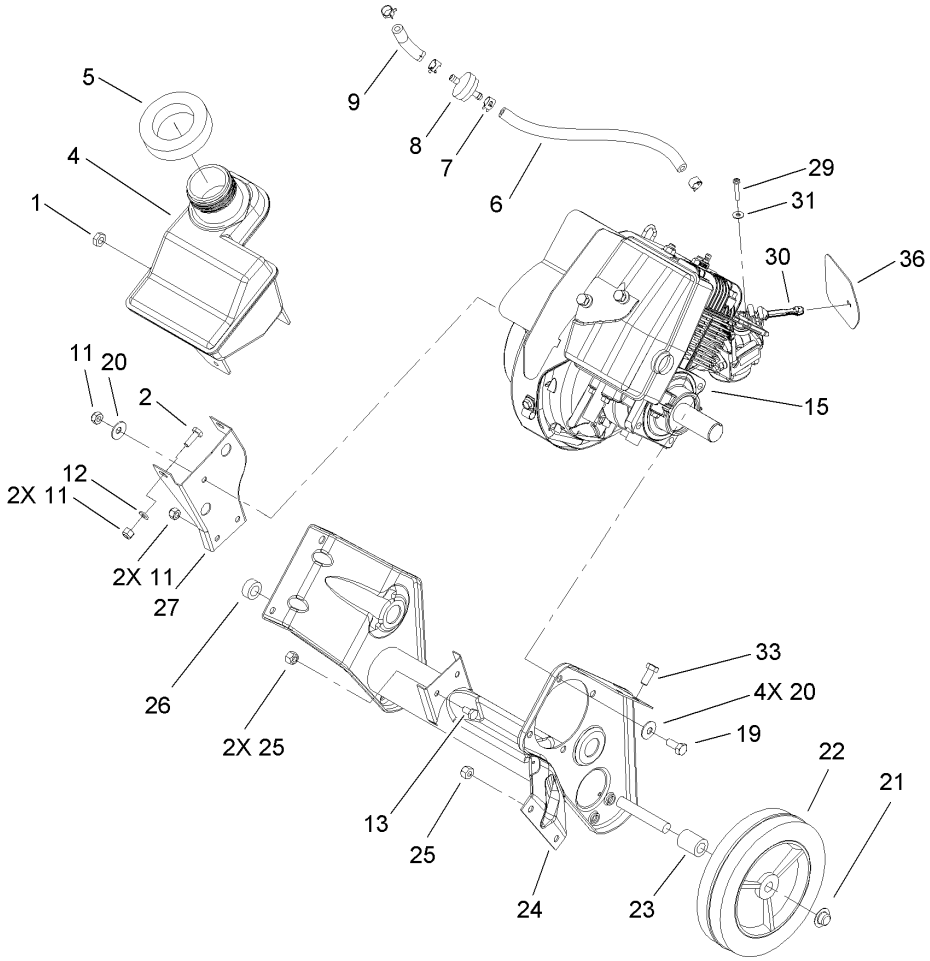


# Engine, Gas Tank and Frame Assembly

| Ref | Part No. | Qty. | Description |
|---|---|---|---|
| 1 | 32152-8 | 1 | Nut-Lock, Cone |
| 2 | 321-4 | 2 | Screw-HH |
| 4 | 105-8952 | 1 | Tank-Gas |
| 5 | 55-9310 | 1 | Seal-Foam |
| 6 | 49-2482 | 1 | Line-Fuel |
| 7 | 2412-98 | 4 | Clamp |
| 8 | 56-6360 | 1 | Filter-Fuel |
| 9 | 94-9932 | 1 | Hose-Fuel |
| 11 | 3296-42 | 5 | Nut-Lock, NI |
| 12 | 3256-22 | 2 | Washer-Flat |
| 13 | 321-2 | 2 | Screw-HH |
| ❶❷15 | | 1 | Engine-Briggs And Stratton, 084232-0121-E1 |
| 19 | 322-3 | 4 | Screw-HH |
| 20 | 3290-456 | 5 | Washer-Belleville |
| 21 | 32112-14 | 2 | Nut-Push |
| 22 | 66-6510 | 2 | Wheel |
| 23 | 66-6501 | 1 | Spacer-Wheel |
| 24 | 105-1965-03 | 1 | Frame |
| 25 | 3296-29 | 3 | Nut-Lock, NI |
| 26 | 66-6500 | 1 | Spacer-Wheel |
| 27 | 105-1968-03 | 1 | Bracket-Support, Recoil |
| 29 | 32144-97 | 1 | Screw-PPH, Plastite |
| 30 | 104-0878 | 1 | Lever-Choke |

| Ref | Part No. | Qty. | Description |
|---|---|---|---|
| 31 | 3256-14 | 1 | Washer-Flat |
| 33 | 322-43 | 2 | Screw-HH |
| 36 | 108-7340 | 1 | Shield-Hole, Choke |

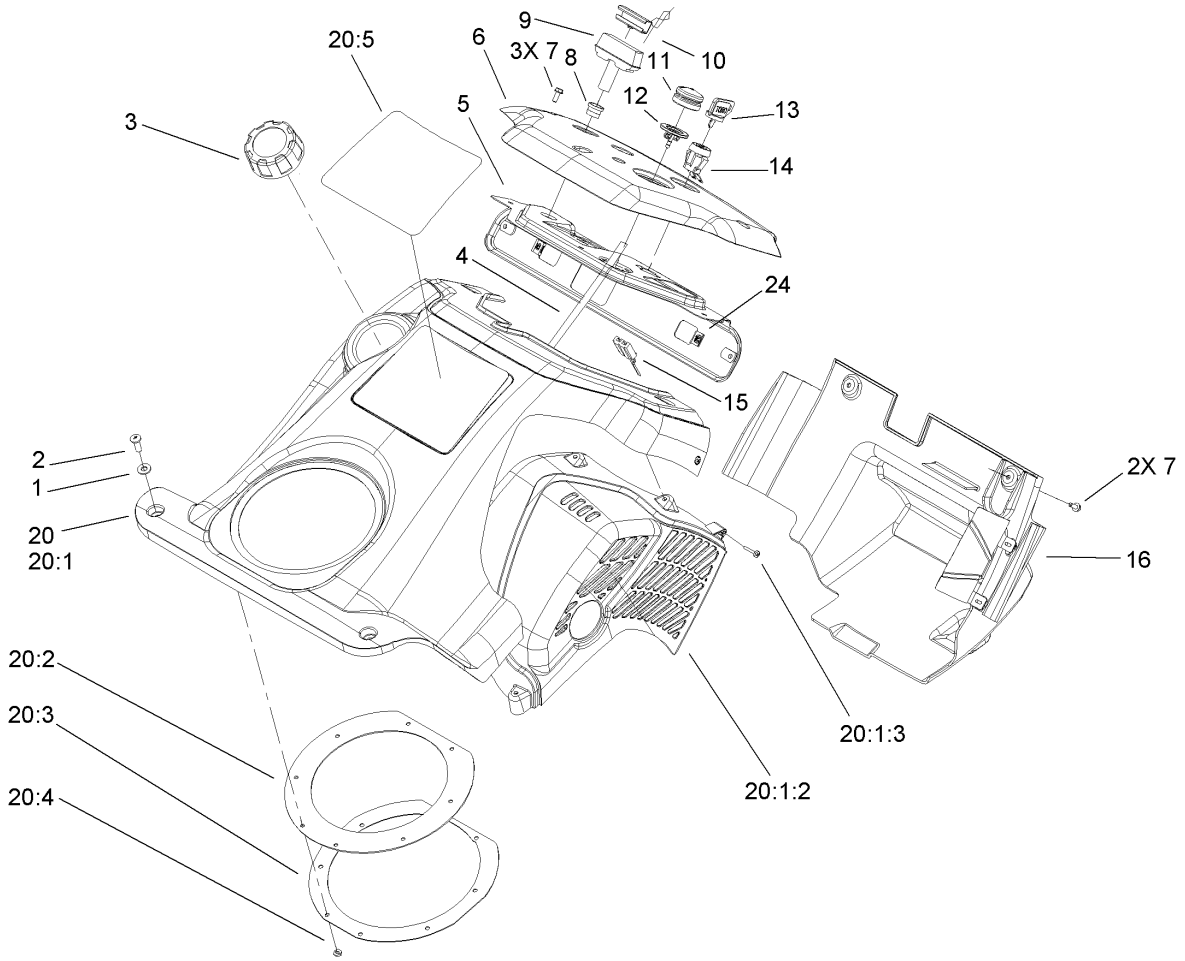


# Shroud and Control Panel Assembly

| Ref | Part No. | Qty. | Description |
|---|---|---|---|
| 1 | 3256-22 | 2 | Washer-Flat |
| 2 | 3250-32 | 2 | Screw-PPH |
| 3 | 104-4133 | 1 | Gas Cap ASM |
| 4 | 98-1372 | 1 | Hose-Primer |
| 5 | 105-1999-03 | 1 | Panel-Support, Control |
| 6 | 105-1955 | 1 | Panel-Control |
| 7 | 32144-112 | 5 | Screw-HWH |
| 8 | 55-9410 | 1 | Guide-Rope, Starter |
| 9 | 612825 | 1 | Handle-Start |
| 10 | 612824 | 1 | Clip-Starter |
| 11 | 66-7460 | 1 | Bulb-Primer |
| 12 | 44-2750 | 1 | Body-Primer |
| 13 | 63-8360 | 1 | Key-Ignition |
| 14 | 40-5940 | 1 | Switch |
| 15 | 218-532 | 1 | Connector-Body |
| 16 | 108-7335 | 1 | Lower Shroud / Baffle ASM |
| 20 | 108-7347 | 1 | Upper Shroud ASM |
| ❶20:1 | | 1 | Shroud-Upper |
| 20:1:2 | 108-7333 | 1 | Shield-Heat |
| 20:1:3 | 94-4496 | 5 | Screw-PPH |
| 20:2 | 105-3543 | 1 | Seal-Chute |
| 20:3 | 55-9540-03 | 1 | Retainer-Seal, Chute |
| 20:4 | 3290-474 | 8 | Palnut |
| 20:5 | 108-5089 | 1 | Decal |

| Ref | Part No. | Qty. | Description |
|---|---|---|---|
| 24 | 100-9889 | 2 | Nut-Speed |

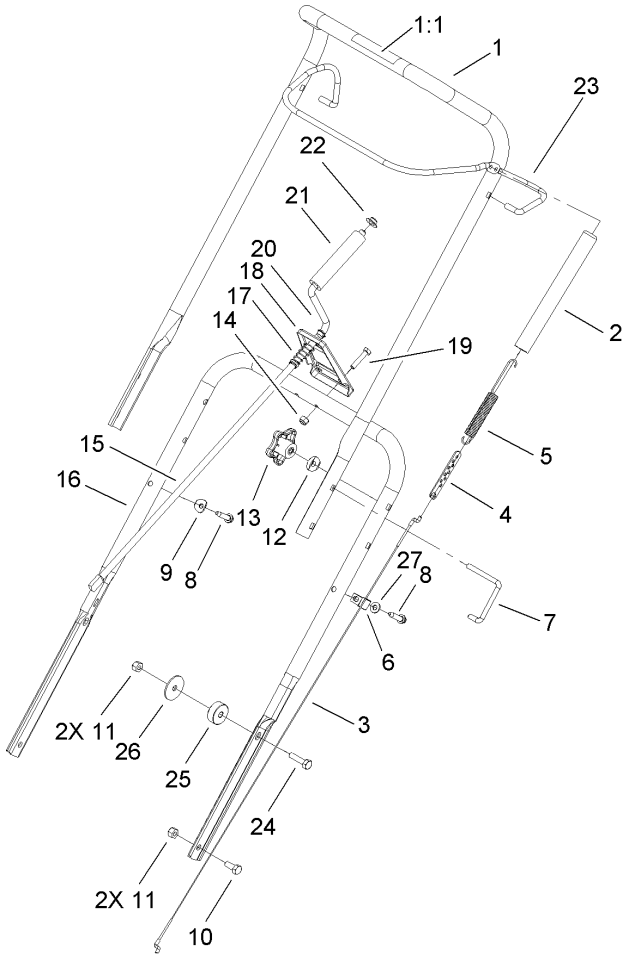


# Handle Assembly

| Ref | Part No. | Qty. | Description |
|---|---|---|---|
| 1 | 95-2669 | 1 | Handle-Upper W/Decal ASM |
| 1:1 | 104-2775 | 1 | Decal-Drive, Rotor |
| 2 | 71-5530 | 1 | Cover-Spring |
| 3 | 110-2182 | 1 | Cable-Clutch |
| 4 | 71-5330 | 1 | Adjuster-Cable, Clutch |
| 5 | 110-2181 | 1 | Spring-Extension |
| 6 | 2412-91 | 1 | Clamp |
| 7 | 98-2266 | 2 | Lock-Handle |
| 8 | 36-3860 | 2 | Screw-HWH, TAP |
| 9 | 3-7501 | 1 | Washer |
| 10 | 322-3 | 2 | Screw-HH |
| 11 | 3296-29 | 4 | Nut-Lock, NI |
| 12 | 107-3844 | 2 | Washer |
| 13 | 106-4161 | 2 | Knob-Handle |
| 14 | 3296-42 | 2 | Nut-Lock, NI |
| 15 | 55-9140 | 1 | Rod-Crank, Chute |
| 16 | 55-9121-03 | 1 | Handle-Lower |
| 17 | 104-8664 | 1 | Spring-Compression |
| 18 | 55-9090-03 | 1 | Support-Crank, Chute |
| 19 | 321-8 | 2 | Screw-HH |
| 20 | 256-249 | 1 | Bushing |
| 21 | 40-8230 | 1 | Grip-Chute Control |
| 22 | 3290-320 | 1 | Retainer-Push On |
| 23 | 100-5473-03 | 1 | Bail-Control |

| Ref | Part No. | Qty. | Description |
|---|---|---|---|
| 24 | 322-6 | 2 | Screw-HH |
| 25 | 105-1961 | 2 | Spacer |
| 26 | 3256-68 | 2 | Washer-Flat |
| 27 | 3256-22 | 1 | Washer-Flat |

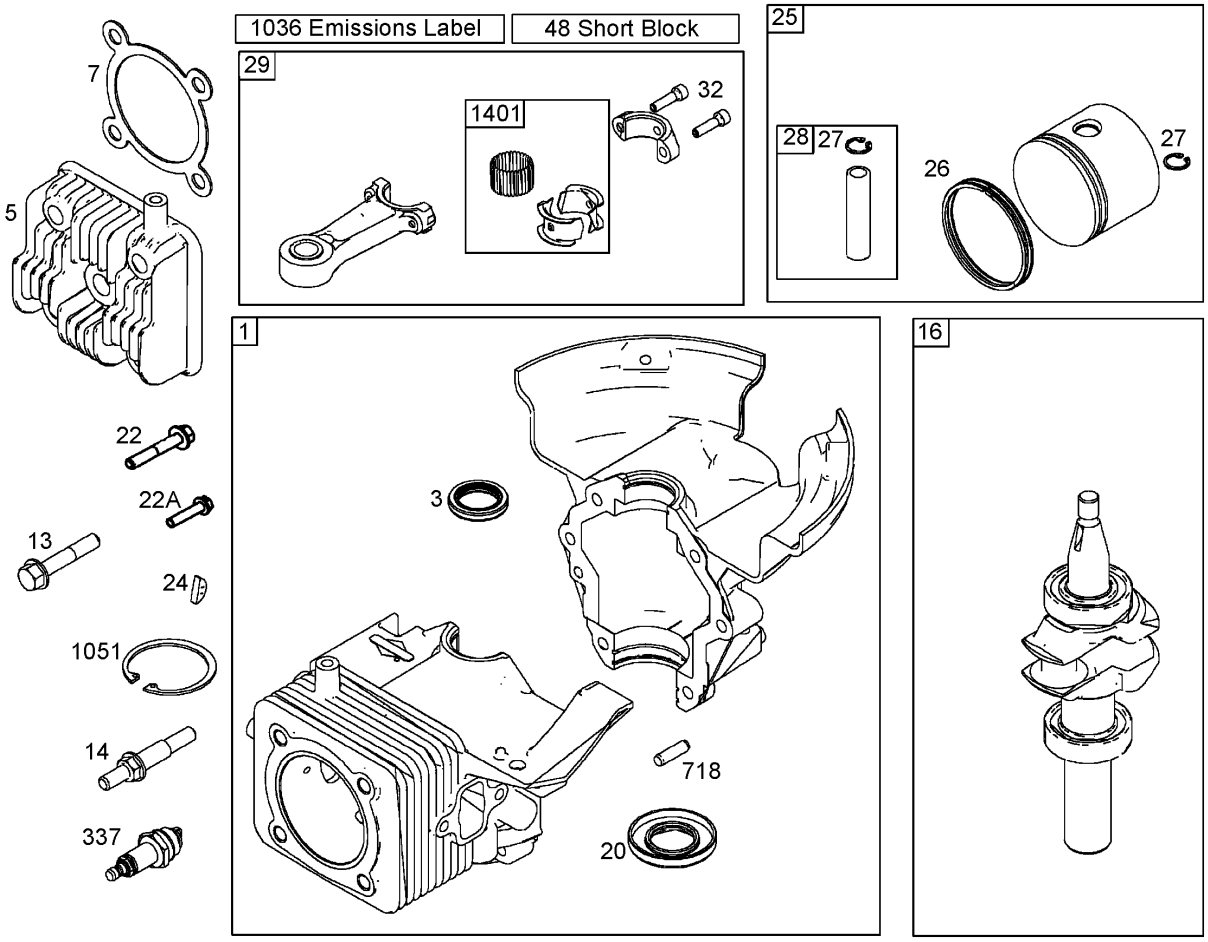


# Cylinder, Piston, and Connecting Rod Assemblies
# Briggs and Stratton 084232-0121-E1

| Ref | Part No. | Qty. | Description |
|---|---|---|---|
| ❷1 | 801260 | 1 | Cylinder ASM |
| ❷3 | 801262 | 1 | Seal-Oil |
| ❷5 | 801283 | 1 | Head-Cylinder |
| ❷7 | 801263 | 1 | Gasket-Head, Cylinder |
| ❷13 | 801264 | 1 | Screw (Cylinder Head) |
| ❷14 | 801265 | 1 | Stud (Cylinder Head) |
| ❷16 | 801220 | 1 | Crankshaft |
| ❷20 | 801261 | 1 | Seal-Oil |
| ❷22 | 801266 | 1 | Screw (Crankcase Cover And Sump) |
| ❷22A | 801271 | 1 | Screw (Crankcase Cover And Sump) |
| ❷24 | 801234 | 1 | Key-Flywheel |
| ❷25 | 801279 | 1 | Piston ASM |
| ❷26 | 801280 | 1 | Ring Set |
| ❷27 | 801275 | 1 | Lock-Pin, Piston |
| ❷28 | 801276 | 1 | Pin-Piston |
| ❷29 | 801277 | 1 | Rod-Connecting |
| ❷32 | 801278 | 1 | Screw |
| ❷48 | 801284 | 1 | Short Block |
| ❷337 | 801254 | 1 | Plug-Spark |
| ❷718 | 690959 | 1 | Pin-Locating |
| ❷1036 | 801294 | 1 | Label-Emissions |
| ❷1051 | 801274 | 1 | Ring-Retaining |

| Ref | Part No. | Qty. | Description |
|---|---|---|---|
| ❷1401 | 801290 | 1 | Roller-Strip |

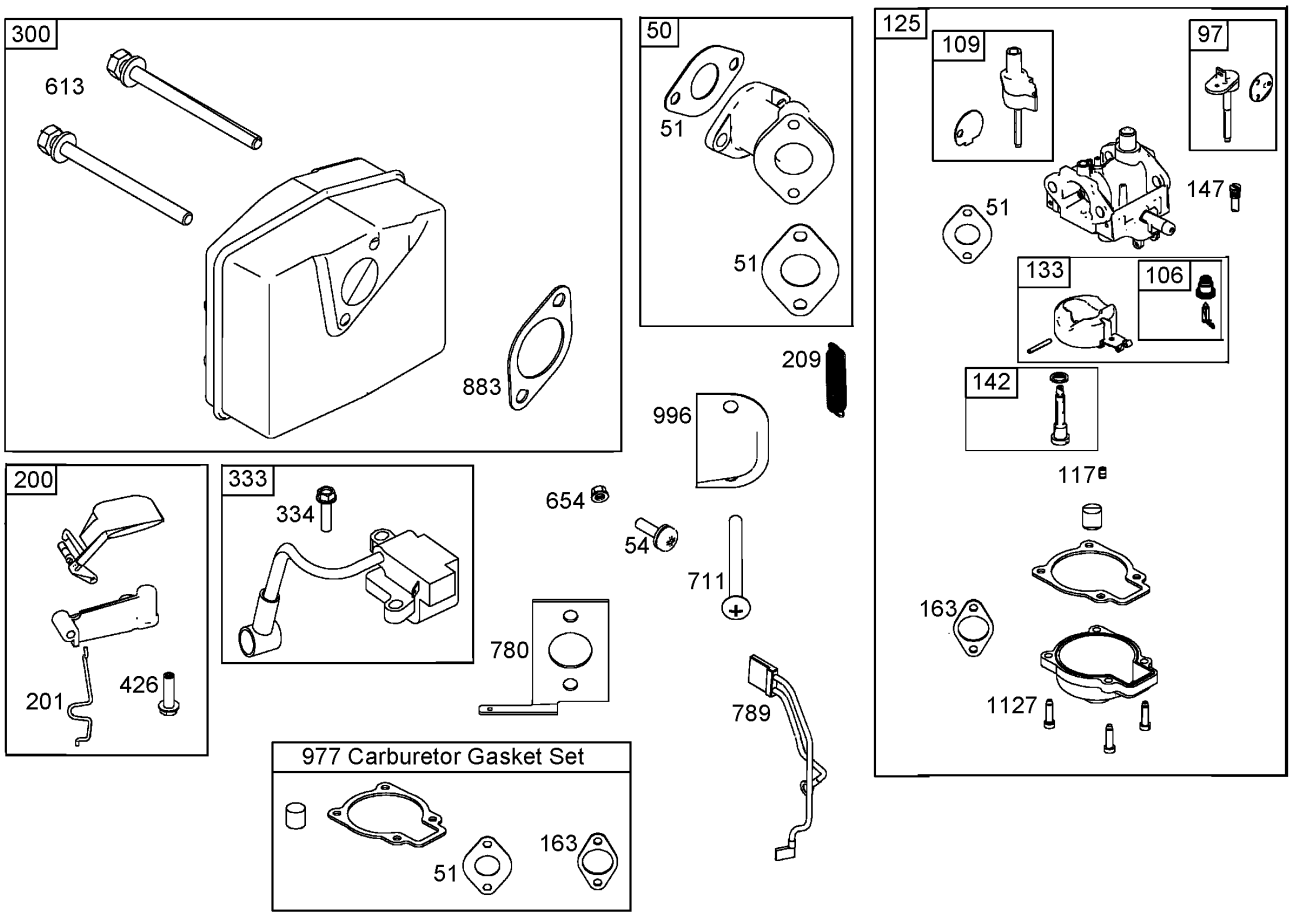


# Muffler, Carburetor, and Intake Manifold Assemblies
# Briggs and Stratton 084232-0121-E1

| Ref | Part No. | Qty. | Description |
|---|---|---|---|
| ❷50 | 801232 | 1 | Manifold-Intake |
| ❷51 | 801224 | 1 | Gasket-Intake |
| ❷54 | 801230 | 1 | Screw (Intake Manifold) |
| ❷97 | 801306 | 1 | Shaft-Throttle |
| ❷106 | 801317 | 1 | Seat-Inlet |
| ❷109 | 801307 | 1 | Shaft-Choke |
| ❷117 | 801310 | 1 | Jet-Main |
| ❷125 | 801233 | 1 | Carburetor |
| ❷133 | 801316 | 1 | Float-Carburetor |
| ❷142 | 801313 | 1 | Nozzle-Carburetor |
| ❷147 | 801308 | 1 | Jet-Pilot |
| ❷163 | 801227 | 1 | Gasket-Cleaner, Air |
| ❷200 | 801289 | 1 | Blade-Governor |
| ❷201 | 801225 | 1 | Link-Vane, Air |
| ❷209 | 801223 | 1 | Spring-Governor |
| ❷300 | 801250 | 1 | Muffler |
| ❷333 | 801268 | 1 | Armature-Magneto |
| ❷334 | 801267 | 1 | Screw |
| ❷426 | 801231 | 1 | Screw |
| ❷613 | 801251 | 1 | Screw |
| ❷654 | 801324 | 1 | Nut (Intake Manifold) (Used Before Engine Code Date 05042600) |
| ❷711 | 801229 | 1 | Screw |

| Ref | Part No. | Qty. | Description |
|---|---|---|---|
| ❷780 | 801228 | 1 | Anchor-Spring |
| ❷789 | 801253 | 1 | Wire ASM |
| ❷883 | 801252 | 1 | Gasket-Exhaust |
| ❷977 | 801312 | 1 | Gasket Set-Carburetor |
| ❷996 | 801226 | 1 | Shield-Carburetor |
| ❷1127 | 801318 | 1 | Screw |

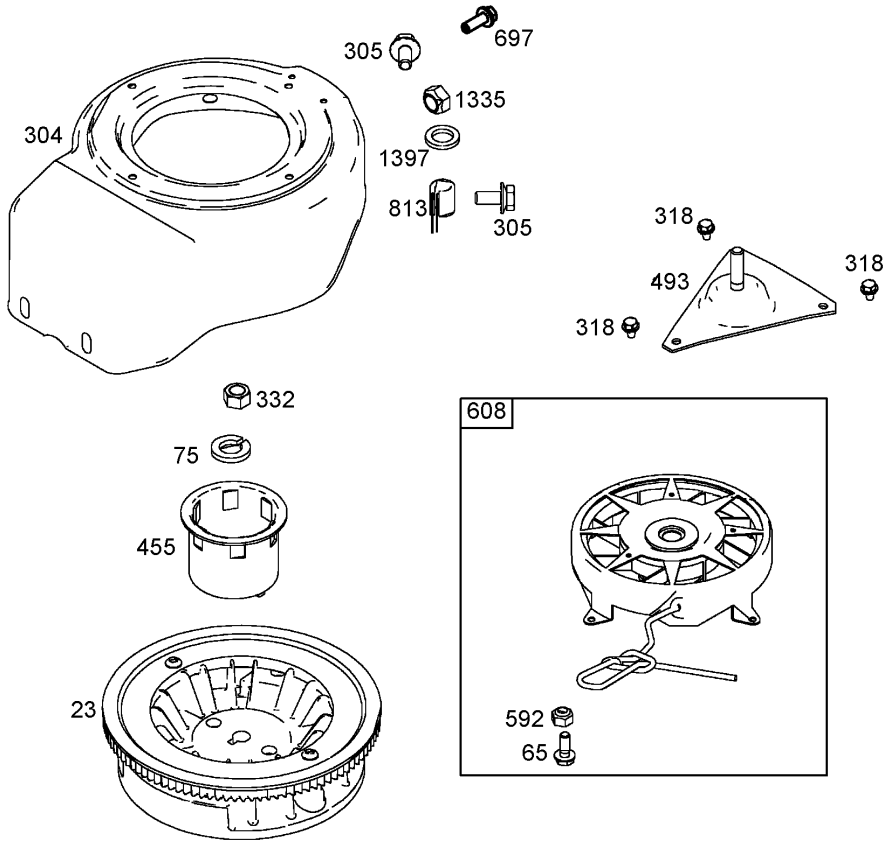


# Flywheel, Blower Housing and Starter Assemblies
# Briggs and Stratton 084232-0121-E1

| Ref | Part No. | Qty. | Description |
|---|---|---|---|
| ❷23 | 801246 | 1 | Flywheel |
| ❷65 | 801243 | 1 | Screw |
| ❷75 | 801237 | 1 | Washer |
| ❷304 | 801257 | 1 | Housing-Blower |
| ❷305 | 801239 | 1 | Screw (Blower Housing) |
| ❷318 | 801241 | 1 | Screw |
| ❷332 | 801238 | 1 | Nut |
| ❷455 | 801235 | 1 | Cup-Flywheel |
| ❷493 | 801240 | 1 | Bracket-Mounting |
| ❷592 | 801244 | 1 | Nut |
| ❷608 | 801242 | 1 | Starter-Rewind |
| ❷697 | 801248 | 1 | Screw (Strater Motor) |
| ❷813 | 801249 | 1 | Clamp |
| ❷1335 | 801269 | 1 | Nut (Blower Housing) |
| ❷1397 | 801270 | 1 | Washer |

# NOTES

# NOTES

# NOTES


TORO®