Form No. 3324–193 Rev. A

# Light Kit

## Greensmaster® 500/800/1000/1600

**Model No. 04058**

**Installation Instructions**

### ⚠ Caution ⚠

**Before servicing or making adjustments to the machine, stop engine and remove the wire from the spark plug.**

**1.** Mount a light bracket on each side of handle with a clamp and two nylon insert locknuts (Fig. 1). Light with On/Off switch to be mounted on right side of handle.

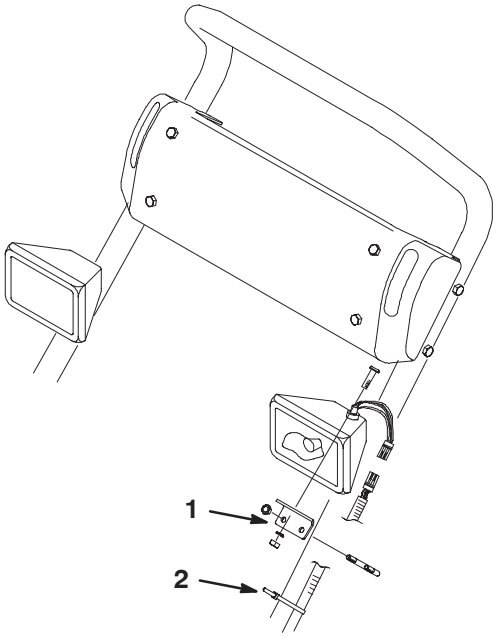


**Figure 1**

1. Light bracket
2. Cable ties

**2.** Position lights approximately 6” below console.

**3.** Plug L.H. light into wire harness, route harness along bottom of console panel and plug into R.H. light. Route harness down R.H. handle to rear of engine.

**4.** Plug (2) harness connectors into the yellow leads coming from engine.

**5.** Plug voltage regulator connector into wire harness connector.

**6.** Place engine wires and voltage regulator wires into R–clamp. Secure R–clamp with a capscrew, (2) flat washers and a jam nut (Fig. 2).

**7.** Mount voltage regulator and voltage regulator strap to R–clamp capscrew and locknut (Fig. 2).

**8.** Mount voltage regulator strap and ring terminal from harness ground wire to engine boss with external tooth lockwashers and capscrew (Fig. 2).

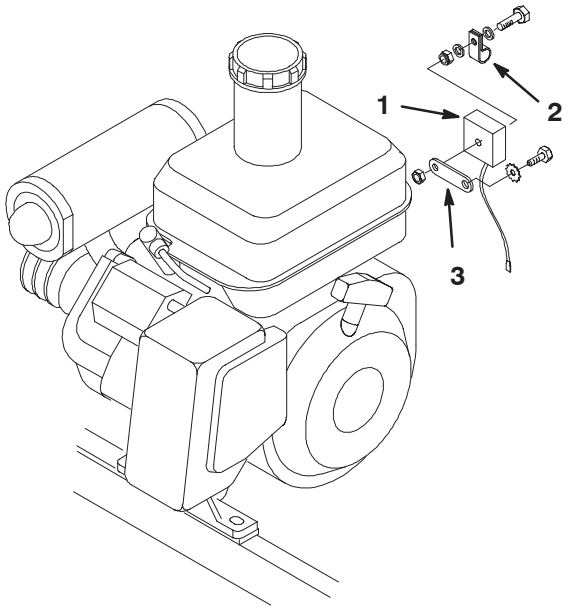


**Figure 2**

1. Voltage regulator
2. R–clamp
3. Voltage regulator strap

**9.** Secure wire harness to handle using nylon cable ties. Check all wires for excess bending, chaffing or interference with mounting parts.

© 2005 by The Toro Company
8111 Lyndale Avenue South
Bloomington, MN 55420-1196



All Rights Reserved
Printed in the USA